COUNTY OF	ITEM NO.	SHEET NO.
CAMPBELL	6-2021.00	R1

Commonwealth of Kentucky
DEPARTMENT OF HIGHWAYS

PLANS OF
PROPOSED PROJECT
CAMPBELL COUNTY
IMNH 4714(034)
I–471 PAVEMENT & BRIDGE REHABILITATION

Preliminary Plans

THIS PROJECT IS FOR PAVEMENT & BRIDGE REHABILITATION

THIS PROJECT IS A FULLY CONTROLLED ACCESS HIGHWAY

THIS PROJECT IS ON THE NATIONAL HIGHWAY SYSTEM

INDEX OF SHEETS

SHEET NO.	DESCRIPTION
R1	LAYOUT SHEET
R2 - R2at	TYPICAL SECTIONS-SUMMARY OF QUANTITIES
R3 - R107	PLAN AND PROFILE SHEETS
R108 - R134	DEVELOPMENT SHEETS
R135 - R144	DETAIL SHEETS
R145 - R303	TRAFFIC CONTROL SHEETS
R304 - R316	COORDINATE CONTROL SHEETS
R317 - R319	PIPE DRAINAGE SHEETS
S1 - S30	STRUCTURE PLANS
T1 - T22	SIGNING PLANS
T23 - T	LIGHTING PLANS
X1 - X103	CROSS SECTION SHEETS

TOTAL SHEETS

(R) ROADWAY	319
(S) STRUCTURE	30
(T) SIGNING	22
(T) LIGHTING	
(X) CROSS SECTIONS	103

SHEETS NOT INCLUDED IN TOTAL SHEETS

R2a - R2at

STANDARD DRAWINGS

NUMBER	NUMBER	NUMBER	NUMBER
BGX-004-09	RBR-031	RDM-013-03	RPN-010-06
BGX-005-09	RDB-001-11	RDM-100-02	RPN-015-04
RBB-001-07	RDB-005-08	RDM-105-02	RPN-020-03
RBC-001-09	RDB-230-08	RDH-020-03	RPS-010-10
RBC-002-01	RDB-231-10	RDP-001-05	RPS-020-13
RBC-003-07	RDD-020-06	RDP-005-04	RPS-030-05
RBE-065-06	RDD-021-06	RDP-006-03	RPS-031-05
RBE-100-09	RDD-040-04	RDP-007-03	RPS-035-05
RBI-001-09	RDB-270-08	RDP-010-08	RPS-036-05
RBI-002-06	RDB-271-04	RDX-210-02	RPS-038-05
RBI-003-07	RDB-272-06	RDX-225	RPX-001-03
RBI-005-07	RDB-273-05	RDX-230	RPX-015-03
RBI-006-06	RDB-400-04	RGS-001-06	TPM-105-01
RBM-001-09	RDB-410-05	RGS-002-05	TPM-125-01
RBM-003-10	RDB-420-04	RGX-001-05	TPM-130-01
RBM-006-09	RDB-430-04	RGX-002-08	TPM-135-01
RBM-015-05	RDI-016-02	RGX-010-03	TTC-115-01
RBM-020-08	RDI-020-08	RGX-060	TTC-120-01
RBR-001-11	RDI-025-04	RGX-061	TTC-135-01
RBR-005-10	RDI-021	RPM-001-03	TTC-155-01
RBR-010-05	RDI-026	RPM-100-09	TTC-160-01
RBR-015-04	RDI-035-01	RPM-120-06	TTD-110-01
RBR-016-04	RDM-010-05	RPM-140-04	TTD-120
RBR-025-03	RDM-011-04	RPM-145-03	TTS-110-01
RBR-030-04	RDM-012-02	RPN-001-06	TTS-115-01

100 STANDARD DRAWINGS

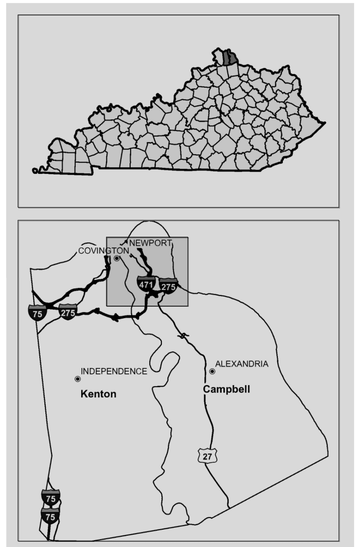

I-471 STA 314+45.00
END PROJECT

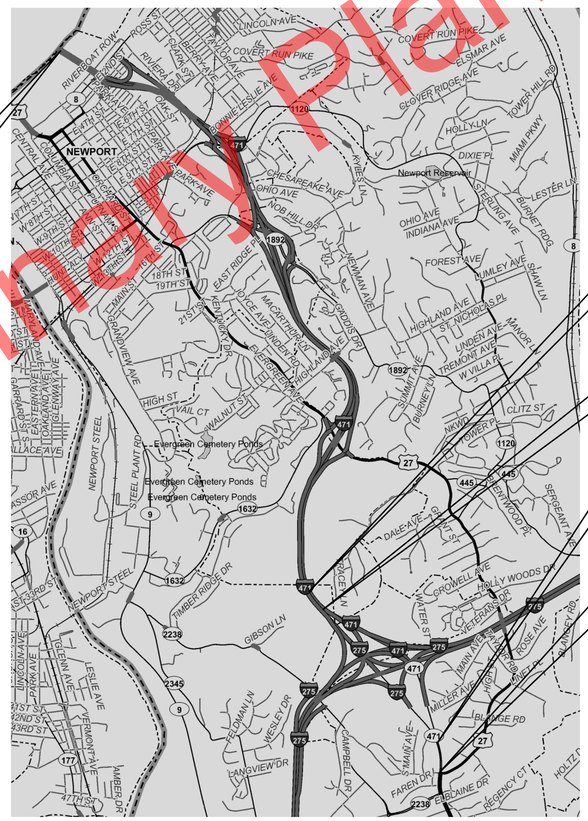

BRIDGE WORK LOCATIONS

Bridge Maint. No.	Station	Alignment
019B00044R	53+50 ①	I-471 SB
019B00049R	141+65	I-471 B
019B00049R	141+65	I-471 B
019B00050N	172+02 ②	I-471 B
019B00051N	26+17	CA RAMP E
019B00052R	218+63	I-471 B
019B00052L	218+63	I-471 B
019B00053R	233+15	I-471 B
019B00053L	233+15	I-471 B
019B00056R	272+14	I-471 B
019B00056L	272+14	I-471 B
019B00065N	16+89	KY 8 RAMP L
019B00082R	299+19	I-471 B
019B00082L	299+19	I-471 B
019B00039R	307+92	I-471 B
019B00039L	307+92	I-471 B
019B00046L	1209+60	I-275 WB

① Overpasses I-471 SB At This Station
② Overpasses I-471 At This Station

See The Proposal For Bridge Work Details

STA 105+37.00 BACK=
STA 103+00.37 AHEAD

SC 85+80.36 I-471 SB BACK, 32.00' LT.=
POC 89+35.92 I-471 NB BACK, 20.00' RT.=
POC 89+32.89 I-471 AHEAD

POC 21+89.35 I-471 BACK=
POT 21+89.35 I-471 SB AHEAD, 4.00' LT.=
CS 21+89.35 I-471 NB AHEAD, 4.00' RT.

I-471 STA 15+09.42
BEGIN PROJECT

SEE THE PROPOSAL FOR
Bridge Work Plans
Traffic Loops Plans

1 0.5 0 1 2

SCALE IN MILES

LAYOUT MAP

DESIGN CRITERIA

CLASS OF HIGHWAY	RURAL INTERSTATE
TYPE OF TERRAIN	ROLLING
DESIGN SPEED	65 MPH
REQUIRED NPSD	
REQUIRED PSD	
LEVEL OF SERVICE	
ADT PRESENT (2011)	100,000
ADT FUTURE (2031)	115,000
DHV	
D %	
T %	6.5

GEOGRAPHIC COORDINATES

LATITUDE 39 DEGREES 04 MINUTES 08 SECONDS NORTH
LONGITUDE 84 DEGREES 27 MINUTES 48 SECONDS WEST

DESIGNED

% RESTRICTED SD
LEVEL OF SERVICE
MAX. DISTANCE W/O PASSING

LENGTH 30.176 LIN. FT. 5.715 MILES
ADDED / DEDUCTED FOR EQUALITIES LIN. FT.
NOT INCLUDED
RAILROAD CROSSINGS NO. LIN. FT.
BRIDGES LIN. FT.

Commonwealth of Kentucky
DEPARTMENT OF HIGHWAYS
COUNTY OF
CAMPBELL

ITEM NO. 6-2021.00
PROJECT NUMBER: FD52 019 0471 000-005 IMNH 4714(034)
LETTING DATE:

RECOMMENDED BY: Dan Hite, PROJECT MANAGER DATE: 1/3/2012

PLAN APPROVED BY: STATE HIGHWAY ENGINEER DATE:

PREPARED AND SUBMITTED BY
WMB, INC. 1950 HAGGARD COURT LEXINGTON, KENTUCKY 40505

BY: James D. Napier
DATE: January 3, 2012
KY. REGISTRATION NO.: 10,393

STATE OF KENTUCKY · JAMES DAVID NAPIER · 10393 · LICENSED PROFESSIONAL ENGINEER

James D. Napier

FILE NAME: P:\CIVIL\14716-2021.00\CONTRACT PLANS AND PROPOSAL\CONTRACT PLAN SET\ROADWAY\R001OOLS.DGN
USER: tvonbehren
DATE PLOTTED: January 2, 2012
E-SHEET NAME:
MicroStation v8.11.7.443

COUNTY OF	ITEM NO.	SHEET NO.
CAMPBELL	6-2021.00	R2

I–471 TYPICAL SECTIONS – JPC ALTERNATE

SURFACING SCHEDULE

NEW CONSTRUCTION USING RIGID PAVEMENT

FULL DEPTH JPC PAVEMENT REPLACEMENT

I-471 BEGIN PROJECT TO STA 261+30.61
I-275 RAMPS A, B, C, D, E, F, G, AND H

DRIVING LANES

12" CEMENT STABILIZED ROADBED	58.7 LBS/SY CEMENT 2.0 LBS/SY ASPHALT CURING SEAL 5.0 LBS/SY SAND FOR BLOTTER
APPROXIMATELY 16" BASE	4 INCH CRUSHED STONE BASE OR JPC PAVEMENT DRAINAGE BLANKET ②
APPROXIMATELY 13" SURFACE	JPC PAVEMENT-13 INCH

SHOULDERS ④

12" CEMENT STABILIZED ROADBED	58.7 LBS/SY CEMENT 2.0 LBS/SY ASPHALT CURING SEAL 5.0 LBS/SY SAND FOR BLOTTER
APPROXIMATELY 16" BASE	4 INCH CRUSHED STONE BASE OR JPC PAVEMENT DRAINAGE BLANKET ②
APPROXIMATELY 13" SURFACE	JPC PAVEMENT-13 INCH SHLD
① ASPHALT SEAL COAT (2 APPLICATIONS)	2.40 LBS/SQ YD ASPHALT SEAL COAT 20 LBS/SQ YD ASPHALT SEAL AGGREGATE (Size No. 8 or 9M)

SHOULDERS (ALTERNATE) ③④

(OUTSIDE SHOULDERS ONLY)

12" CEMENT STABILIZED ROADBED	58.7 LBS/SY CEMENT 2.0 LBS/SY ASPHALT CURING SEAL 5.0 LBS/SY SAND FOR BLOTTER
APPROXIMATELY 15.75" BASE	4 INCH CRUSHED STONE BASE OR JPC PAVEMENT DRAINAGE BLANKET ② 4 INCH CL3 ASPHALT BASE 1.00D PG64-22 4 INCH CL3 ASPHALT BASE 1.00D PG64-22 3.75 INCH CL3 ASPHALT BASE 1.00D PG64-22
APPROXIMATELY 1.25" SURFACE	1.25 INCH CL3 ASPHALT SURFACE 0.38d PG64-22
① ASPHALT SEAL COAT (2 APPLICATIONS)	2.40 LBS/SQ YD ASPHALT SEAL COAT 20 LBS/SQ YD ASPHALT SEAL AGGREGATE (Size No. 8 or 9M)

NOTES

RUMBLE STRIPS WILL NOT BE FORMED IN THE OUTSIDE SHOULDERS UNTIL AFTER THEY ARE NO LONGER NEEDED FOR MAINTENANCE OF TRAFFIC. WHEN NO LONGER NEEDED FOR MAINTENANCE OF TRAFFIC, TYPE 3 RUMBLE STRIPS ARE TO BE INSTALLED AND WILL BE PAID FOR AS SHOWN ON STANDARD DRAWING NO. RPM-145-03. RUMBLE STRIPS WILL OTHERWISE BE CONSTRUCTED PER STD. DWG. NO. RPN-001-06.

THE LONGITUDINALLY SAWED JOINT ALONG THE INSIDE CONCRETE BARRIER WALLS ARE TO BE SEALED WITH HOT POURED ELASTIC SEALANT.

ALL LONGITUDINAL AND TRANSVERSE JOINTS ARE TO BE SEALED WITH HOT-POURED ELASTIC SEALANT EXCEPT WHEN THE JOINT IS NOT AT A LANE LINE. WHEN A LONGITUDINAL JOINT IS NOT AT A LANE LINE, IT IS TO BE SEALED WITH AN APPROVED SILICONE SEALER.

ALL JPC SHOULDERS ARE TO BE CONSTRUCTED WITH LOAD TRANSFER ASSEMBLIES.

EXTRA MATERIAL REMOVED AND REPLACED BEYOND THE LIMITS OF THE FULL DEPTH CONSTRUCTION, SUCH AS THE EXISTING DGA SHOULDERS, WILL BE INCIDENTAL TO THE JPC PAVEMENT BID ITEM.

THE CONTRACTOR MAY USE EITHER:

18 INCH NO. 5 DEFORMED TIE BARS AT 20 INCH CENTERS; OR
18 INCH NO. 8 DEFORMED TIE BARS AT 30 INCH CENTERS

FOR THE TIE BARS BETWEEN NEW AND EXISTING CONCRETE PAVEMENT. THE BARS SHOULD BE LOCATED AT THE MID-POINT OF THE EXISTING 11-INCH PCC SLAB. DRILL THE TIE BAR HOLES TO A DEPTH EQUAL TO ½ THE LENGTH OF THE BARS. DRILL HOLES NO MORE THAN ⅛ INCH LARGER THAN THE BAR DIAMETER. ANCHOR TIE BARS IN TO THE EXISTING PAVEMENT USING AN EPOXY RESIN.

① ASPHALT SEAL COAT REQUIRED FROM THE OUTSIDE EDGE OF THE PAVED SHOULDER TO A POINT TWO FEET DOWN THE DITCH OR FILL SLOPE OR TO THE EDGE OF THE DGA, WHICHEVER IS LESS

② SEE THE TYPICAL SECTIONS FOR LOCATIONS OF CRUSHED STONE BASE OR JPC PAVEMENT DRAINAGE BLANKET.

③ ALTERNATE SHOULDER PAVEMENT MAY BE USED ON THE OUTSIDE SHOULDERS DURING PHASE I CONSTRUCTION. SEE THE MAINTENANCE OF TRAFFIC PLANS AND TYPICAL SECTIONS FOR LOCATIONS OF OUTSIDE SHOULDERS TO BE REPLACED DURING PHASE I CONSTRUCTION.

④ OUTSIDE SHOULDERS TO BE REPLACED DURING PHASE I WILL BE BID PER SQUARE YARD AND IS TO INCLUDE ALL PAVEMENT AND BASE LAYERS NECCESSARY TO CONSTRUCT EITHER THE CONCRETE OR THE ASPHALT ALTERNATE. ANY EXCAVATION BEYOND THE LIMITS OF THE FULL DEPTH REPLACEMNT WILL BE INCIDENTAL TO THE SHOULDER BID ITEM.

FULL DEPTH JPC PAVEMENT REPLACEMENT

US 27 RAMPS A, B, C AND D
GRAND AVENUE RAMPS E, EE, F, H AND K
MEMORIAL PARKWAY RAMPS A, D, N AND M

DRIVING LANES

12" CEMENT STABILIZED ROADBED	58.7 LBS/SY CEMENT 2.0 LBS/SY ASPHALT CURING SEAL 5.0 LBS/SY SAND FOR BLOTTER
APPROXIMATELY 4" BASE	4 INCH CRUSHED STONE BASE
APPROXIMATELY 11" SURFACE	JPC PAVEMENT-11 INCH

SHOULDERS

12" CEMENT STABILIZED ROADBED	58.7 LBS/SY CEMENT 2.0 LBS/SY ASPHALT CURING SEAL 5.0 LBS/SY SAND FOR BLOTTER
APPROXIMATELY 4" BASE	4 INCH CRUSHED STONE BASE
APPROXIMATELY 11" SURFACE	JPC PAVEMENT-11 INCH SHLD
① ASPHALT SEAL COAT (2 APPLICATIONS)	2.40 LBS/SQ YD ASPHALT SEAL COAT 20 LBS/SQ YD ASPHALT SEAL AGGREGATE (Size No. 8 or 9M)

Preliminary Plans

TYPICAL SECTIONS

FILE NAME: P:\CIVIL\147\16-2021.00\CONTRACT PLANS AND PROPOSAL\CONTRACT PLAN SET\ROADWAY\R0220OTS.DGN
USER: tvonbehren
DATE PLOTTED: January 2, 2012
E-SHEET NAME:
MicroStation v8.11.7.443

COUNTY OF	ITEM NO.	SHEET NO.
CAMPBELL	6-2021.00	R2a

I-471 TYPICAL SECTIONS – JPC ALTERNATE

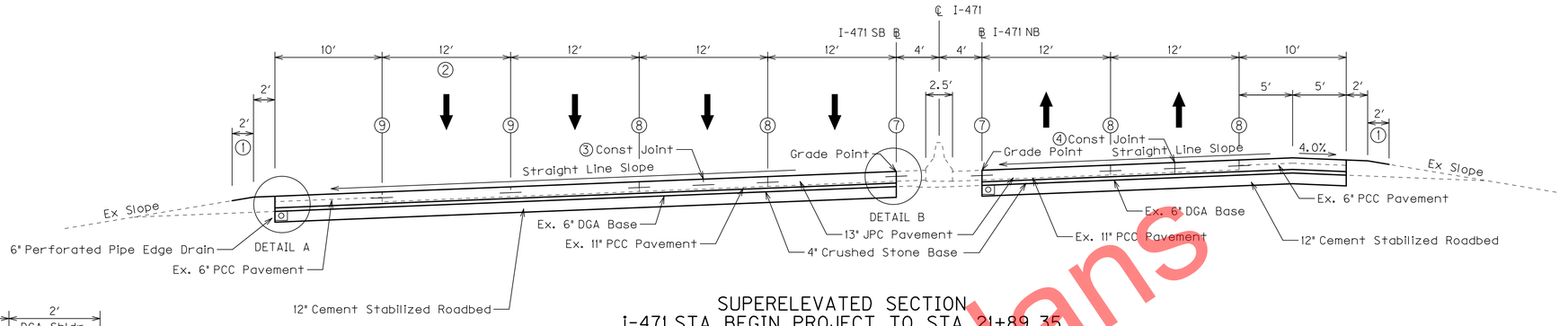

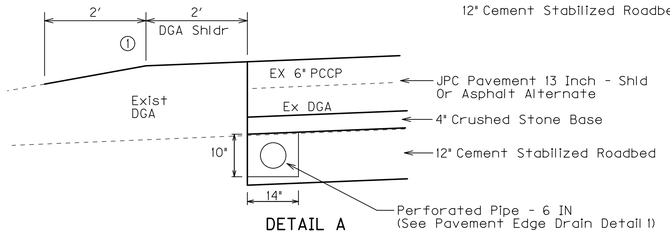

DETAIL A

SUPERELEVATED SECTION
I-471 STA BEGIN PROJECT TO STA 21+89.35
I-471 SB STA 21+88.35 TO STA 24+88.37
I-471 NB STA 21+89.35 TO STA 27+45.98

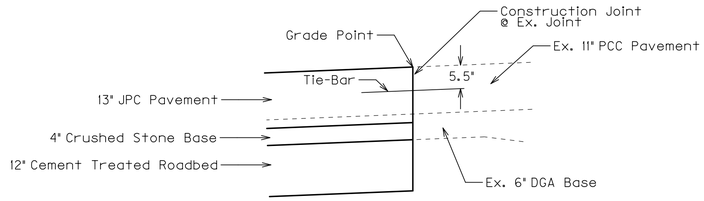

DETAIL B

ALTERNATE OUTSIDE SHOULDER PAVEMENT TYPICAL

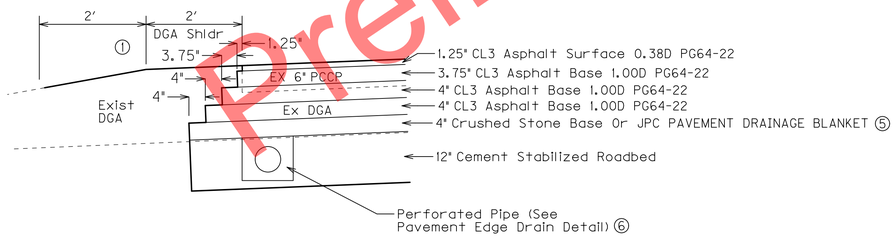

① ASPHALT SEAL COAT REQUIRED FROM THE OUTSIDE EDGE OF THE PAVED SHOULDER TO A POINT TWO FEET DOWN THE DITCH OR FILL SLOPE OR TO THE EDGE OF THE DGA, WHICHEVER IS LESS. 2 APPLICATIONS, SEE SHEET R2

② TAPERS FROM 12′ AT STA 16+49.5 TO 0′ AT STA 19+09.5

③ THIS CONSTRUCTION JOINT IS TO BE LOCATED AT THE CENTER OF THE MIDDLE LANE UNLESS OTHERWISE APPROVED BY THE ENGINEER. THE USE OF A HOOK BOLT WITH EXPANSION ANCHORS FOR TYING THE LONGITUDINAL JOINT WILL NOT BE PERMITTED. OPTIONAL TYPE JOINT

④ THIS CONSTRUCTION JOINT IS TO BE LOCATED AT THE CENTER OF THE OUTSIDE LANE UNLESS OTHERWISE APPROVED BY THE ENGINEER. THE USE OF A HOOK BOLT WITH EXPANSION ANCHORS FOR TYING THE LONGITUDINAL JOINT WILL NOT BE PERMITTED. LONGITUDINAL SAWED CONSTRUCTION JOINT

⑤ USE 4" JPC PAVEMENT DRAINAGE BLANKET FROM STA 99+49.90 TO STA 139+87.9 (I-471 BRIDGE OVER US 27)

⑥ SEE THE TYPICAL SECTIONS FOR LOCATIONS TO USE EITHER PAVEMENT EDGE DRAIN DETAIL 1 OR DETAIL 2.

⑦ LONGITUDINAL SAWED CONSTRUCTION JOINT

⑧ LONGITUDINAL SAWED JOINT

⑨ OPTIONAL TYPE JOINT

NOTE
SEE SHEET R2 FOR SURFACING SCHEDULE

TYPICAL SECTIONS

Preliminary Plans

MicroStation v8.11.7.443
E-SHEET NAME:
USER: tvonbehren
DATE PLOTTED: January 2, 2012
FILE NAME: P:\CIVIL\147\6-2021.00\CONTRACT PLANS AND PROPOSAL\CONTRACT PLAN SET\ROADWAY\R0020ATS.DGN

COUNTY OF	ITEM NO.	SHEET NO.
CAMPBELL	6-2021.00	R2b

I–471 TYPICAL SECTIONS – JPC ALTERNATE

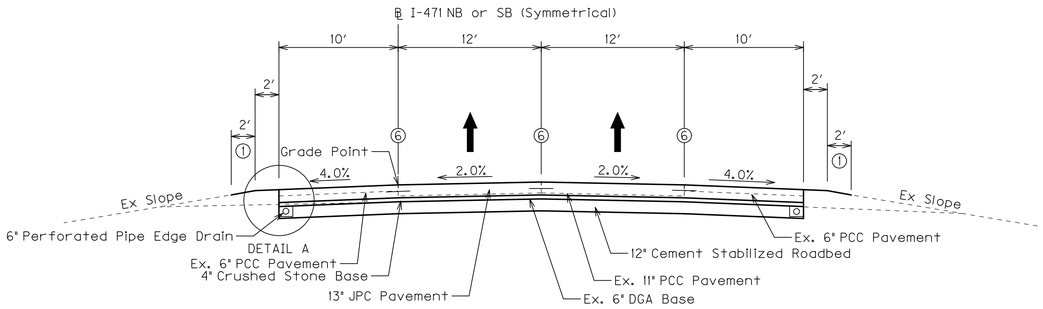

2 LANE NORMAL SECTION
I-471 NB OR SB

③ EXISTING SHOULDER IS 8′ (6′ PAVED) ON I-471 SB FROM STA 24+88 TO I-275 RAMP D. SHOULDER IS TO BE WIDENED TO 10.75′ (8.75′ PAVED).

④ LONGITUDINAL SAWED CONSTRUCTION JOINT

⑤ LONGITUDINAL SAWED JOINT

⑥ OPTIONAL TYPE JOINT

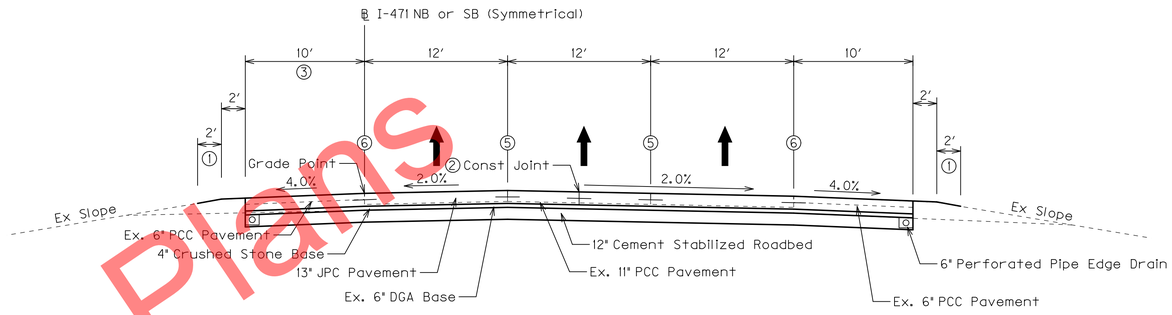

3 LANE NORMAL SECTION
I-471 NB OR SB

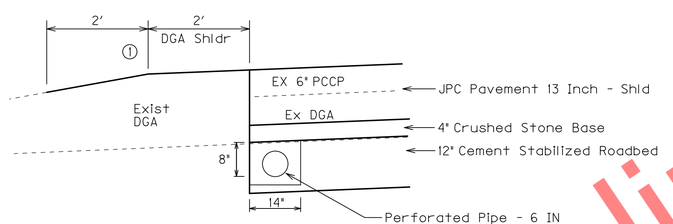

DETAIL A

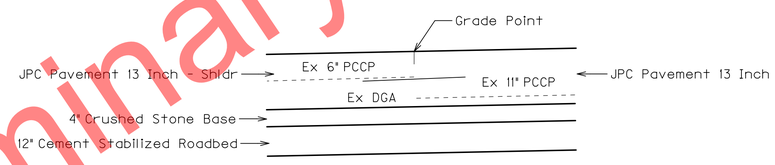

DETAIL B

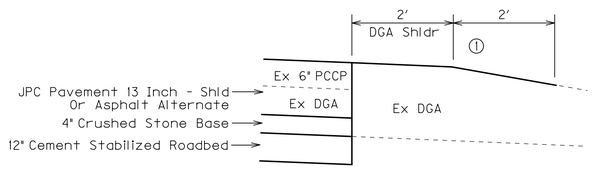

DETAIL C

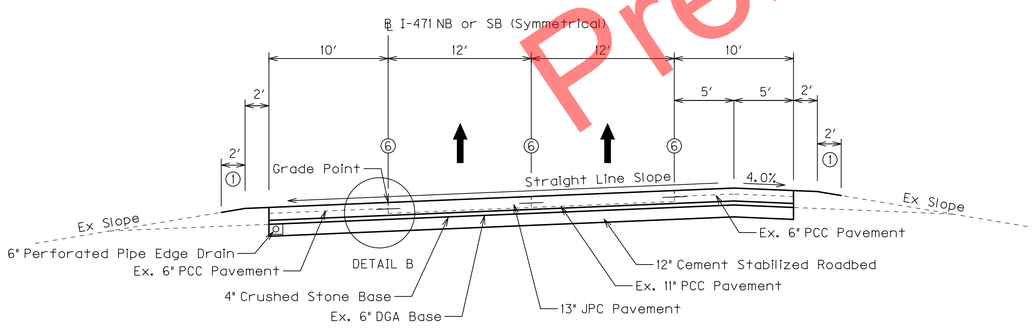

2 LANE SUPERELEVATED SECTION
I-471 NB OR SB

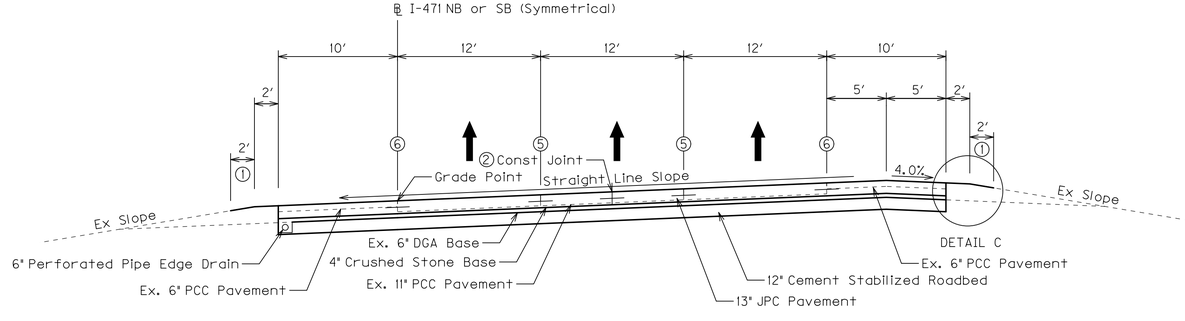

3 LANE SUPERELEVATED SECTION
I-471 NB OR SB

① ASPHALT SEAL COAT REQUIRED FROM THE OUTSIDE EDGE OF THE PAVED SHOULDER TO A POINT TWO FEET DOWN THE DITCH OR FILL SLOPE OR TO THE LIMITS OF THE DGA, WHICHEVER IS LESS. 2 APPLICATIONS, SEE SHEET R2

② THIS CONSTRUCTION JOINT IS TO BE LOCATED AT THE CENTER OF THE MIDDLE LANE UNLESS OTHERWISE APPROVED BY THE ENGINEER. THE USE OF A HOOK BOLT WITH EXPANSION ANCHORS FOR TYING THE LONGITUDINAL JOINT WILL NOT BE PERMITTED. LONGITUDINAL SAWED CONSTRUCTION JOINT

NOTE

SEE SHEET R2 FOR SURFACING SCHEDULE

TYPICAL SECTIONS

Preliminary Plans

MicroStation v8.11.7.443
E-SHEET NAME:
USER: tvonbehren
DATE PLOTTED: January 2, 2012
FILE NAME: P:\CIVIL\471\6-2021.00\CONTRACT PLANS AND PROPOSAL\CONTRACT PLAN SET\ROADWAY\R0020BTS.DGN

COUNTY OF	ITEM NO.	SHEET NO.
CAMPBELL	6-2021.00	R2c

I–471 TYPICAL SECTIONS – JPC ALTERNATE

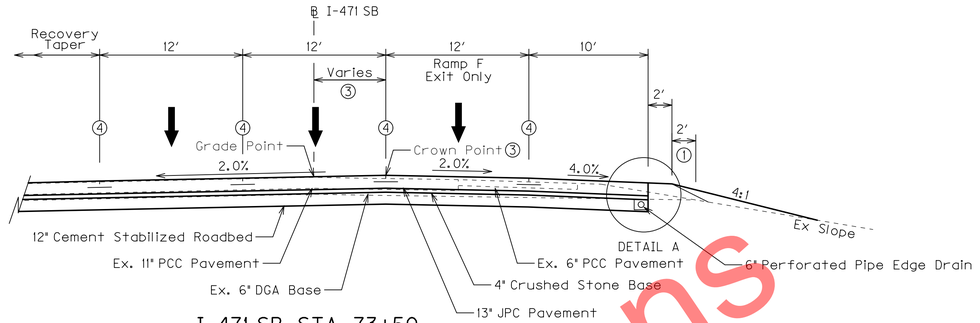

I-471 SB STA 73+50

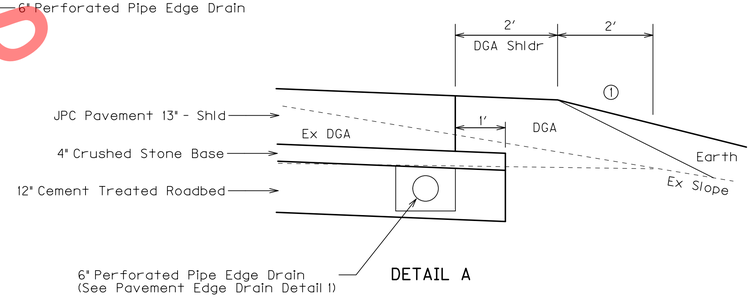

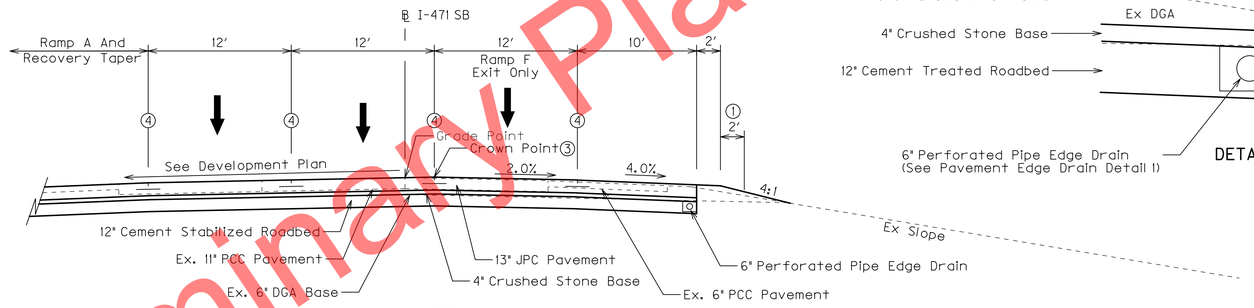

I-471 SB
STA 70+99.86 TO STA 81+00

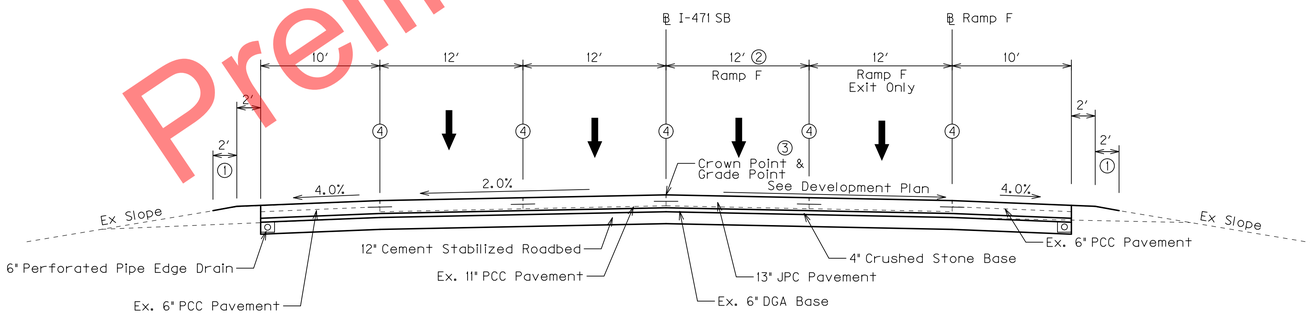

I-471 SB STA 66+57.58 TO STA 70+99.86

① ASPHALT SEAL COAT REQUIRED FROM THE OUTSIDE EDGE OF THE PAVED SHOULDER TO A POINT TWO FEET DOWN THE DITCH OR FILL SLOPE OR TO THE LIMITS OF THE DGA, WHICHEVER IS LESS. 2 APPLICATIONS, SEE SHEET R2

② TAPERS FROM 12′ TO 0′ FROM STA 66+57.58 TO STA 70+99.86 SEE DEVELOPMENT PLAN

③ CROWN LOCATION TAPERS FROM 0′ RT TO 12′ RT OF ℄ I-471 SB FROM STA 69+27.95 TO STA 77+67.95 SEE DEVELOPMENT PLAN

④ OPTIONAL TYPE JOINT

NOTE

SEE SHEET R2 FOR SURFACING SCHEDULE

TYPICAL SECTIONS

Preliminary Plans

FILE NAME: P:\CIVIL\147\N6-2021.00\CONTRACT PLANS AND PROPOSAL\CONTRACT PLAN SET\ROADWAY\R0220CTS.DGN
USER: tvanbehren
DATE PLOTTED: January 2, 2012
E-SHEET NAME:
MicroStation v8.11.7.443

COUNTY OF	ITEM NO.	SHEET NO.
CAMPBELL	6-2021.00	R2d

I-471 TYPICAL SECTIONS – JPC ALTERNATE

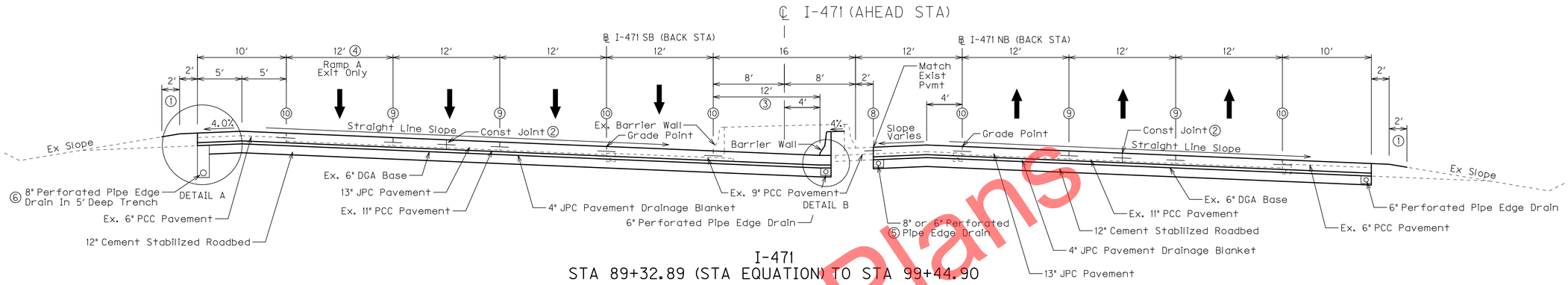

I-471
STA 89+32.89 (STA EQUATION) TO STA 99+44.90

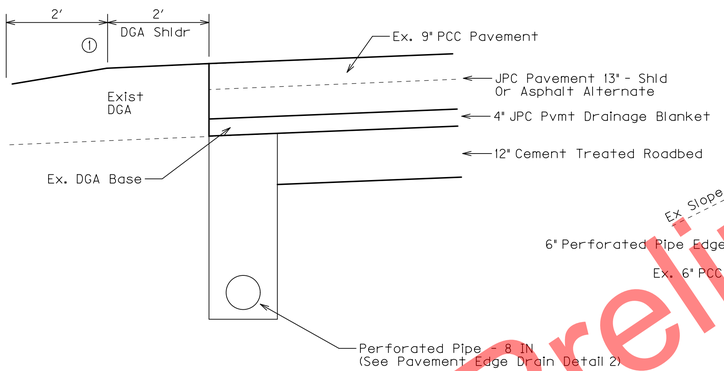

DETAIL A

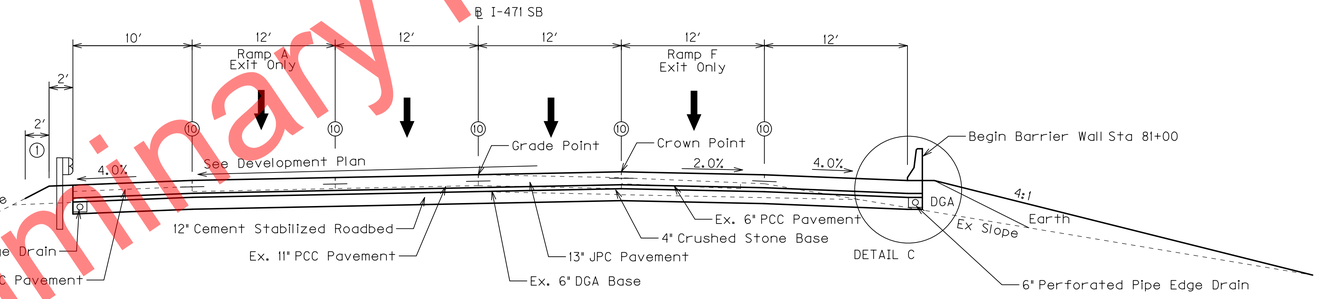

I-471 SB
STA 81+00 TO STA 85+80.36 (STA EQUATION)

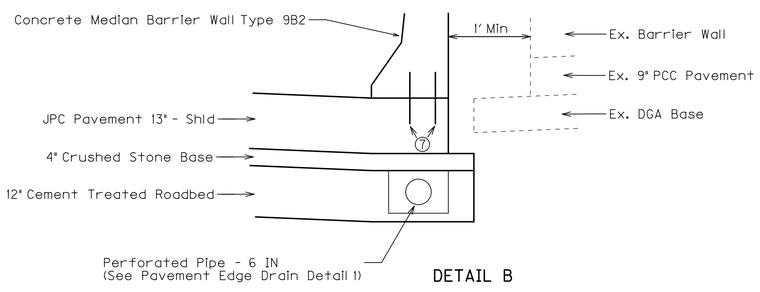

DETAIL B

① ASPHALT SEAL COAT REQUIRED FROM THE OUTSIDE EDGE OF THE PAVED SHOULDER TO A POINT TWO FEET DOWN THE DITCH OR FILL SLOPE OR TO THE LIMITS OF THE DGA, WHICHEVER IS LESS. 2 APPLICATIONS. SEE SHEET R2

② THIS CONSTRUCTION JOINT IS TO BE LOCATED AT THE CENTER OF THE MIDDLE LANE UNLESS OTHERWISE APPROVED BY THE ENGINEER. THE USE OF A HOOK BOLT WITH EXPANSION ANCHORS FOR TYING THE LONGITUDINAL JOINT WILL NOT BE PERMITTED. LONGITUDINAL SAWED CONSTRUCTION JOINT

③ TAPERS TO 0′ TO MATCH EXISTING BARRIER WALL FROM STA 90+69.90 TO STA 99+44.9 SEE PLAN

④ TAPER FROM 12′ TO 0′ FROM STA 91+00 TO STA 94+00 I-471

⑤ SEE PERFORATED PIPE SUMMARY FOR SIZES AND STATIONS

⑥ SEE PERFORATED PIPE SUMMARY FOR STATIONS. SEE PAVEMENT EDGE DRAIN DETAIL 2 WHERE 5′ DEEP TRENCH IS SHOWN. SEE PAVEMENT EDGE DRAIN DETAIL 1 FOR ALL OTHER LOCATIONS.

⑦ NO. 8 DOWEL BARS SPACED 4′ O.C. AND STAGGERED 2′. SEE STD DWG RBM-001-09

⑧ LONGITUDINAL SAWED CONSTRUCTION JOINT

⑨ LONGITUDINAL SAWED JOINT

⑩ OPTIONAL TYPE JOINT

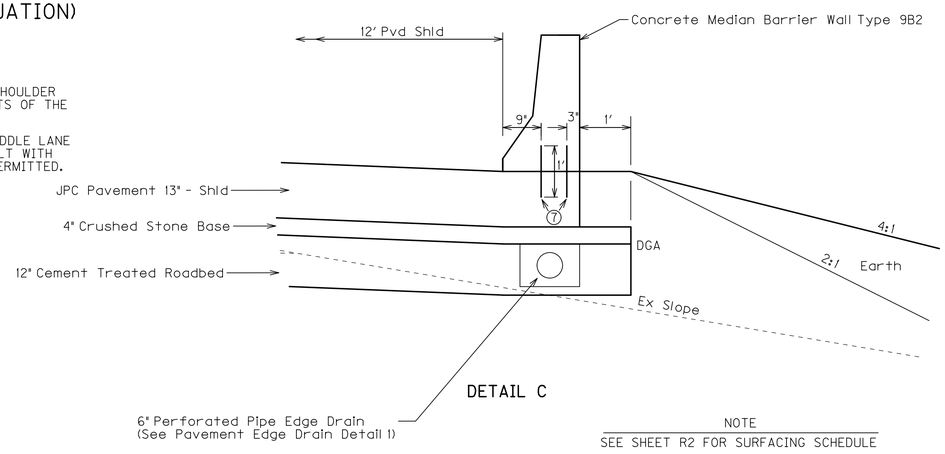

DETAIL C

NOTE
SEE SHEET R2 FOR SURFACING SCHEDULE

TYPICAL SECTIONS

Preliminary Plans

MicroStation v8.11.7.443
E-SHEET NAME:
USER: tvonbehren
DATE PLOTTED: January 2, 2012
FILE NAME: P:\CIVIL\471\6-2021.00\CONTRACT PLANS AND PROPOSAL\CONTRACT PLAN SET\ROADWAY\R02DDTS.DGN

COUNTY OF	ITEM NO.	SHEET NO.
CAMPBELL	6-2021.00	R2e

I-471 TYPICAL SECTIONS - JPC ALTERNATE

I-471
STA 99+44.90 TO STA 160+50 &
STA 189+67.20 TO STA 244+79.59
(EXISTING 3 LANE SECTION)

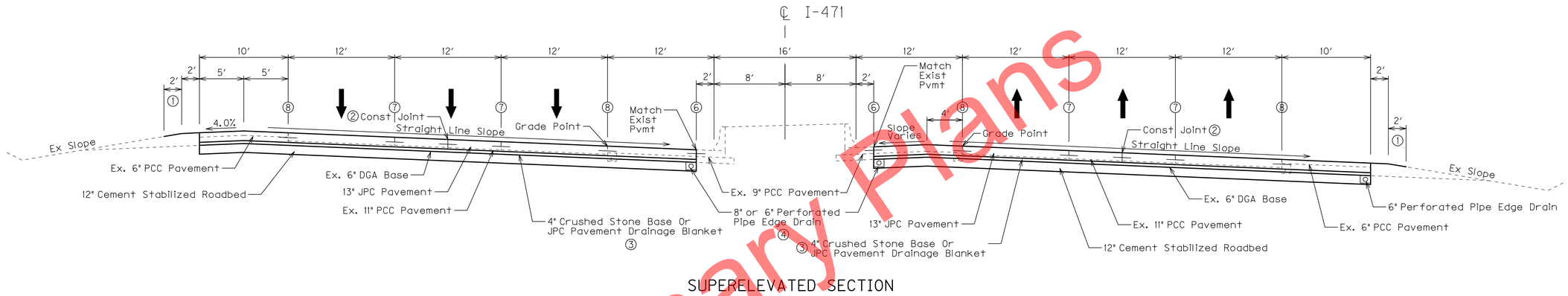

SUPERELEVATED SECTION

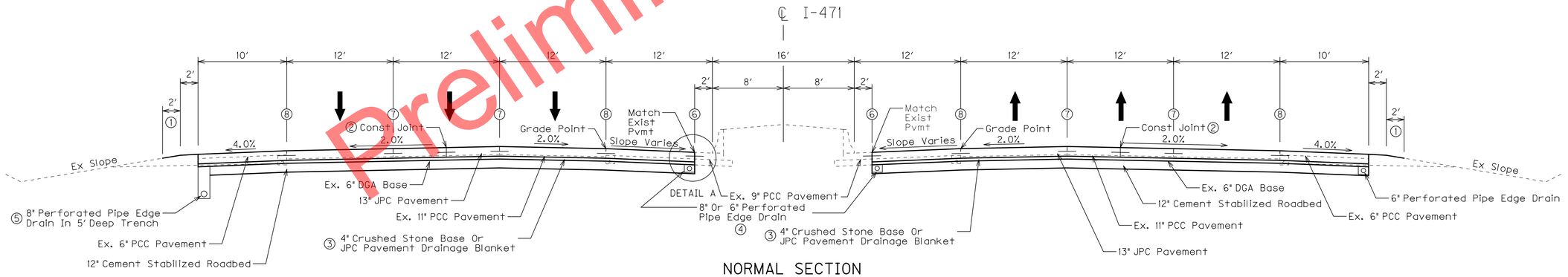

NORMAL SECTION

① ASPHALT SEAL COAT REQUIRED FROM THE OUTSIDE EDGE OF THE PAVED SHOULDER TO A POINT TWO FEET DOWN THE DITCH OR FILL SLOPE OR TO THE LIMITS OF THE DGA, WHICHEVER IS LESS. 2 APPLICATIONS, SEE SHEET R2

② THIS CONSTRUCTION JOINT IS TO BE LOCATED AT THE CENTER OF THE MIDDLE LANE UNLESS OTHERWISE APPROVED BY THE ENGINEER. THE USE OF A HOOK BOLT WITH EXPANSION ANCHORS FOR TYING THE LONGITUDINAL JOINT WILL NOT BE PERMITTED. LONGITUDINAL SAWED CONSTRUCTION JOINT

③ USE 4" JPC PAVEMENT DRAINAGE BLANKET FROM STA 99+49.90 TO STA 139+87.9 (I-471 BRIDGE OVER US 27)

④ SEE PERFORATED PIPE SUMMARY FOR SIZES AND STATIONS

⑤ SEE PERFORATED PIPE SUMMARY FOR STATIONS. SEE PAVEMENT EDGE DRAIN DETAIL 2 WHERE 5′ DEEP TRENCH IS SHOWN. SEE PAVEMENT EDGE DRAIN DETAIL 1 FOR ALL OTHER LOCATIONS.

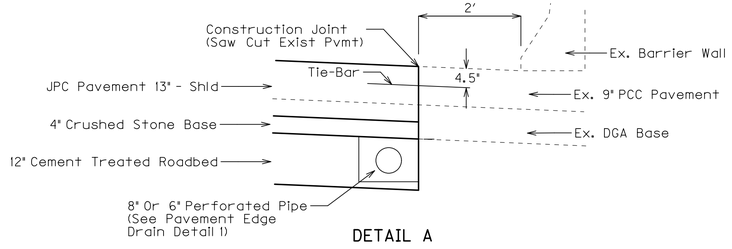

DETAIL A

⑥ LONGITUDINAL SAWED CONSTRUCTION JOINT

⑦ LONGITUDINAL SAWED JOINT

⑧ OPTIONAL TYPE JOINT

NOTE
SEE SHEET R2 FOR SURFACING SCHEDULE

TYPICAL SECTIONS

Preliminary Plans

FILE NAME: P:\CIVIL\147\N6-2021.00\CONTRACT PLANS AND PROPOSAL\CONTRACT PLAN SET\ROADWAY\R0020ETS.DGN
USER: tvonbehren
DATE PLOTTED: January 2, 2012
E-SHEET NAME:
MicroStation v8.11.7.443

COUNTY OF	ITEM NO.	SHEET NO.
CAMPBELL	6-2021.00	R2f

I-471 TYPICAL SECTIONS – JPC ALTERNATE

I-471
STA 160+50 TO STA 189+67.20
(EXISTING 4 LANE SECTION)

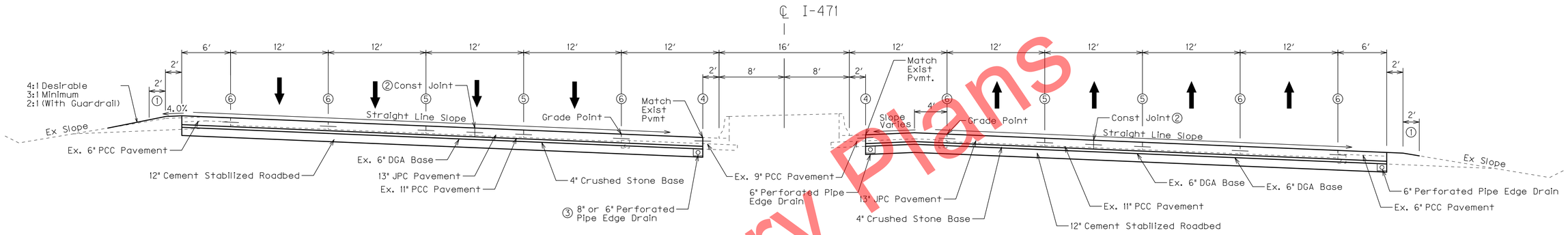

SUPERELEVATED SECTION

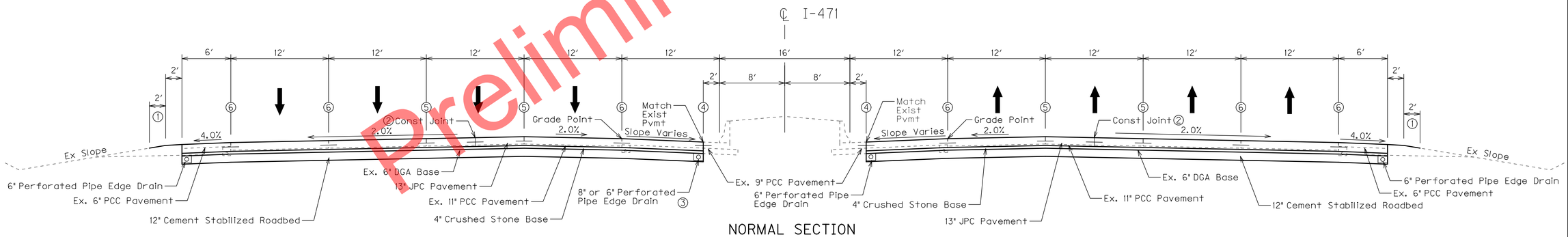

NORMAL SECTION

① ASPHALT SEAL COAT REQUIRED FROM THE OUTSIDE EDGE OF THE PAVED SHOULDER TO A POINT TWO FEET DOWN THE DITCH OR FILL SLOPE OR TO THE LIMITS OF THE DGA, WHICHEVER IS LESS. 2 APPLICATIONS, SEE SHEET R2

② THIS CONSTRUCTION JOINT IS TO BE LOCATED AT THE CENTER OF THE LANE UNLESS OTHERWISE APPROVED BY THE ENGINEER. THE USE OF A HOOK BOLT WITH EXPANSION ANCHORS FOR TYING THE LONGITUDINAL JOINT WILL NOT BE PERMITTED. LONGITUDINAL SAWED CONSTRUCTION JOINT

③ SEE PERFORATED PIPE SUMMARY FOR SIZES AND STATIONS

④ LONGITUDINAL SAWED CONSTRUCTION JOINT

⑤ LONGITUDINAL SAWED JOINT

⑥ OPTIONAL TYPE JOINT

NOTE
SEE SHEET R2 FOR SURFACING SCHEDULE

TYPICAL SECTIONS

Preliminary Plans

MicroStation v8.11.7.443
E-SHEET NAME:
USER: tvonbehren
DATE PLOTTED: January 2, 2012
FILE NAME: P:\CIVIL\147N\6-2021.00\CONTRACT PLANS AND PROPOSAL\CONTRACT PLAN SET\ROADWAY\R0020FTS.DGN

COUNTY OF	ITEM NO.	SHEET NO.
CAMPBELL	6-2021.00	R2g

I–471 TYPICAL SECTIONS – JPC ALTERNATE

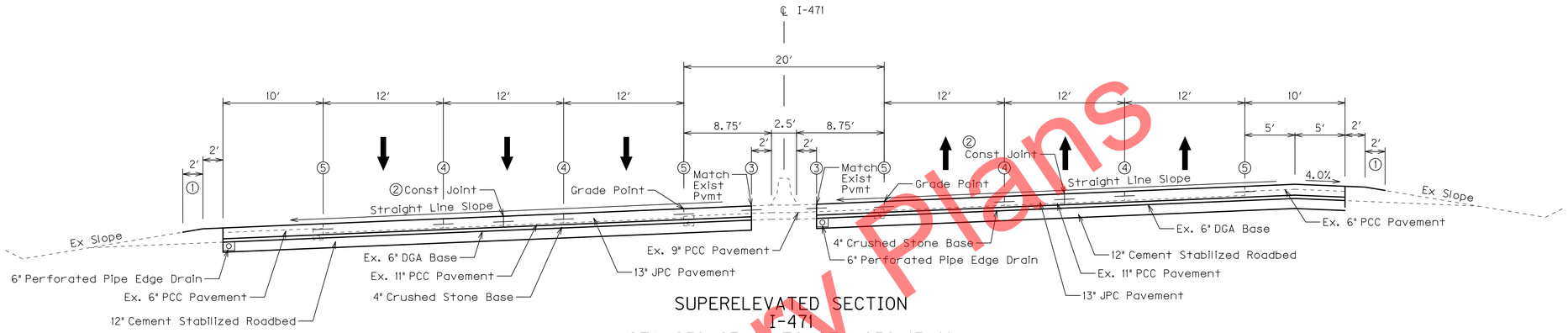

SUPERELEVATED SECTION
I-471
STA 252+63.48 TO STA 256+13.48

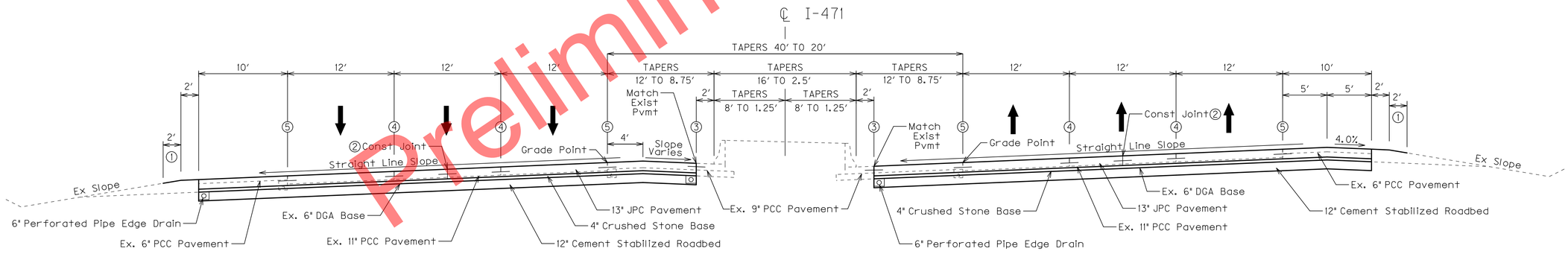

SUPERELEVATED SECTION
I-471
STA 244+79.59 TO STA 252+63.48

Preliminary Plans

① ASPHALT SEAL COAT REQUIRED FROM THE OUTSIDE EDGE OF THE PAVED SHOULDER TO A POINT TWO FEET DOWN THE DITCH OR FILL SLOPE OR TO THE LIMITS OF THE DGA, WHICHEVER IS LESS. 2 APPLICATIONS, SEE SHEET R2

② THIS CONSTRUCTION JOINT IS TO BE LOCATED AT THE CENTER OF THE MIDDLE LANE UNLESS OTHERWISE APPROVED BY THE ENGINEER. THE USE OF A HOOK BOLT WITH EXPANSION ANCHORS FOR TYING THE LONGITUDINAL JOINT WILL NOT BE PERMITTED. LONGITUDINAL SAWED CONSTRUCTION JOINT

③ LONGITUDINAL SAWED CONSTRUCTION JOINT

④ LONGITUDINAL SAWED JOINT

⑤ OPTIONAL TYPE JOINT

NOTE
SEE SHEET R2 FOR SURFACING SCHEDULE

TYPICAL SECTIONS

FILE NAME: P:\CIVIL\147\N6-2021.00\CONTRACT PLANS AND PROPOSAL\CONTRACT PLAN SET\ROADWAY\R0020GTS.DGN
USER: tvonbehren
DATE PLOTTED: January 2, 2012
E-SHEET NAME:
MicroStation v8.11.7.443

COUNTY OF	ITEM NO.	SHEET NO.
CAMPBELL	6-2021.00	R2h

I–471 TYPICAL SECTIONS – JPC ALTERNATE

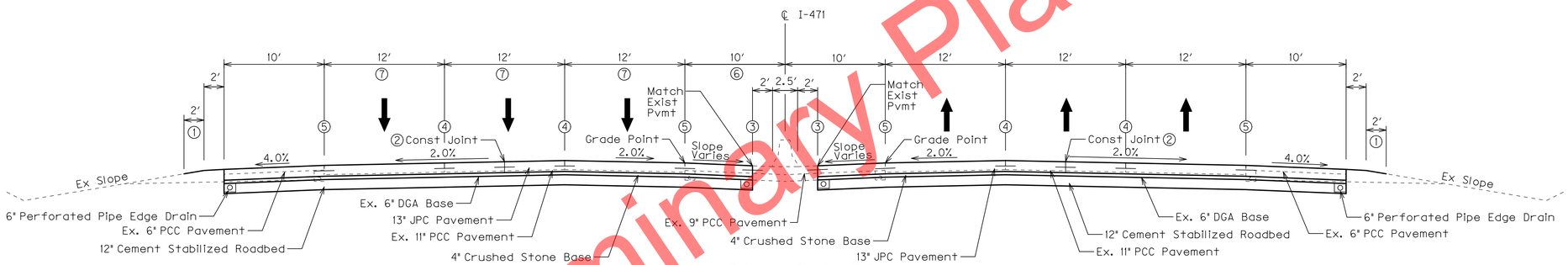

NORMAL SECTION
I-471
STA 256+13.48 TO STA 261+30.61 (BEGIN BRIDGE)

Preliminary Plans

① ASPHALT SEAL COAT REQUIRED FROM THE OUTSIDE EDGE OF THE PAVED SHOULDER TO A POINT TWO FEET DOWN THE DITCH OR FILL SLOPE OR TO THE LIMITS OF THE DGA, WHICHEVER IS LESS. 2 APPLICATIONS, SEE SHEET R2

② THIS CONSTRUCTION JOINT IS TO BE LOCATED AT THE CENTER OF THE EXISTING MIDDLE LANE UNLESS OTHERWISE APPROVED BY THE ENGINEER. THE USE OF A HOOK BOLT WITH EXPANSION ANCHORS FOR TYING THE LONGITUDINAL JOINT WILL NOT BE PERMITTED. LONGITUDINAL SAWED CONSTRUCTION JOINT

③ LONGITUDINAL SAWED CONSTRUCTION JOINT

④ LONGITUDINAL SAWED JOINT

⑤ OPTIONAL TYPE JOINT

⑥ STA 260+37 BEGIN 360′ TAPER TO 5′ @ STA 263+97 (ON BRIDGE)

⑦ STA 260+37 BEGIN 360′ TAPER TO 11.5′ @ STA 263+97 (ON BRIDGE)

NOTE
SEE SHEET R2 FOR SURFACING SCHEDULE

TYPICAL SECTIONS

MicroStation v8.11.7.443
E-SHEET NAME:
USER: tvonbehren
DATE PLOTTED: January 2, 2012
FILE NAME: P:\CIVIL\147\N6-2021.00\CONTRACT PLANS AND PROPOSAL\CONTRACT PLAN SET\ROADWAY\R002DHTS.DGN

COUNTY OF	ITEM NO.	SHEET NO.
CAMPBELL	6-2021.00	R21

I–275 RAMP A TYPICAL SECTION – JPC ALTERNATE

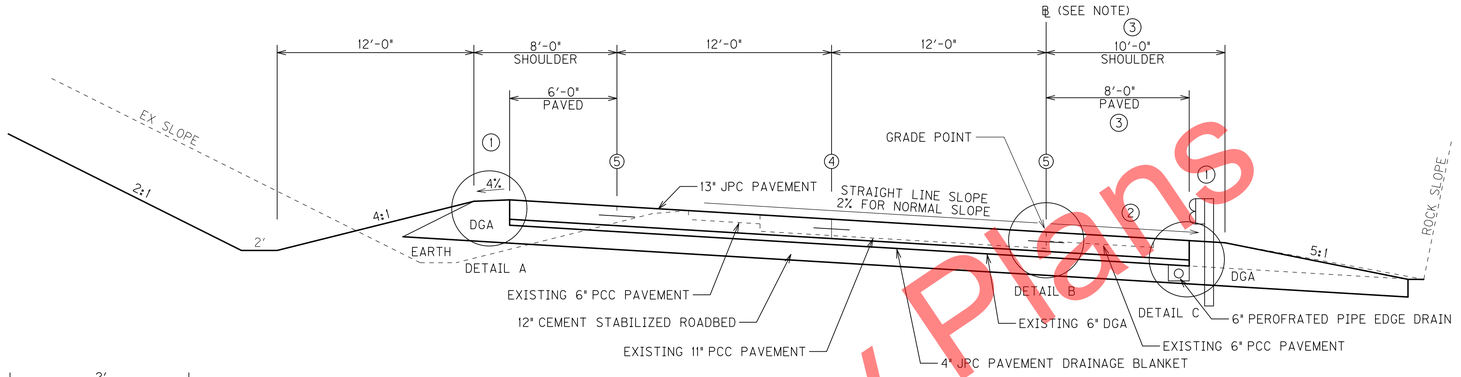

I-275 RAMP A

SEE CROSS SECTIONS FOR SLOPES OUTSIDE SHOULDERS LIMITS

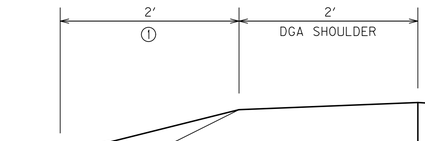

DETAIL A

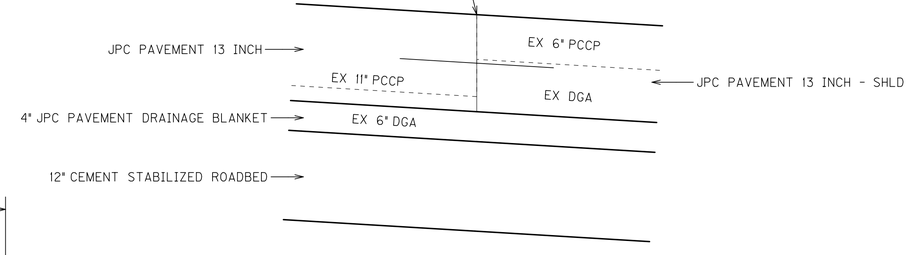

DETAIL B

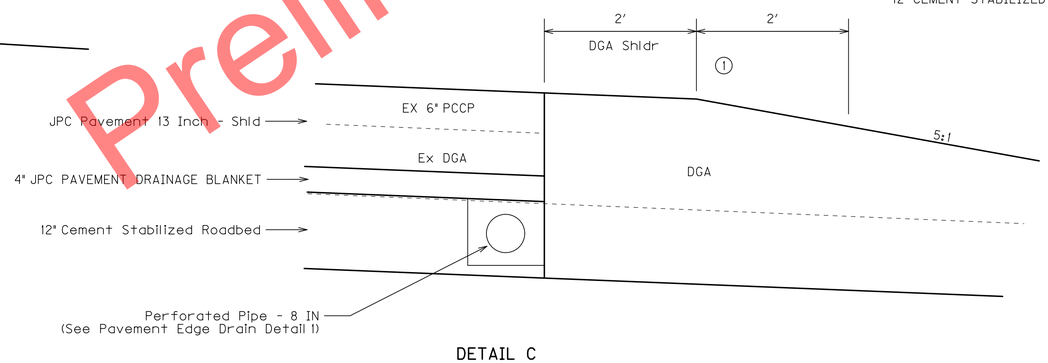

DETAIL C

① ASPHALT SEAL COAT REQUIRED FROM THE OUTSIDE EDGE OF THE PAVED SHOULDER TO A POINT TWO FEET DOWN THE DITCH OR FILL SLOPE OR TO THE OUTER EDGE OF THE DGA, WHICHEVER IS LESS. 2 APPLICATIONS, SEE SHEET R2

② SHOULDER CONSTRUCTED TO NORMAL SUPERELEVATION EXCEPT NOT FLATTER THAN STANDARD SHOULDER FOR NORMAL SLOPES.

③ 8' (6' PAVED) STA 0+00 TO STA 8+63, 10' (8' PAVED) STA 8+63 TO STA 22+30

④ LONGITUDINAL SAWED CONSTRUCTION JOINT

⑤ OPTIONAL TYPE JOINT

NOTES:

THE RAMP A BASELINE DIVERGES FROM THE EXITING EDGE OF PAVEMENT BEGINNING APPROXIMATELY STA 15+50 TO APPROXIMATELY THREE FEET RIGHT OF THE EXISTING BASELINE AT STA 21+81.68.

SEE SHEET R2 FOR SURFACING SCHEDULE

TYPICAL SECTIONS

Preliminary Plans

MicroStation v8.11.7.443
E-SHEET NAME:
USER: tvonbehren
DATE PLOTTED: January 2, 2012
FILE NAME: P:\CIVIL\147\N6-2021.00\CONTRACT PLANS AND PROPOSAL\CONTRACT PLAN SET\ROADWAY\R0220ITS.DGN

COUNTY OF	ITEM NO.	SHEET NO.
CAMPBELL	6-2021.00	R2j

I–471 RAMP TYPICAL SECTIONS – JPC ALTERNATE

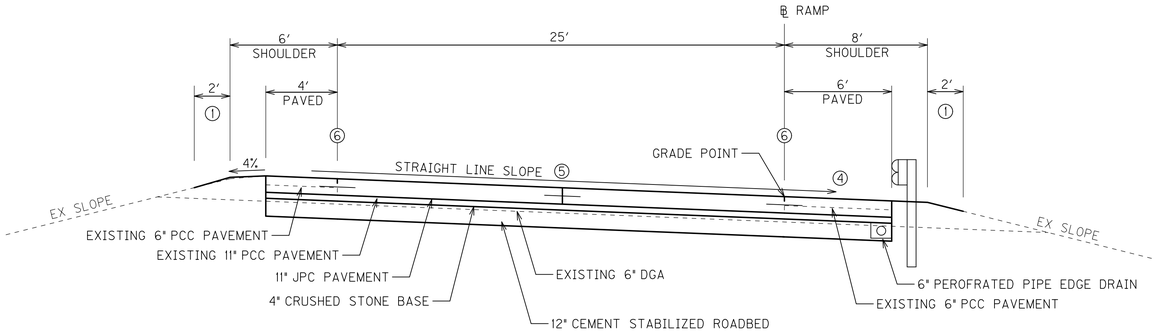

GRAND AVE RAMP F

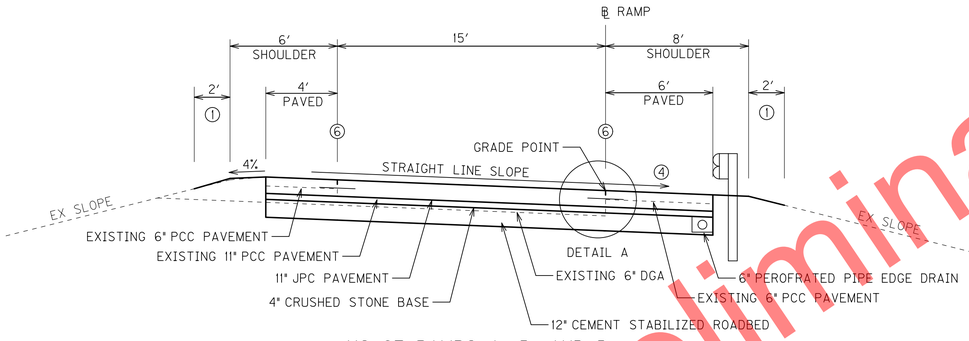

US 27 RAMPS A, B, AND D
GRAND AVE RAMPS EE AND H
MEMORIAL PKWY RAMPS A, D, N AND M

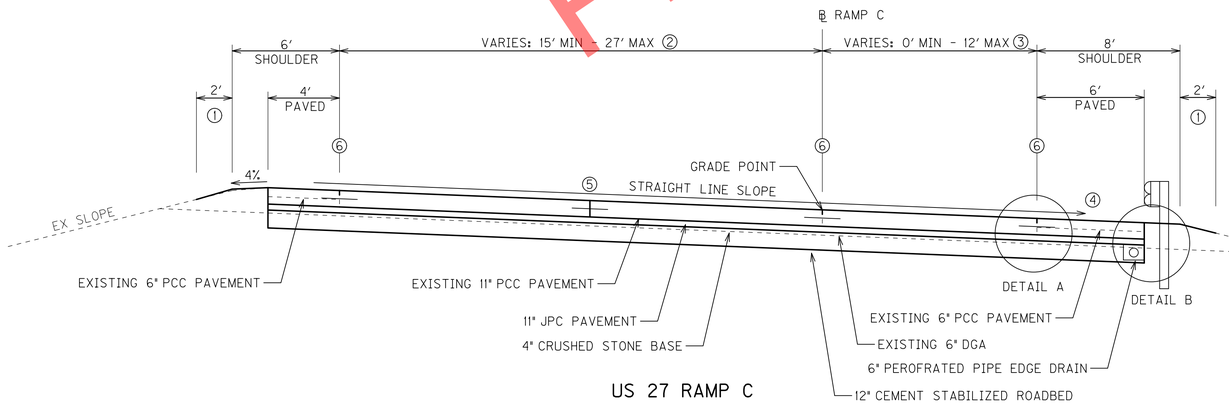

US 27 RAMP C

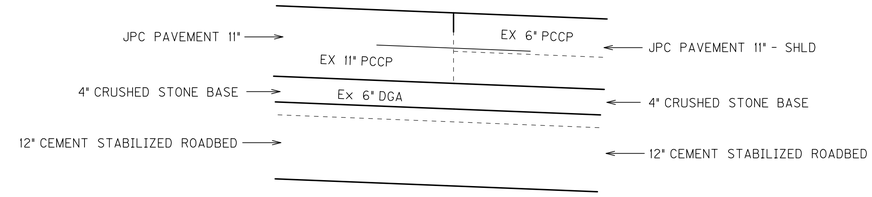

DETAIL A

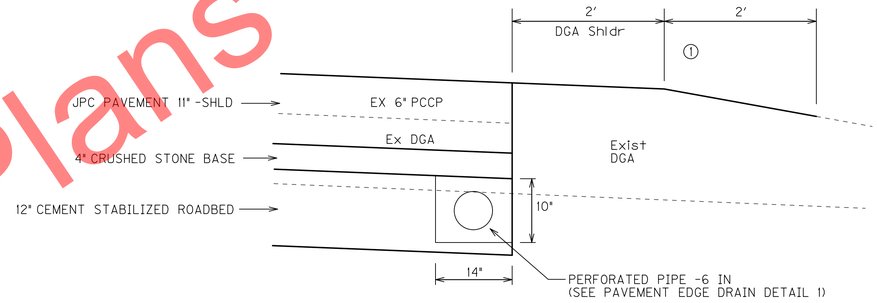

DETAIL B

RECONSTRUCT ISLAND DETAIL

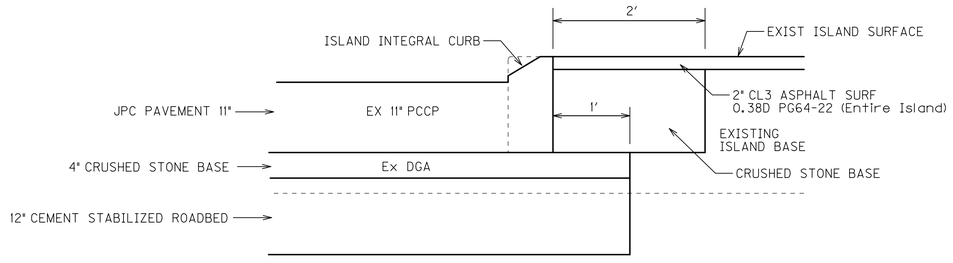

NOTE: SAW CUTTING OF THE EXISTING ISLAND SURFACE AND REMOVAL OF EXISTING CURB, ISLAND SURFACE, AND ALL MATERIAL REQUIRED TO CONSTRUCT THE NEW CURB AND PAVEMENT WILL BE INCIDENTAL TO THE NEW ISLAND CURB BID ITEM.

① ASPHALT SEAL COAT REQUIRED FROM THE OUTSIDE EDGE OF THE PAVED SHOULDER TO A POINT TWO FEET DOWN THE DITCH OR FILL SLOPE OR TO THE OUTER EDGE OF THE DGA, WHICHEVER IS LESS. 2 APPLICATIONS, SEE SHEET R2

② TAPERS FROM 15′ TO 18′ FROM STA 11+50 TO STA 13+00. TAPERS FROM 18′ TO 27′ FROM STA 13+00 TO STA 16+00

③ TAPERS FROM 0′ TO 12′ FROM STA 13+00 TO STA 16+00

④ SHOULDER CONSTRUCTED TO NORMAL SUPERELEVATION EXCEPT NOT FLATTER THAN STANDARD SHOULDER FOR NORMAL SLOPES.

⑤ LONGITUDINAL SAWED CONSTRUCTION JOINT

⑥ OPTIONAL TYPE JOINT

NOTE
SEE SHEET R2 FOR SURFACING SCHEDULE

TYPICAL SECTIONS

Preliminary Plans

FILE NAME: P:\CIVIL\147IN6-2021.00\CONTRACT PLANS AND PROPOSAL\CONTRACT PLAN SET\ROADWAY\R0020JTS.DGN
USER: tvonbehren
DATE PLOTTED: January 2, 2012
E-SHEET NAME:
MicroStation v8.11.7.443

COUNTY OF	ITEM NO.	SHEET NO.
CAMPBELL	6-2021.00	R2k

I–471 RAMP TYPICAL SECTIONS – JPC ALTERNATE

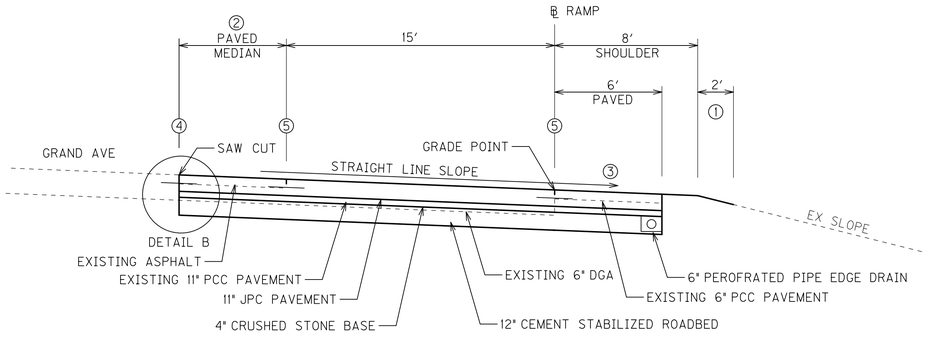

GRAND AVE RAMP E
STA 39+08 TO STA 43+49

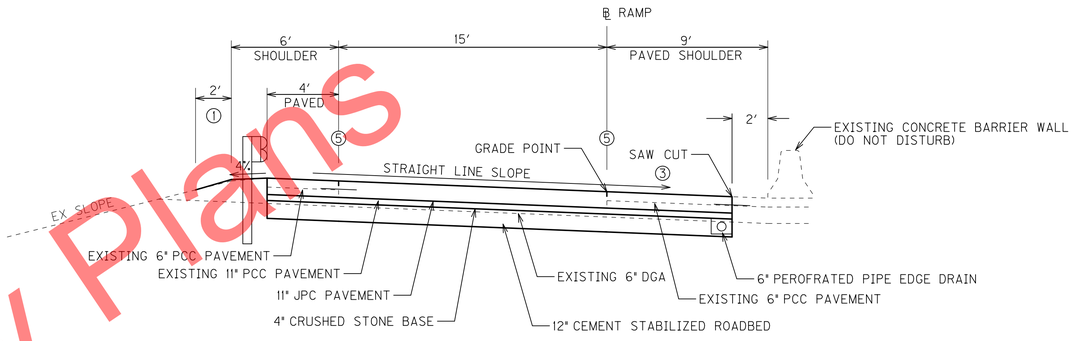

GRAND AVE RAMP K

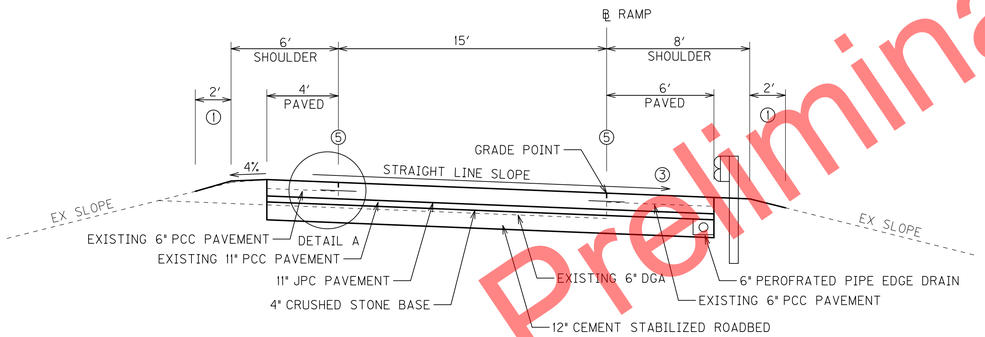

GRAND AVE RAMP E
BEGIN RAMP TO STA 39+08

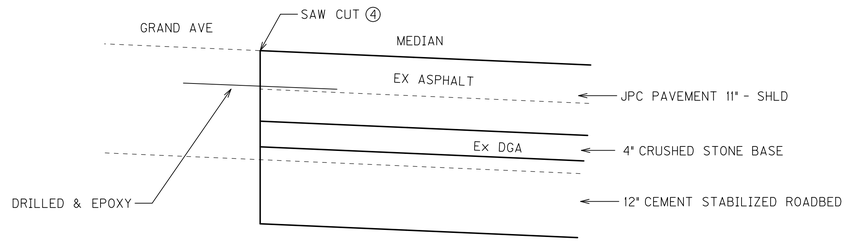

DETAIL B

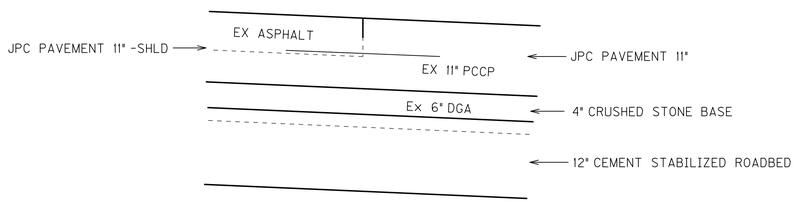

DETAIL A

① ASPHALT SEAL COAT REQUIRED FROM THE OUTSIDE EDGE OF THE PAVED SHOULDER TO A POINT TWO FEET DOWN THE DITCH OR FILL SLOPE OR TO THE OUTER EDGE OF THE DGA, WHICHEVER IS LESS. 2 APPLICATIONS, SEE SHEET R2

② TAPERS FROM 10′ @ STA 39+08 TO 6′ @ STA 43+49

③ SHOULDER CONSTRUCTED TO NORMAL SUPERELEVATION EXCEPT NOT FLATTER THAN STANDARD SHOULDER FOR NORMAL SLOPES.

④ LONGITUDINAL SAWED CONSTRUCTION JOINT

⑤ OPTIONAL TYPE JOINT

NOTE

SEE SHEET R2 FOR SURFACING SCHEDULE

TYPICAL SECTIONS

Preliminary Plans

FILE NAME: P:\CIVIL\147\N6-2021.00\CONTRACT PLANS AND PROPOSAL\CONTRACT PLAN SET\ROADWAY\R002OKTS.DGN
USER: tvonbehren
DATE PLOTTED: January 2, 2012
E-SHEET NAME:
MicroStation v8.11.7.443

COUNTY OF	ITEM NO.	SHEET NO.
CAMPBELL	6-2021.00	R2L

I-471 TYPICAL SECTIONS – ASPHALT ALTERNATE SURFACING SCHEDULE

NEW CONSTRUCTION USING FLEXIBLE PAVEMENT

FULL DEPTH ASPHALT PAVEMENT REPLACEMENT

I-471 BEGIN PROJECT TO STA 261+30.61
I-275 RAMPS A, B, C, D, E, F, G, AND H

DRIVING LANES

12" CEMENT STABILIZED ROADBED
- 58.7 LBS/SY CEMENT
- 2.0 LBS/SY ASPHALT CURING SEAL
- 5.0 LBS/SY SAND FOR BLOTTER

APPROXIMATELY 22.5" BASE
- 4 INCH DGA
- 1.6 LBS/SY ASPHALT CURING SEAL
- 5.0 LBS/SY SAND FOR BLOTTER
- 4 DRAINAGE BLANKET TYPE II - ASPH
- 4 INCH CL4 ASPHALT BASE 1.00D PG64-22
- 4 INCH CL4 ASPHALT BASE 1.00D PG64-22
- 3.5 INCH CL4 ASPHALT BASE 1.00D PG64-22
- 3 INCH CL4 ASPHALT BASE 1.00D PG76-22

APPROXIMATELY 1.25" SURFACE ..... 1.25 INCH CL4 ASPHALT SURFACE 0.38A PG76-22

SHOULDERS (INSIDE)

12" CEMENT STABILIZED ROADBED
- 58.7 LBS/SY CEMENT
- 2.0 LBS/SY ASPHALT CURING SEAL
- 5.0 LBS/SY SAND FOR BLOTTER

APPROXIMATELY 22.5" BASE
- 4 INCH DGA
- 1.6 LBS/SY ASPHALT CURING SEAL
- 5.0 LBS/SY SAND FOR BLOTTER
- 4 INCH DRAINAGE BLANKET TYPE II - ASPH
- 4 INCH CL3 ASPHALT BASE 1.00D PG64-22
- 4 INCH CL3 ASPHALT BASE 1.00D PG64-22
- 3.5 INCH CL3 ASPHALT BASE 1.00D PG64-22
- 3 INCH CL3 ASPHALT BASE 1.00D PG64-22

APPROXIMATELY 1.25" SURFACE ..... 1.25 INCH CL34 ASPHALT SURFACE 0.38D PG64-22

① ASPHALT SEAL COAT (2 APPLICATIONS) ..... 2.40 LBS/SQ YD ASPHALT SEAL COAT
20 LBS/SQ YD ASPHALT SEAL AGGREGATE (Size No. 8 or 9M)

SHOULDERS (OUTSIDE)

12" CEMENT STABILIZED ROADBED
- 58.7 LBS/SY CEMENT
- 2.0 LBS/SY ASPHALT CURING SEAL
- 5.0 LBS/SY SAND FOR BLOTTER

APPROXIMATELY 22.5" BASE
- 4 INCH DGA
- 1.6 LBS/SY ASPHALT CURING SEAL
- 5.0 LBS/SY SAND FOR BLOTTER
- 4 INCH DRAINAGE BLANKET TYPE II - ASPH
- 4 INCH DRAINAGE BLANKET TYPE II - ASPH
- 4 INCH CL3 ASPHALT BASE 1.00D PG64-22
- 3.5 INCH CL3 ASPHALT BASE 1.00D PG64-22
- 3 INCH CL3 ASPHALT BASE 1.00D PG64-22

APPROXIMATELY 1.25" SURFACE ..... 1.25 INCH CL3 ASPHALT SURFACE 0.38D PG64-22

① ASPHALT SEAL COAT (2 APPLICATIONS) ..... 2.40 LBS/SQ YD ASPHALT SEAL COAT
20 LBS/SQ YD ASPHALT SEAL AGGREGATE
(Size No. 8 or 9M)

① ASPHALT SEAL COAT REQUIRED FROM THE OUTSIDE EDGE OF THE PAVED SHOULDER TO A POINT TWO FEET DOWN THE DITCH OR FILL SLOPE OR TO THE EDGE OF THE DGA, WHICHEVER IS LESS

FULL DEPTH ASPHALT PAVEMENT REPLACEMENT

US 27 RAMPS A, B, C AND D
GRAND AVENUE RAMPS E, EE, F, H AND K
MEMORIAL PARKWAY RAMPS A, D, N AND M

DRIVING LANES

12" CEMENT STABILIZED ROADBED
- 58.7 LBS/SY CEMENT
- 2.0 LBS/SY ASPHALT CURING SEAL
- 5.0 LBS/SY SAND FOR BLOTTER

APPROXIMATELY 18.5" BASE
- 4 INCH DGA
- 1.6 LBS/SY ASPHALT CURING SEAL
- 5.0 LBS/SY SAND FOR BLOTTER
- 4 DRAINAGE BLANKET TYPE II - ASPH
- 4 INCH CL4 ASPHALT BASE 1.00D PG64-22
- 3.5 INCH CL4 ASPHALT BASE 1.00D PG64-22
- 3 INCH CL4 ASPHALT BASE 1.00D PG76-22

APPROXIMATELY 1.25" SURFACE ..... 1.25 INCH CL4 ASPHALT SURFACE 0.38A PG76-22

SHOULDERS

12" CEMENT STABILIZED ROADBED
- 58.7 LBS/SY CEMENT
- 2.0 LBS/SY ASPHALT CURING SEAL
- 5.0 LBS/SY SAND FOR BLOTTER

APPROXIMATELY 18.5" BASE
- 4 INCH DGA
- 1.6 LBS/SY ASPHALT CURING SEAL
- 5.0 LBS/SY SAND FOR BLOTTER
- 4 INCH DRAINAGE BLANKET TYPE II - ASPH
- 4 INCH CL3 ASPHALT BASE 1.00D PG64-22
- 3.5 INCH CL3 ASPHALT BASE 1.00D PG64-22
- 3 INCH CL3 ASPHALT BASE 1.00D PG64-22

APPROXIMATELY 1.25" SURFACE ..... 1.25 INCH CL3 ASPHALT SURFACE 0.38D PG64-22

① ASPHALT SEAL COAT (2 APPLICATIONS) ..... 2.40 LBS/SQ YD ASPHALT SEAL COAT
20 LBS/SQ YD ASPHALT SEAL AGGREGATE (Size No. 8 or 9M)

TEMPORARY ASPHALT WEDGE DETAIL

(INSIDE SHOULDER ONLY)

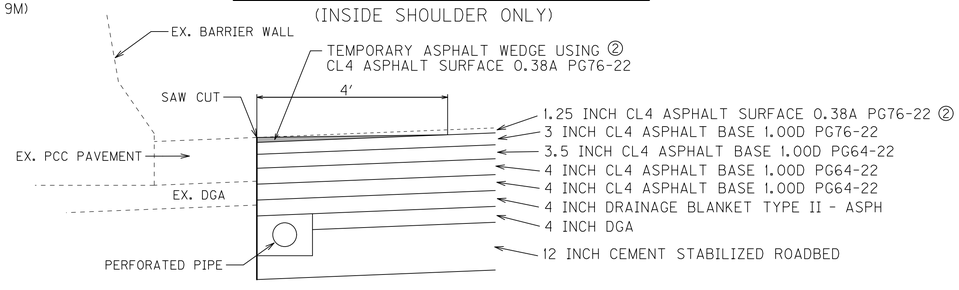

② THE SURFACE COURSE IS NOT TO BE PLACED UNTIL ALL AREAS OF THE DIRECTION UNDER CONSTRUCTION HAVE THEIR FINAL BASE COURSE PLACED. AN ASPHALT WEDGE, USING THE ASPHALT SURFACE COURSE MATERIAL, IS TO BE PLACED FROM THE SAW CUT LINE AT THE EXISTING PCC PAVEMENT AND TAPERED TO THE FINAL BASE COURSE IN A DISTANCE OF 4 FEET TO PROVIDE POSITIVE DRAINAGE UNTIL THE SURFACE COURSE IS PLACED. REMOVAL OF THE WEDGE, PRIOR TO PLACING THE FINAL SURFACE COURSE, WILL BE INCIDENTAL TO THE BID ITEM FOR THE ASPHALT SURFACE COURSE. A QUANTITY HAS BEEN INCLUDED WITH THE CL4 ASPHALT SURFACE 0.38A PG76-22 BID ITEM SHOWN IN THE PAVING SUMMARY FOR THIS WEDGE.

Preliminary Plans

TYPICAL SECTIONS

MicroStation v8.11.7.443 | E-SHEET NAME: | USER: tvonbehren DATE PLOTTED: January 2, 2012 | FILE NAME: P:\CIVIL\147\6-2021.00\CONTRACT PLANS AND PROPOSAL\CONTRACT PLAN SET\ROADWAY\R0020LTS.DGN

COUNTY OF	ITEM NO.	SHEET NO.
CAMPBELL	6-2021.00	R2m

I–471 TYPICAL SECTIONS – ASPHALT ALTERNATE

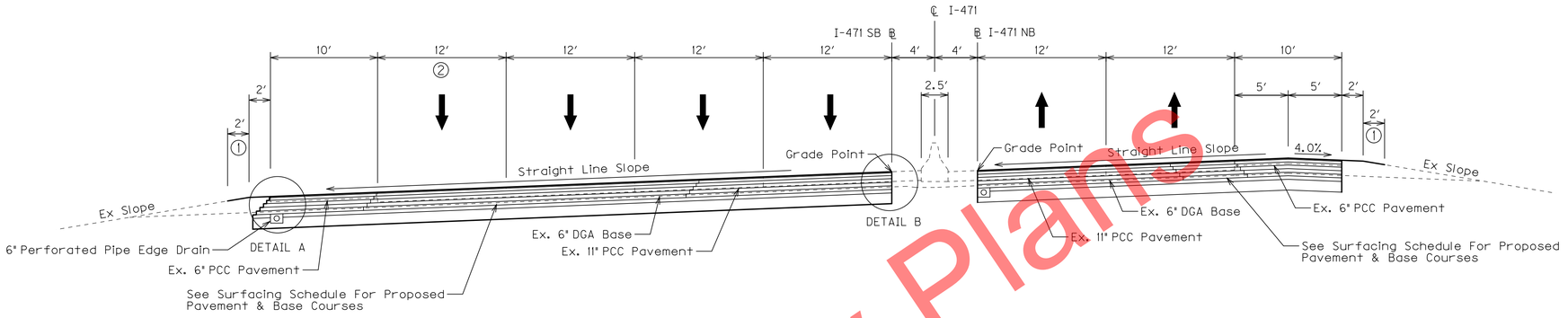

SUPERELEVATED SECTION
I-471 STA BEGIN PROJECT TO STA 21+89.35
I-471 SB STA 21+89.35 TO STA 24+88.37
I-471 NB STA 21+89.35 TO STA 27+45.98

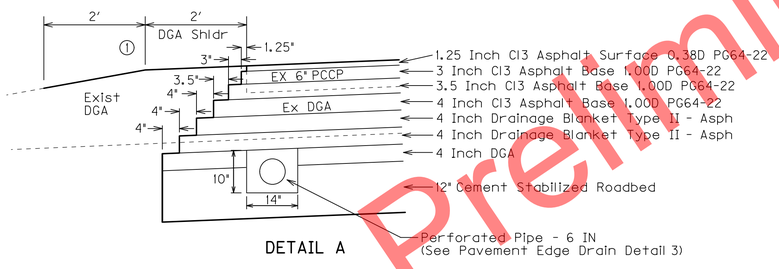

DETAIL A

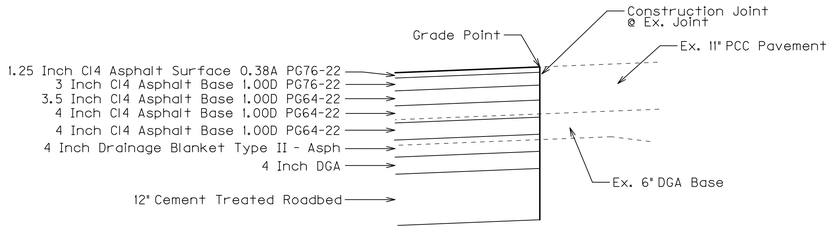

DETAIL B

① ASPHALT SEAL COAT REQUIRED FROM THE OUTSIDE EDGE OF THE PAVED SHOULDER TO A POINT TWO FEET DOWN THE DITCH OR FILL SLOPE OR TO THE EDGE OF THE DGA, WHICHEVER IS LESS. 2 APPLICATIONS, SEE SHEET R2L

② TAPERS FROM 12′ AT STA 16+49.5 TO 0′ AT STA 19+09.5

NOTE
SEE SHEET R2L FOR SURFACING SCHEDULE

TYPICAL SECTIONS

Preliminary Plans

FILE NAME: P:\CIVIL\147IN6-2021.00\CONTRACT PLANS AND PROPOSAL\CONTRACT PLAN SET\ROADWAY\R002OMTS.DGN
USER: tvonbehren
DATE PLOTTED: January 2, 2012
E-SHEET NAME:
MicroStation v8.11.7.443

COUNTY OF	ITEM NO.	SHEET NO.
CAMPBELL	6-2021.00	R2n

I–471 TYPICAL SECTIONS – ASPHALT ALTERNATE

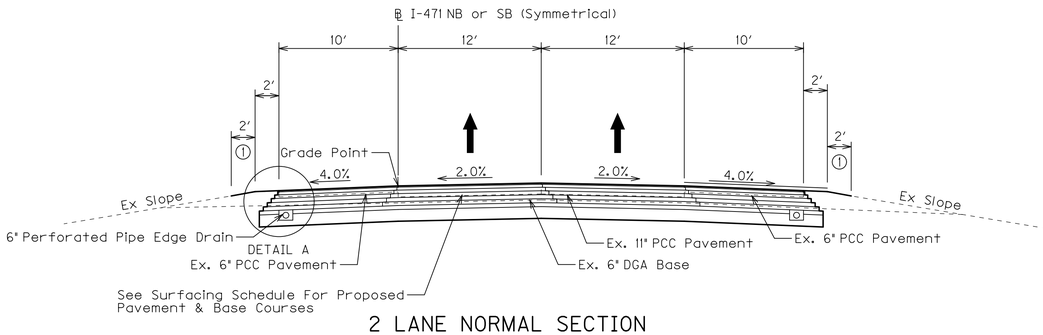

2 LANE NORMAL SECTION
I-471 NB OR SB

③ EXISTING SHOULDER IS 8′ (6′ PAVED) ON I-471 SB FROM STA 24+88 TO I-275 RAMP D. SHOULDER IS TO BE WIDENED TO 10.75′ (8.75′ PAVED).

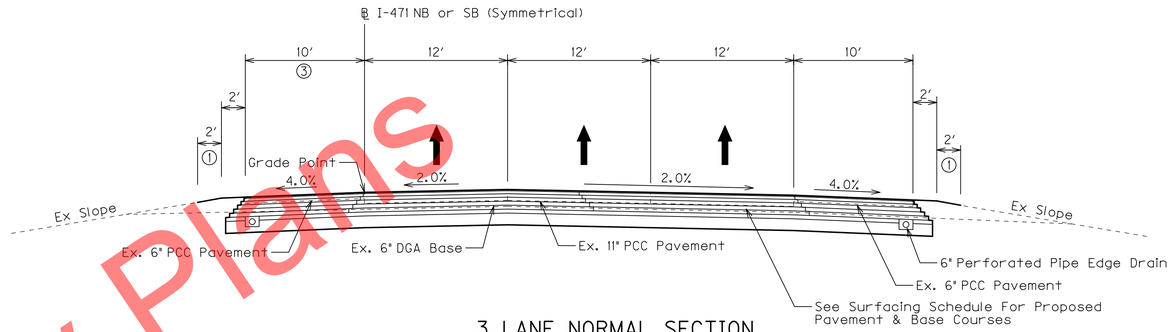

3 LANE NORMAL SECTION
I-471 NB OR SB

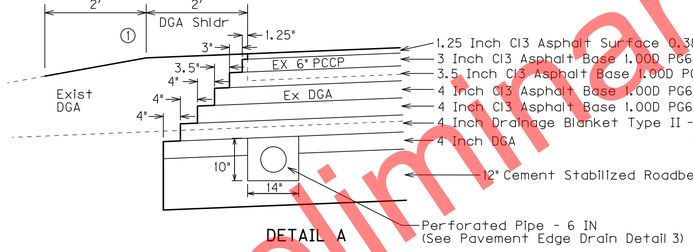

DETAIL A

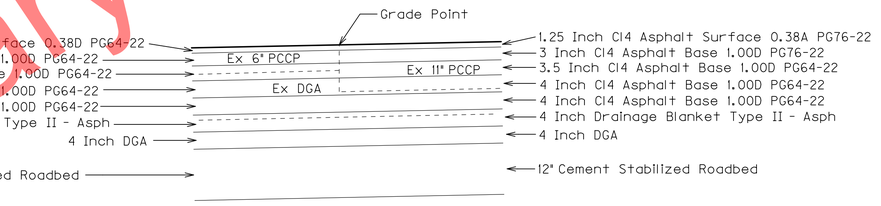

DETAIL B

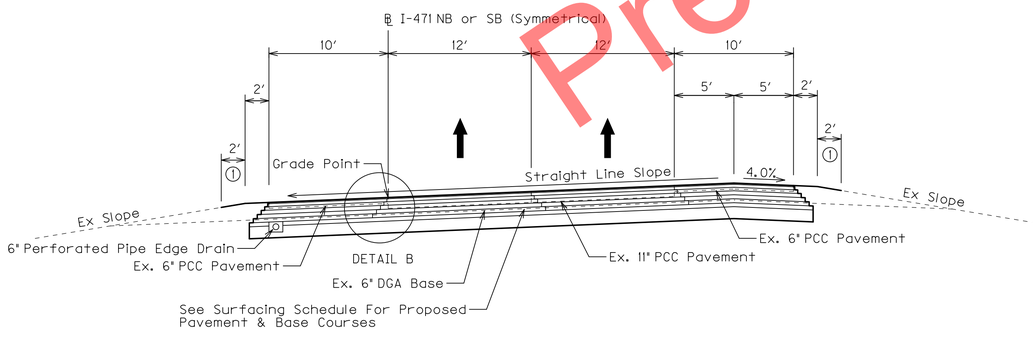

2 LANE SUPERELEVATED SECTION
I-471 NB OR SB

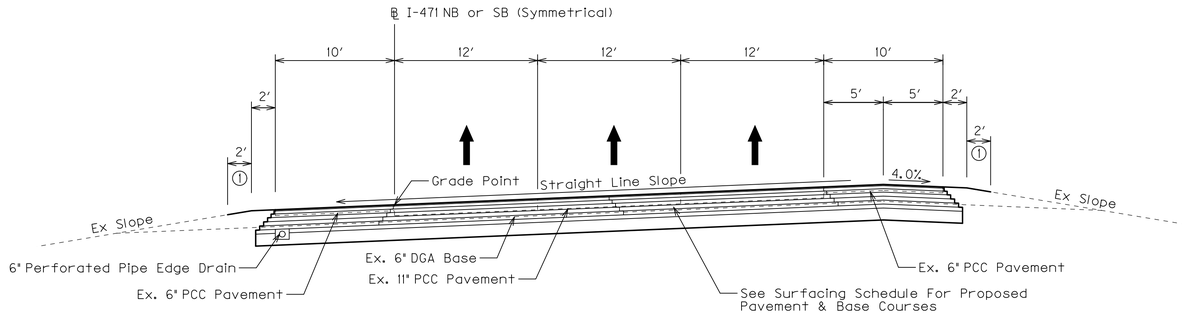

3 LANE SUPERELEVATED SECTION
I-471 NB OR SB

① ASPHALT SEAL COAT REQUIRED FROM THE OUTSIDE EDGE OF THE PAVED SHOULDER TO A POINT TWO FEET DOWN THE DITCH OR FILL SLOPE OR TO THE LIMITS OF THE DGA, WHICHEVER IS LESS. 2 APPLICATIONS, SEE SHEET R2L

② THIS CONSTRUCTION JOINT IS TO BE LOCATED AT THE CENTER OF THE MIDDLE LANE UNLESS OTHERWISE APPROVED BY THE ENGINEER. THE USE OF A HOOK BOLT WITH EXPANSION ANCHORS FOR TYING THE LONGITUDINAL JOINT WILL NOT BE PERMITTED.

NOTE
SEE SHEET R2L FOR SURFACING SCHEDULE

TYPICAL SECTIONS

Preliminary Plans

FILE NAME: P:\CIVIL\I471\6-2021.00\CONTRACT PLANS AND PROPOSAL\CONTRACT PLAN SET\ROADWAY\R02CONTS.DGN
USER: tvonbehren
DATE PLOTTED: January 2, 2012
E-SHEET NAME:
MicroStation v8.11.7.443

COUNTY OF	ITEM NO.	SHEET NO.
CAMPBELL	6-2021.00	R2o

I–471 TYPICAL SECTIONS – ASPHALT ALTERNATE

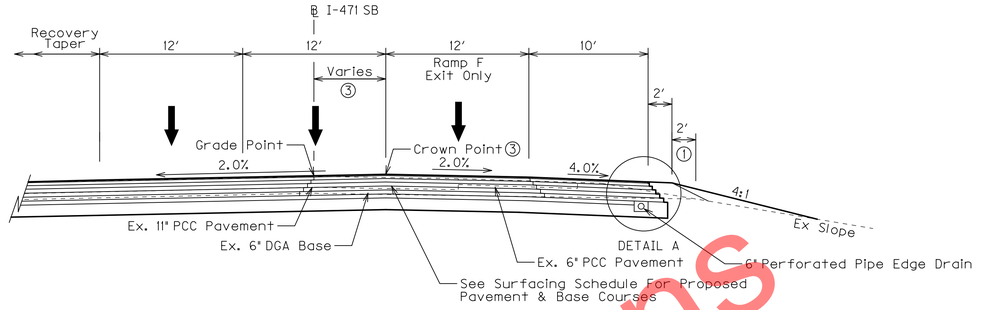

I-471 SB STA 73+50

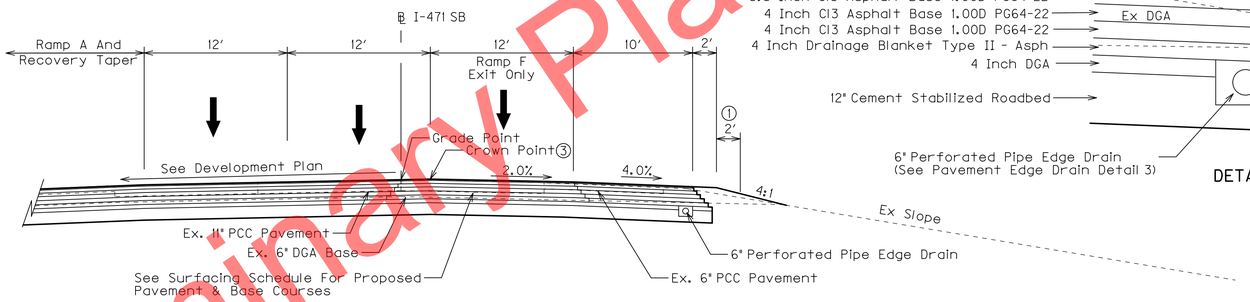

I-471 SB
STA 70+99.86 TO STA 81+00

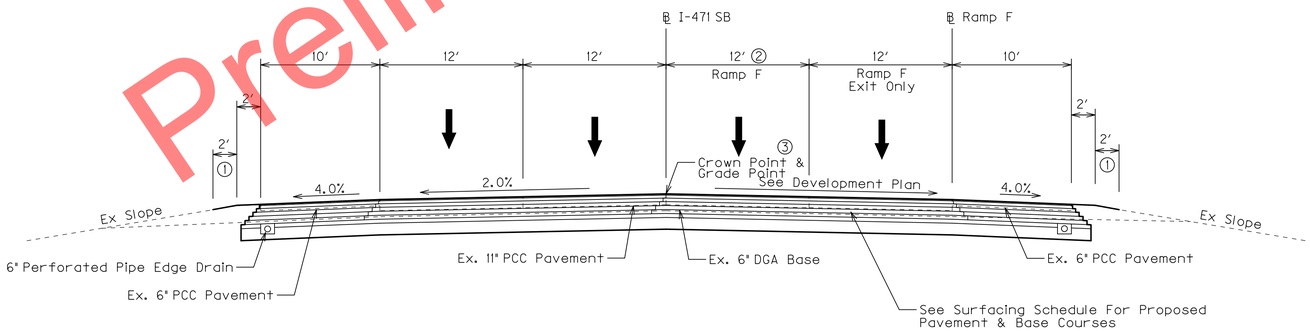

I-471 SB STA 66+57.58 TO STA 70+99.86

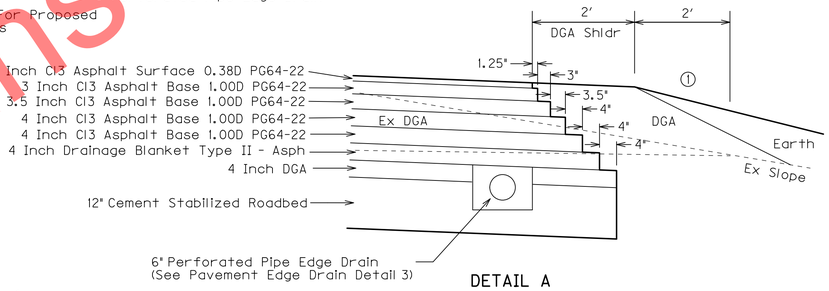

DETAIL A

① ASPHALT SEAL COAT REQUIRED FROM THE OUTSIDE EDGE OF THE PAVED SHOULDER TO A POINT TWO FEET DOWN THE DITCH OR FILL SLOPE OR TO THE LIMITS OF THE DGA, WHICHEVER IS LESS. 2 APPLICATIONS, SEE SHEET R2L

② TAPERS FROM 12′ TO 0′ FROM STA 66+57.58 TO STA 70+99.86 SEE DEVELOPMENT PLAN

③ CROWN LOCATION TAPERS FROM 0′ RT TO 12′ RT OF ℄ I-471 SB FROM STA 69+27.95 TO STA 77+67.95 SEE DEVELOPMENT PLAN

NOTE
SEE SHEET R2L FOR SURFACING SCHEDULE

TYPICAL SECTIONS

Preliminary Plans

FILE NAME: P:\CIVIL\147\N6-2021.00\CONTRACT PLANS AND PROPOSAL\CONTRACT PLAN SET\ROADWAY\R0220OTS.DGN
USER: tvonbehren
DATE PLOTTED: January 2, 2012
E-SHEET NAME:
MicroStation v8.11.7.443

COUNTY OF	ITEM NO.	SHEET NO.
CAMPBELL	6-2021.00	R2p

I-471 TYPICAL SECTIONS – ASPHALT ALTERNATE

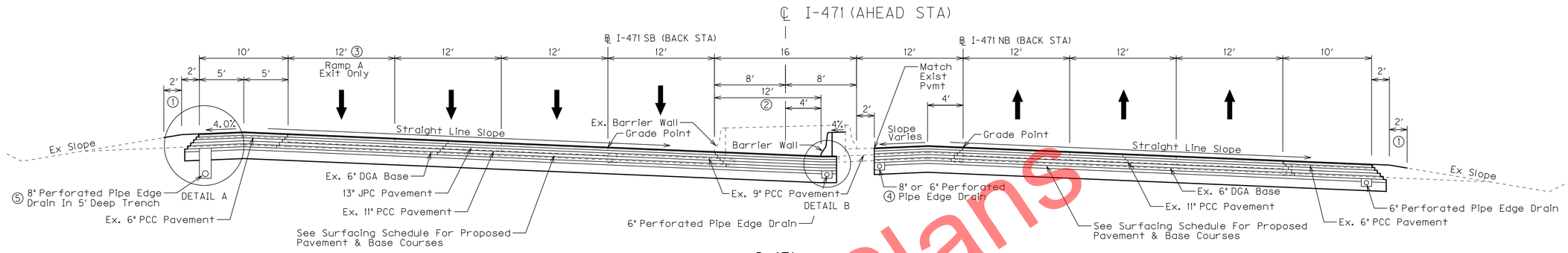

I-471
STA 89+32.89 (STA EQUATION) TO STA 99+44.90

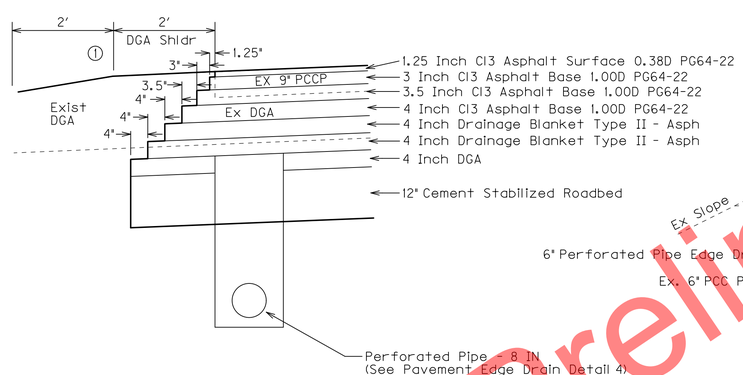

DETAIL A

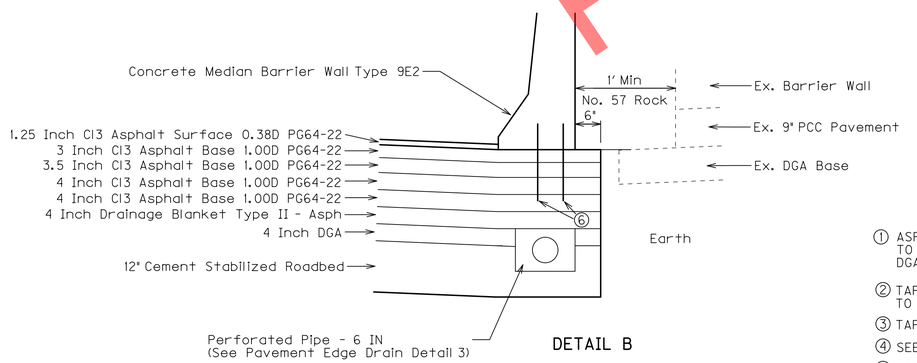

DETAIL B

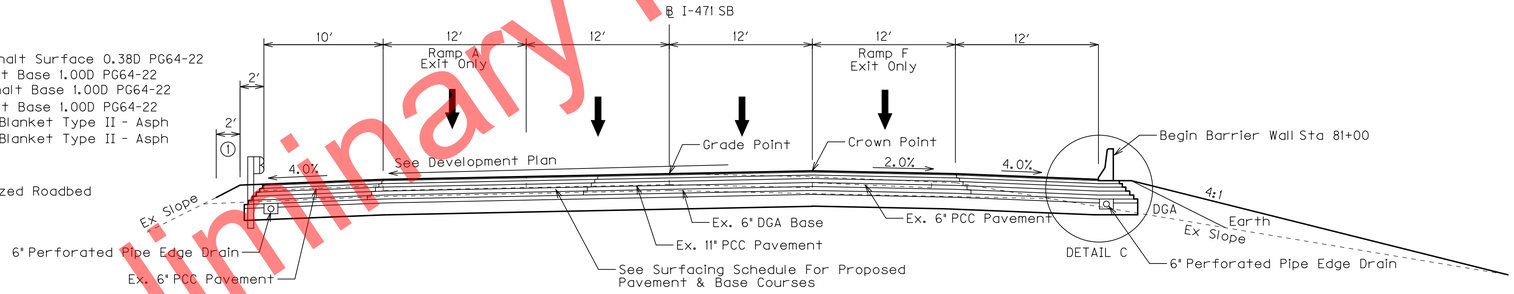

I-471 SB
STA 81+00 TO STA 85+80.36 (STA EQUATION)

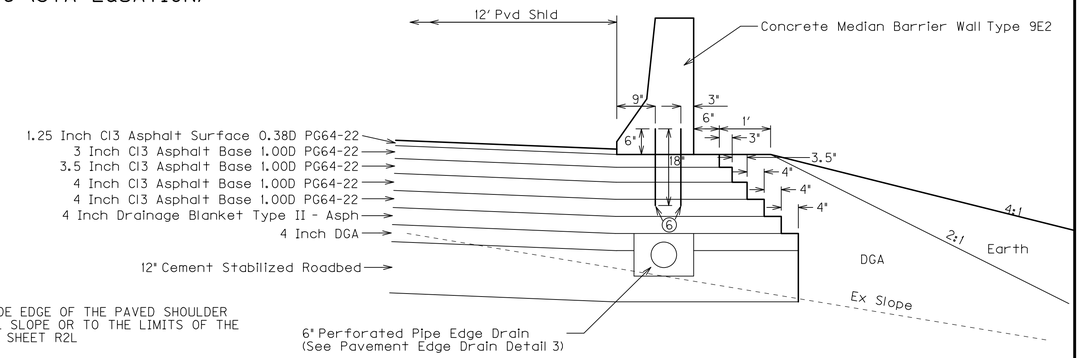

DETAIL C

① ASPHALT SEAL COAT REQUIRED FROM THE OUTSIDE EDGE OF THE PAVED SHOULDER TO A POINT TWO FEET DOWN THE DITCH OR FILL SLOPE OR TO THE LIMITS OF THE DGA, WHICHEVER IS LESS. 2 APPLICATIONS, SEE SHEET R2L

② TAPERS TO 0′ TO MATCH EXISTING BARRIER WALL FROM STA 90+69.90 TO STA 99+44.9 SEE PLAN

③ TAPER FROM 12′ TO 0′ FROM STA 91+00 TO STA 94+00 I-471

④ SEE PERFORATED PIPE SUMMARY FOR SIZES AND STATIONS

⑤ SEE PERFORATED PIPE SUMMARY FOR STATIONS

⑥ NO. 8 DOWEL BARS SPACED 4′ O.C. AND STAGGERED 2′. SEE STD DWG RBM-001-09

NOTE
SEE SHEET R2L FOR SURFACING SCHEDULE

TYPICAL SECTIONS

Preliminary Plans

FILE NAME: P:\CIVIL\471\6-2021.00\CONTRACT PLANS AND PROPOSAL\CONTRACT PLAN SET\ROADWAY\R002OPTS.DGN
USER: tvonbehren
DATE PLOTTED: January 2, 2012
E-SHEET NAME:
MicroStation v8.11.7.443

COUNTY OF	ITEM NO.	SHEET NO.
CAMPBELL	6-2021.00	R2q

I-471 TYPICAL SECTIONS - ASPHALT ALTERNATE

I-471
STA 99+44.90 TO STA 160+50 &
STA 189+67.20 TO STA 244+79.59
(EXISTING 3 LANE SECTION)

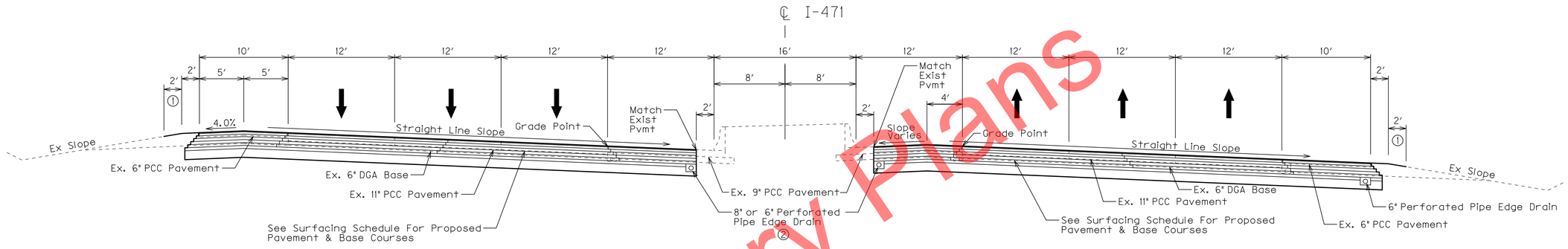

SUPERELEVATED SECTION

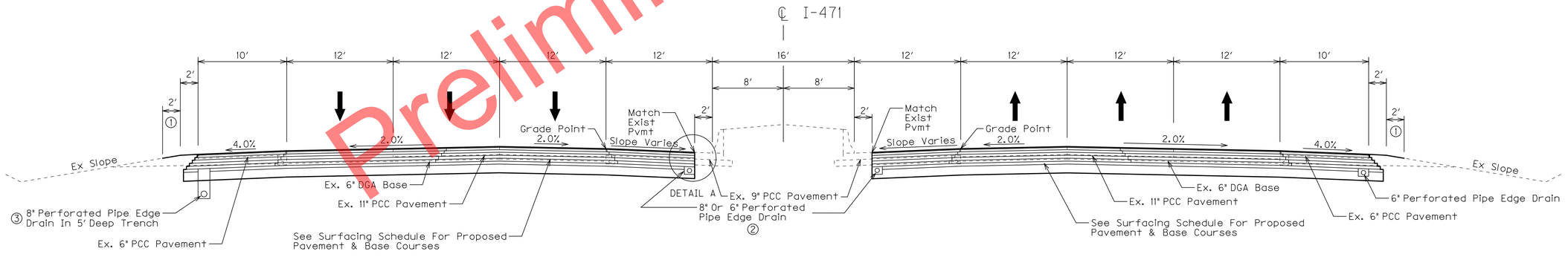

NORMAL SECTION

① ASPHALT SEAL COAT REQUIRED FROM THE OUTSIDE EDGE OF THE PAVED SHOULDER TO A POINT TWO FEET DOWN THE DITCH OR FILL SLOPE OR TO THE LIMITS OF THE DGA, WHICHEVER IS LESS. 2 APPLICATIONS, SEE SHEET R2L

② SEE PERFORATED PIPE SUMMARY FOR SIZES AND STATIONS

③ SEE PERFORATED PIPE SUMMARY FOR STATIONS

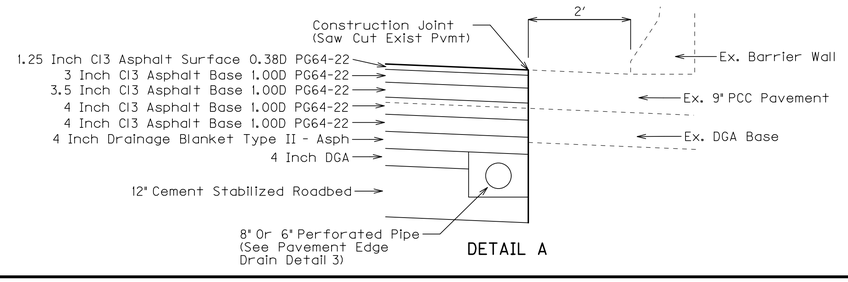

DETAIL A

NOTE
SEE SHEET R2L FOR SURFACING SCHEDULE

TYPICAL SECTIONS

Preliminary Plans

FILE NAME: P:\CIVIL\147\N6-2021.00\CONTRACT PLANS AND PROPOSAL\CONTRACT PLAN SET\ROADWAY\R002007S.DGN
USER: tvonbehren
DATE PLOTTED: January 2, 2012
E-SHEET NAME:
MicroStation v8.11.7.443

COUNTY OF	ITEM NO.	SHEET NO.
CAMPBELL	6-2021.00	R2r

I–471 TYPICAL SECTIONS – ASPHALT ALTERNATE

I-471
STA 160+50 TO STA 189+67.20
(EXISTING 4 LANE SECTION)

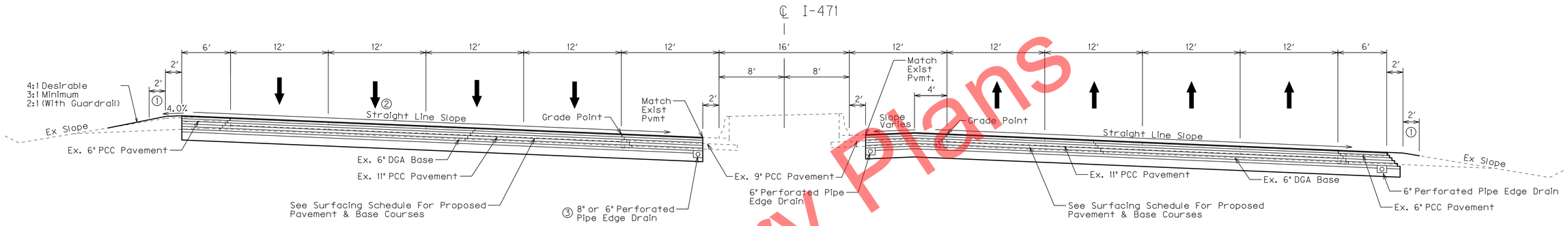

SUPERELEVATED SECTION

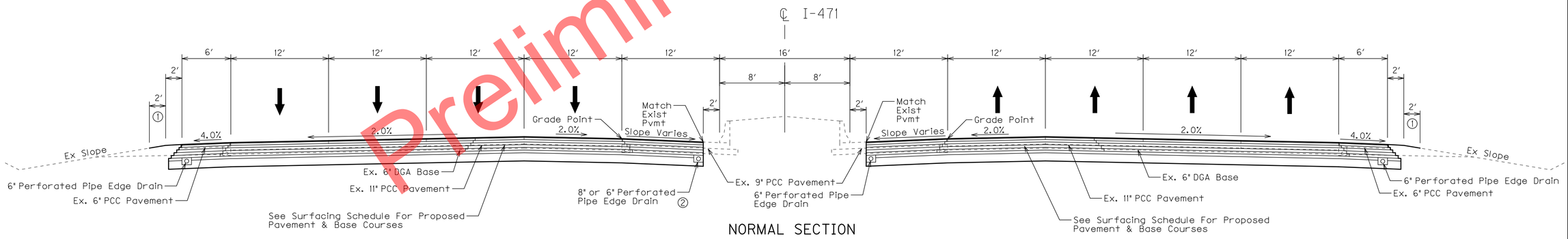

NORMAL SECTION

① ASPHALT SEAL COAT REQUIRED FROM THE OUTSIDE EDGE OF THE PAVED SHOULDER TO A POINT TWO FEET DOWN THE DITCH OR FILL SLOPE OR TO THE LIMITS OF THE DGA, WHICHEVER IS LESS. 2 APPLICATIONS, SEE SHEET R2L

② SEE PERFORATED PIPE SUMMARY FOR SIZES AND STATIONS

NOTE
SEE SHEET R2L FOR SURFACING SCHEDULE

TYPICAL SECTIONS

Preliminary Plans

FILE NAME: P:\CIVIL\147N\6-2021.00\CONTRACT PLANS AND PROPOSAL\CONTRACT PLAN SET\ROADWAY\R0020RTS.DGN
USER: tvonbehren
DATE PLOTTED: January 2, 2012
E-SHEET NAME:
MicroStation v8.11.7.443

COUNTY OF	ITEM NO.	SHEET NO.
CAMPBELL	6-2021.00	R2s

I–471 TYPICAL SECTIONS – ASPHALT ALTERNATE

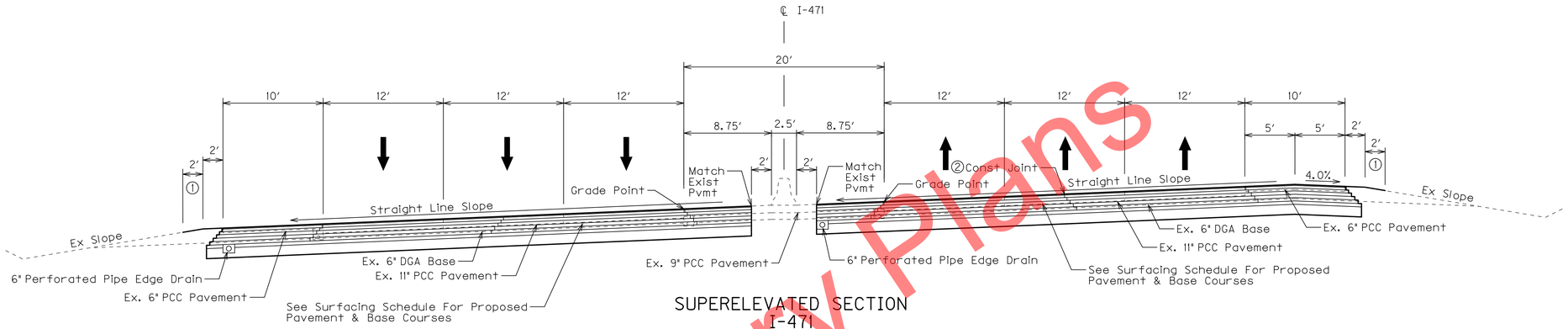

SUPERELEVATED SECTION
I-471
STA 252+63.48 TO STA 256+13.48

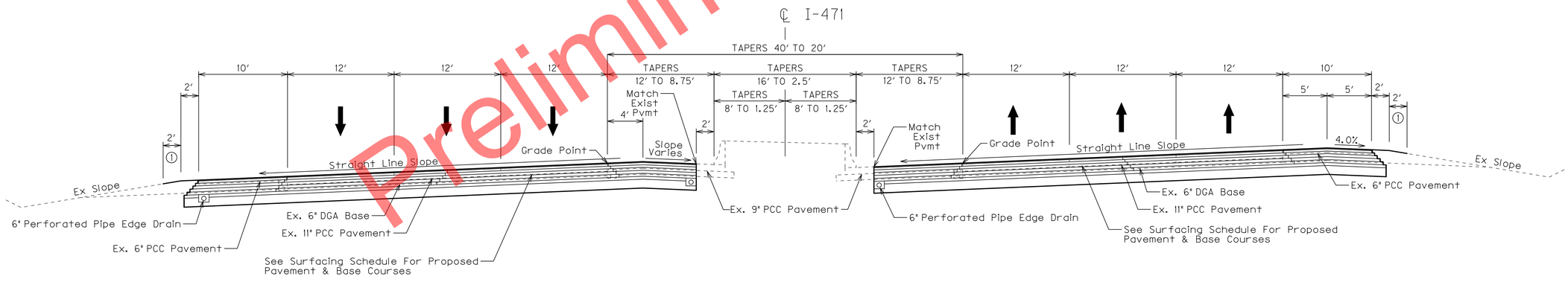

SUPERELEVATED SECTION
I-471
STA 244+79.59 TO STA 252+63.48

① ASPHALT SEAL COAT REQUIRED FROM THE OUTSIDE EDGE OF THE PAVED SHOULDER TO A POINT TWO FEET DOWN THE DITCH OR FILL SLOPE OR TO THE LIMITS OF THE DGA, WHICHEVER IS LESS. 2 APPLICATIONS, SEE SHEET R2L

NOTE
SEE SHEET R2L FOR SURFACING SCHEDULE

TYPICAL SECTIONS

Preliminary Plans

FILE NAME: P:\CIVIL\147IN6-2021.00\CONTRACT PLANS AND PROPOSAL\CONTRACT PLAN SET\ROADWAY\R0020STS.DGN
USER: tvonbehren
DATE PLOTTED: January 2, 2012
E-SHEET NAME:
MicroStation v8.11.7.443

COUNTY OF	ITEM NO.	SHEET NO.
CAMPBELL	6-2021.00	R2†

I–471 TYPICAL SECTIONS – ASPHALT ALTERNATE

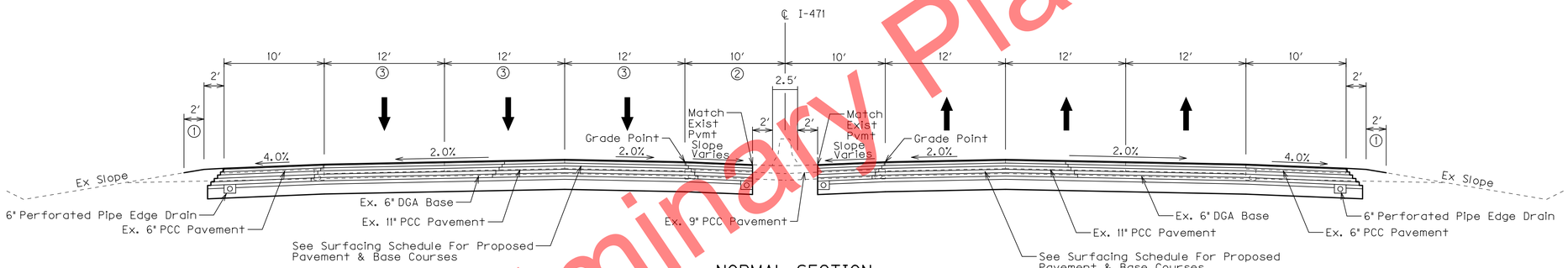

NORMAL SECTION
I-471
STA 256+13.48 TO STA 261+30.61 (BEGIN BRIDGE)

Preliminary Plans

① ASPHALT SEAL COAT REQUIRED FROM THE OUTSIDE EDGE OF THE PAVED SHOULDER TO A POINT TWO FEET DOWN THE DITCH OR FILL SLOPE OR TO THE LIMITS OF THE DGA, WHICHEVER IS LESS. 2 APPLICATIONS, SEE SHEET R2L

② STA 260+37 BEGIN 360′ TAPER TO 5′ @ STA 263+97 (ON BRIDGE)

③ STA 260+37 BEGIN 360′ TAPER TO 11.5′ @ STA 263+97 (ON BRIDGE)

NOTE
SEE SHEET R2L FOR SURFACING SCHEDULE

TYPICAL SECTIONS

FILE NAME: P:\CIVIL\147\6-2021.00\CONTRACT PLANS AND PROPOSAL\CONTRACT PLAN SET\ROADWAY\R0020TTS.DGN
USER: tvonbehren
DATE PLOTTED: January 2, 2012
E-SHEET NAME:
MicroStation v8.11.7.443

COUNTY OF	ITEM NO.	SHEET NO.
CAMPBELL	6-2021.00	R2u

I–275 RAMP A TYPICAL SECTION – ASPHALT ALTERNATE

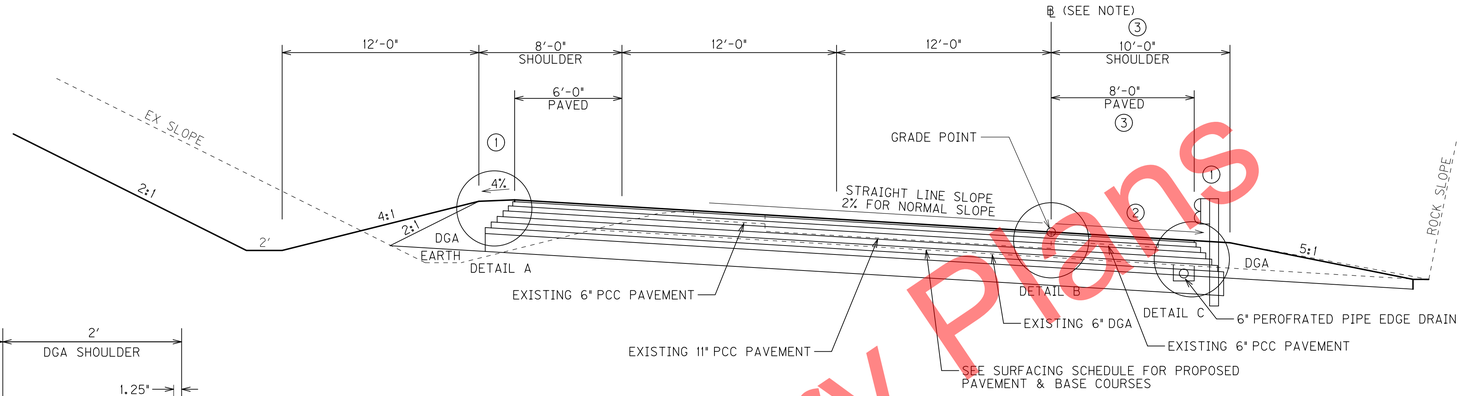

I-275 RAMP A

SEE CROSS SECTIONS FOR SLOPES OUTSIDE SHOULDERS LIMITS

(1) ASPHALT SEAL COAT REQUIRED FROM THE OUTSIDE EDGE OF THE PAVED SHOULDER TO A POINT TWO FEET DOWN THE DITCH OR FILL SLOPE OR TO THE OUTER EDGE OF THE DGA, WHICHEVER IS LESS. 2 APPLICATIONS, SEE SHEET R2L

(2) SHOULDER CONSTRUCTED TO NORMAL SUPERELEVATION EXCEPT NOT FLATTER THAN STANDARD SHOULDER FOR NORMAL SLOPES.

(3) 8' (6' PAVED) STA 0+00 TO STA 8+63, 10' (8' PAVED) STA 8+63 TO STA 22+30

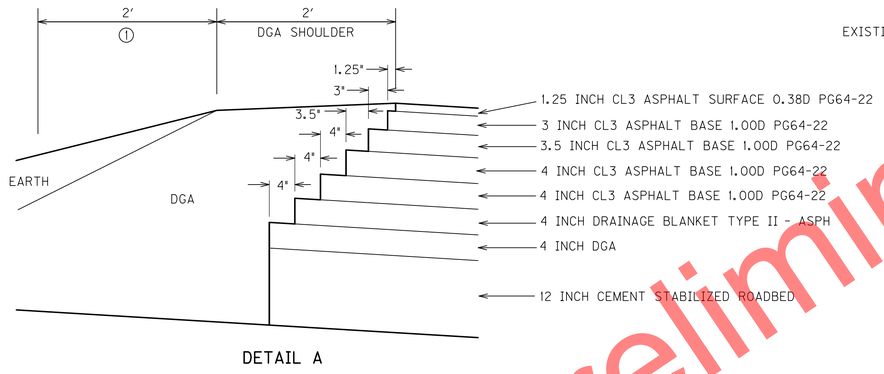

DETAIL A

NOTES:

THE RAMP A BASELINE DIVERGES FROM THE EXITING EDGE OF PAVEMENT BEGINNING APPROXIMATELY STA 15+50 TO APPROXIMATELY THREE FEET RIGHT OF THE EXISTING BASELINE AT STA 21+81.68.

SEE SHEET R2L FOR SURFACING SCHEDULE

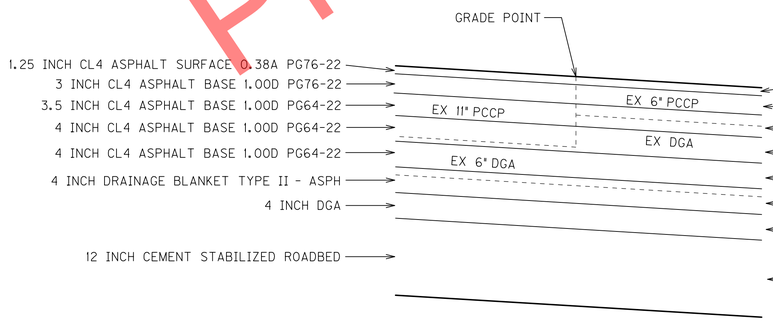

DETAIL B

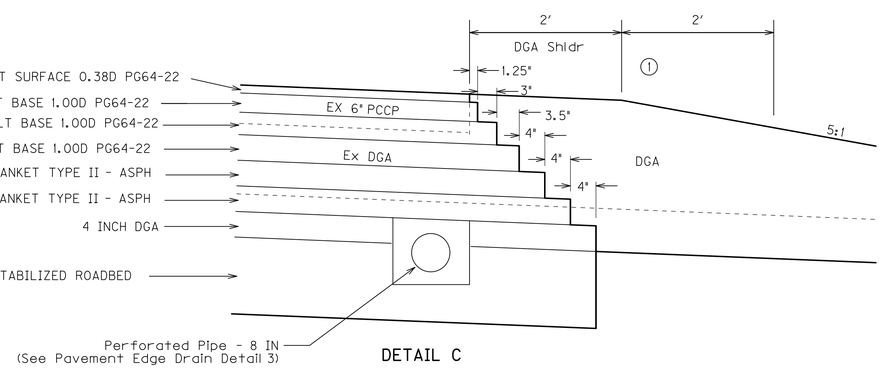

DETAIL C

TYPICAL SECTIONS

Preliminary Plans

MicroStation v8.11.7.443
E-SHEET NAME:
USER: tvanbehren
DATE PLOTTED: January 2, 2012
FILE NAME: P:\CIVIL\147\6-2021.00\CONTRACT PLANS AND PROPOSAL\CONTRACT PLAN SET\ROADWAY\R02OUTS.DGN

COUNTY OF	ITEM NO.	SHEET NO.
CAMPBELL	6-2021.00	R2v

I–471 RAMP TYPICAL SECTIONS – ASPHALT ALTERNATE

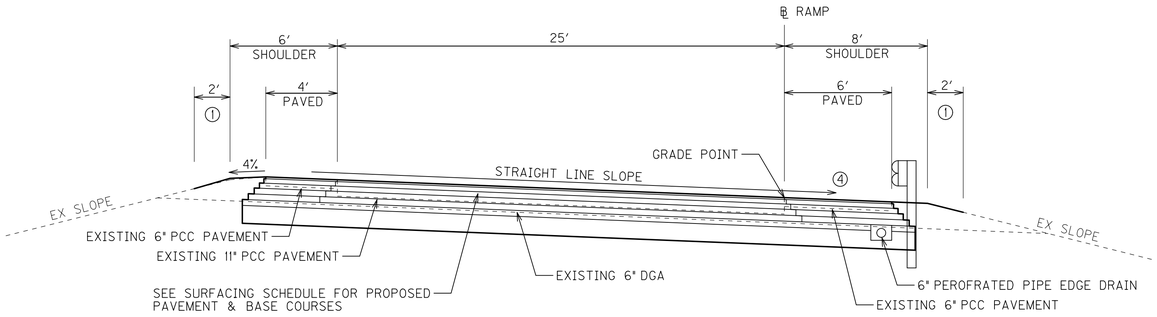

GRAND AVE RAMP F

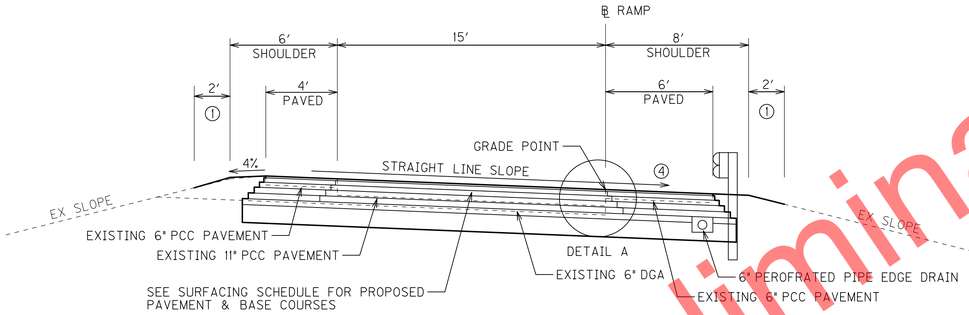

US 27 RAMPS A, B, AND D
GRAND AVE RAMPS EE AND H
MEMORIAL PKWY RAMPS A, D, N AND M

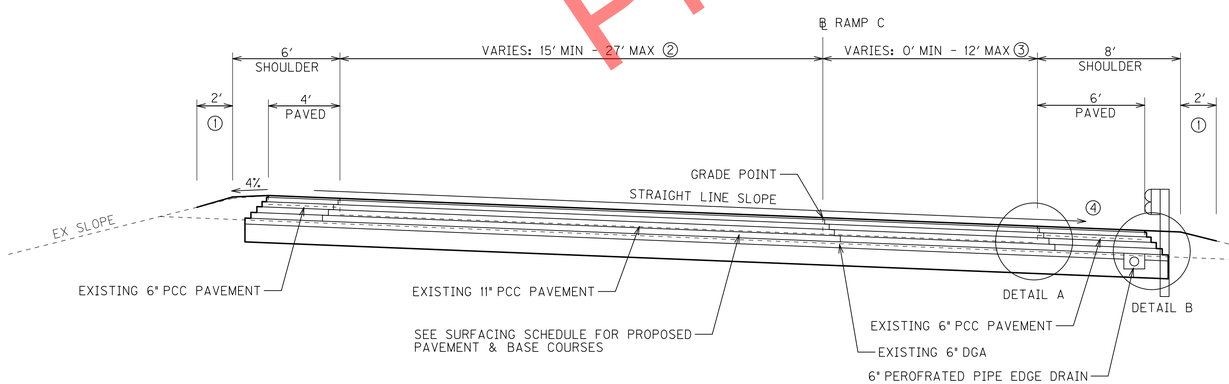

US 27 RAMP C

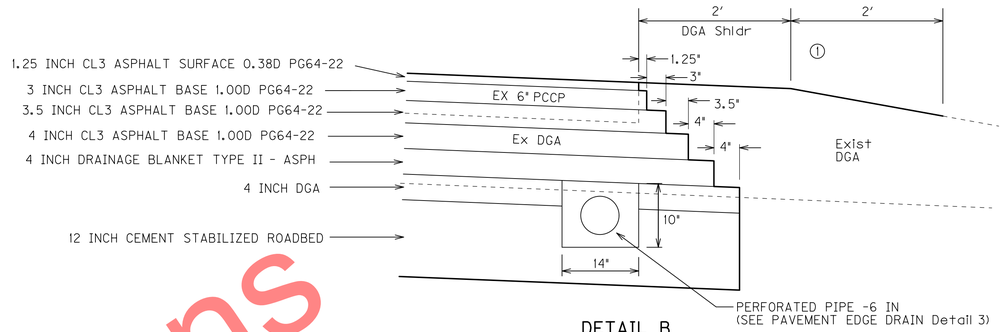

DETAIL B

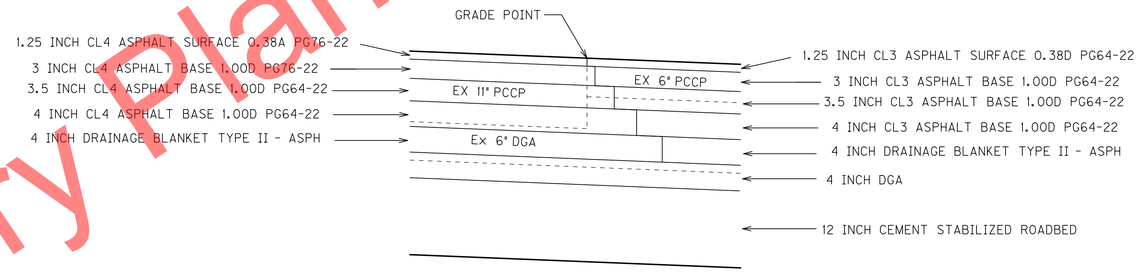

DETAIL A

RECONSTRUCT ISLAND DETAIL

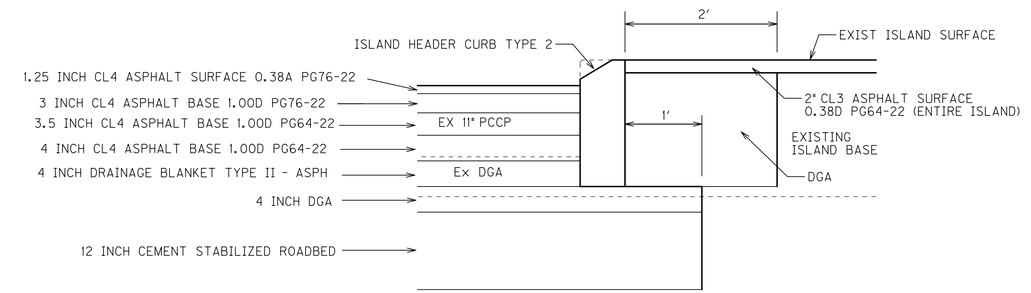

NOTE: SAW CUTTING OF THE EXISTING ISLAND SURFACE AND REMOVAL OF EXISTING CURB, ISLAND SURFACE, AND ALL MATERIAL REQUIRED TO CONSTRUCT THE NEW CURB AND PAVEMENT WILL BE INCIDENTAL TO THE NEW ISLAND CURB BID ITEM.

① ASPHALT SEAL COAT REQUIRED FROM THE OUTSIDE EDGE OF THE PAVED SHOULDER TO A POINT TWO FEET DOWN THE DITCH OR FILL SLOPE OR TO THE OUTER EDGE OF THE DGA, WHICHEVER IS LESS. 2 APPLICATIONS, SEE SHEET R2L

② TAPERS FROM 15′ TO 18′ FROM STA 11+50 TO STA 13+00. TAPERS FROM 18′ TO 27′ FROM STA 13+00 TO STA 16+00

③ TAPERS FROM 0′ TO 12′ FROM STA 13+00 TO STA 16+00

④ SHOULDER CONSTRUCTED TO NORMAL SUPERELEVATION EXCEPT NOT FLATTER THAN STANDARD SHOULDER FOR NORMAL SLOPES.

NOTE

SEE SHEET R2L FOR SURFACING SCHEDULE

TYPICAL SECTIONS

Preliminary Plans

FILE NAME: P:\CIVIL\147\N6-2021.00\CONTRACT PLANS AND PROPOSAL\CONTRACT PLAN SET\ROADWAY\R0020VTS.DGN
USER: tvonbehren
DATE PLOTTED: January 2, 2012
E-SHEET NAME:
MicroStation v8.11.7.443

FILE NAME: P:\CIVIL\471\6-2021.00\CONTRACT PLANS AND PROPOSAL\CONTRACT PLAN SET\ROADWAY\RO02DWTS.DGN
USER: tvonbehren
DATE PLOTTED: January 2, 2012
E-SHEET NAME:
MicroStation v8.11.7.443

COUNTY OF	ITEM NO.	SHEET NO.
CAMPBELL	6-2021.00	R2w

I-471 RAMP TYPICAL SECTIONS - ASPHALT ALTERNATE

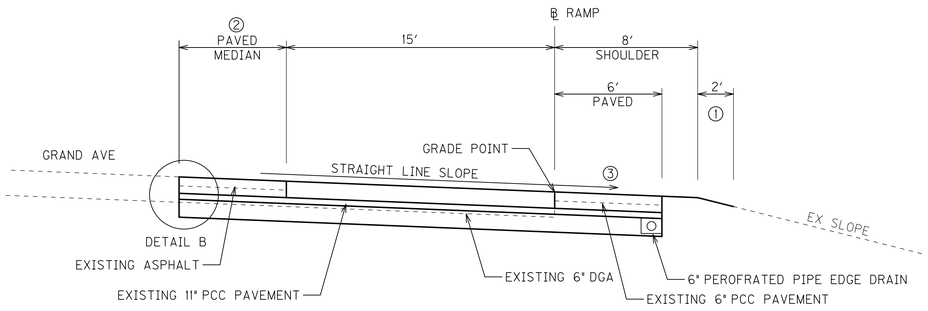

GRAND AVE RAMP E
STA 39+08 TO STA 43+49

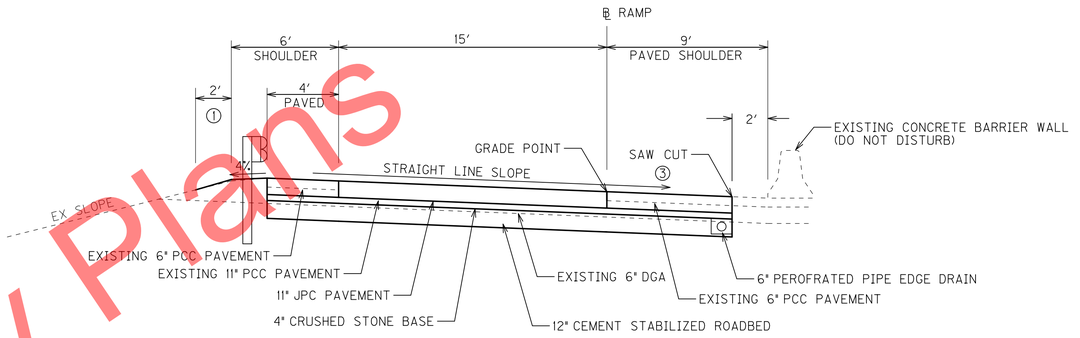

GRAND AVE RAMP K

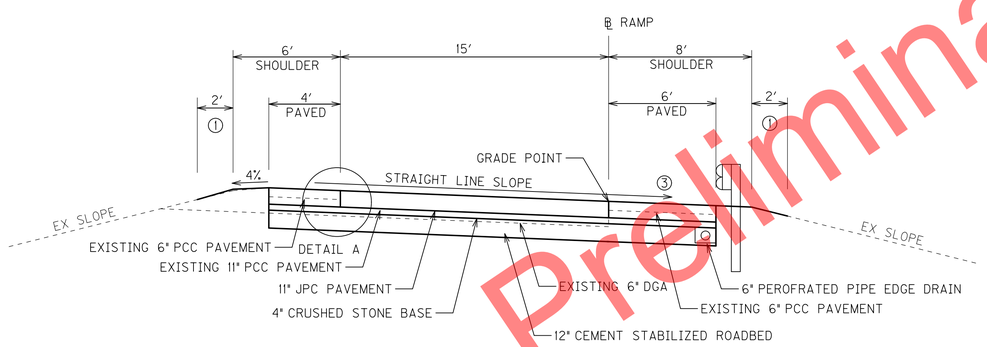

GRAND AVE RAMP E
BEGIN RAMP TO STA 39+08

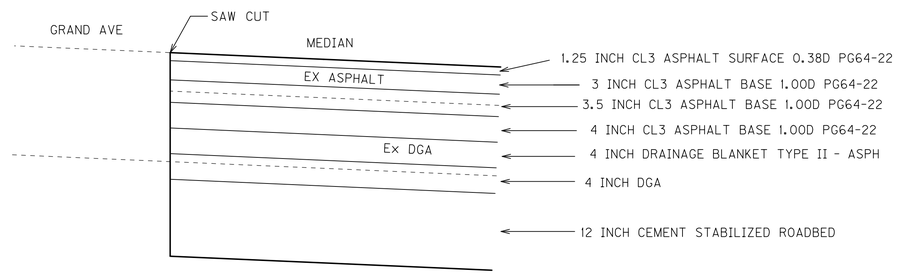

DETAIL B

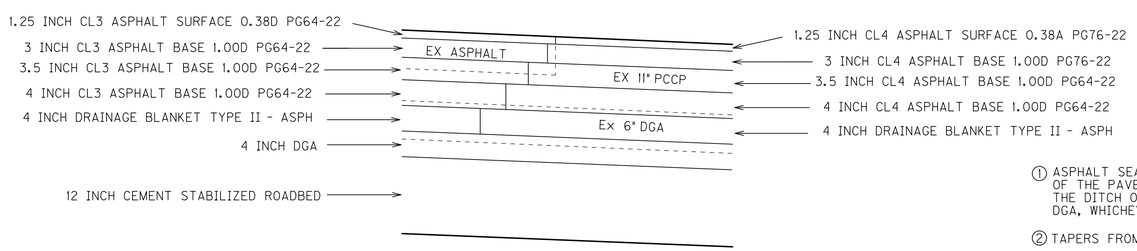

DETAIL A

① ASPHALT SEAL COAT REQUIRED FROM THE OUTSIDE EDGE OF THE PAVED SHOULDER TO A POINT TWO FEET DOWN THE DITCH OR FILL SLOPE OR TO THE OUTER EDGE OF THE DGA, WHICHEVER IS LESS. 2 APPLICATIONS, SEE SHEET R2L

② TAPERS FROM 10' @ STA 39+08 TO 6' @ STA 43+49

③ SHOULDER CONSTRUCTED TO NORMAL SUPERELEVATION EXCEPT NOT FLATTER THAN STANDARD SHOULDER FOR NORMAL SLOPES.

NOTE
SEE SHEET R2L FOR SURFACING SCHEDULE

TYPICAL SECTIONS

Preliminary Plans

COUNTY OF	ITEM NO.	SHEET NO.
CAMPBELL	6-2021.00	R2x

I-471 TYPICAL SECTIONS – NO ALTERNATE

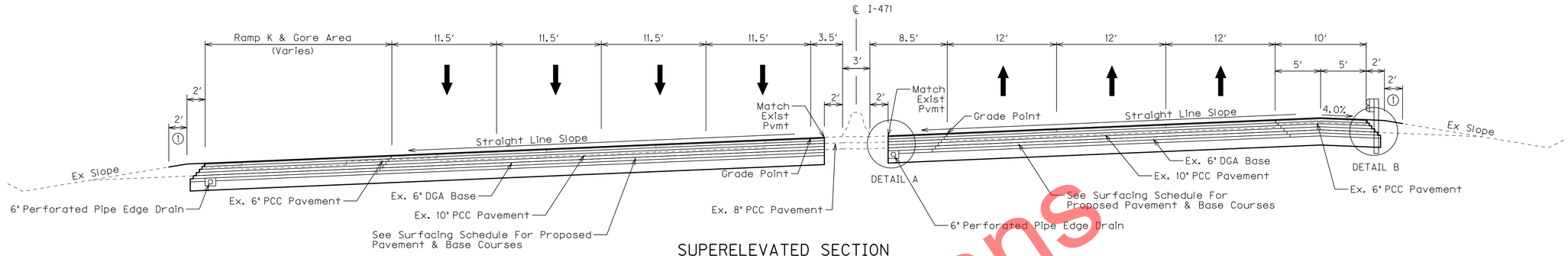

SUPERELEVATED SECTION
I-471
STA 282+96.77 (END BRIDGE) TO STA 287+67.39
(BEGIN SHOULDER BARRIER WALL LT)

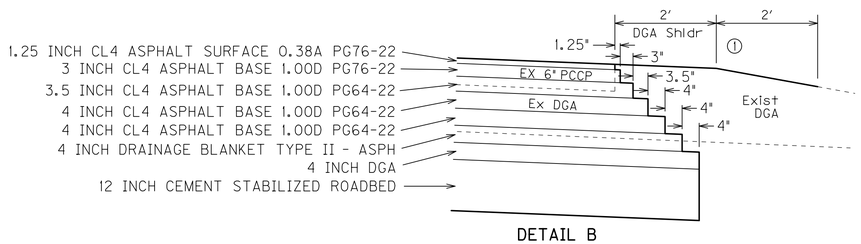

DETAIL B

① ASPHALT SEAL COAT REQUIRED FROM THE OUTSIDE EDGE OF THE PAVED SHOULDER TO A POINT TWO FEET DOWN THE DITCH OR FILL SLOPE OR TO THE EDGE OF THE DGA, WHICHEVER IS LESS

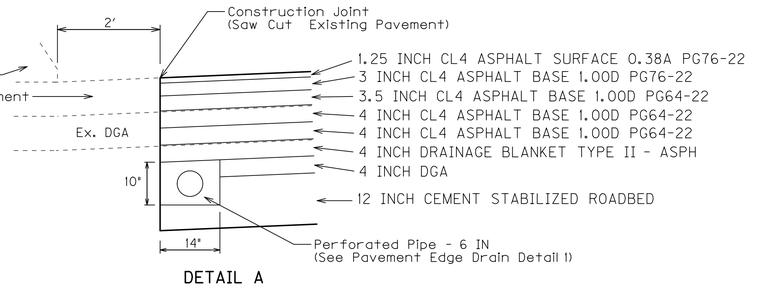

DETAIL A

TEMPORARY ASPHALT WEDGE DETAIL

(INSIDE SHOULDER ONLY)

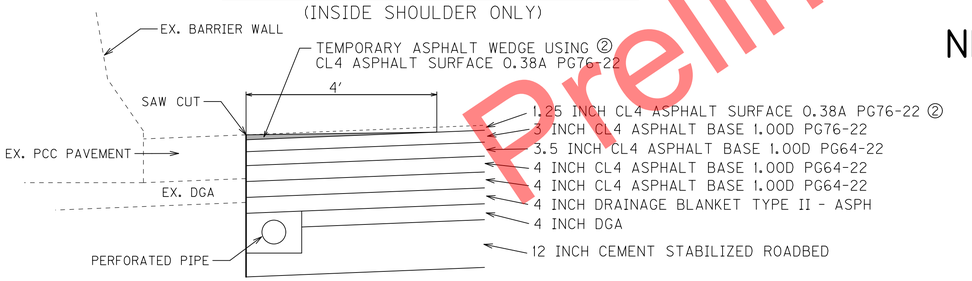

② THE SURFACE COURSE IS NOT TO BE PLACED UNTIL ALL AREAS OF THE DIRECTION UNDER CONSTRUCTION HAVE THEIR FINAL BASE COURSE PLACED. AN ASPHALT WEDGE, USING THE ASPHALT SURFACE COURSE MATERIAL, IS TO BE PLACED FROM THE SAW CUT LINE AT THE EXISTING PCC PAVEMENT AND TAPERED TO THE FINAL BASE COURSE IN A DISTANCE OF 4 FEET TO PROVIDE POSITIVE DRAINAGE UNTIL THE SURFACE COURSE IS PLACED. REMOVAL OF THE WEDGE, PRIOR TO PLACING THE FINAL SURFACE COURSE, WILL BE INCIDENTAL TO THE BID ITEM FOR THE ASPHALT SURFACE COURSE. A QUANTITY HAS BEEN INCLUDED WITH THE CL4 ASPHALT SURFACE 0.38A PG76-22 BID ITEM SHOWN IN THE PAVING SUMMARY FOR THIS WEDGE.

SURFACING SCHEDULE

NEW CONSTRUCTION USING FLEXIBLE PAVEMENT

FULL DEPTH ASPHALT PAVEMENT REPLACEMENT

I-471 STA 282+96.77 TO OHIO RIVER BRIDGE
KY 8 RAMP A, KY 8 RAMP B, KY 8 RAMP K

DRIVING LANES & SHOULDERS

12" CEMENT STABILIZED ROADBED ·····	58.7 LBS/SY CEMENT
	2.0 LBS/SY ASPHALT CURING SEAL
	5.0 LBS/SY SAND FOR BLOTTER
APPROXIMATELY 22.5" BASE ·····	4 INCH DGA
	1.6 LBS/SY ASPHALT CURING SEAL
	5.0 LBS/SY SAND FOR BLOTTER
	4 DRAINAGE BLANKET TYPE II - ASPH
	4 INCH CL4 ASPHALT BASE 1.00D PG64-22
	4 INCH CL4 ASPHALT BASE 1.00D PG64-22
	3.5 INCH CL4 ASPHALT BASE 1.00D PG64-22
	3 INCH CL4 ASPHALT BASE 1.00D PG76-22
APPROXIMATELY 1.25" SURFACE ·····	1.25 INCH CL4 ASPHALT SURFACE 0.38A PG76-22
① ASPHALT SEAL COAT (2 APPLICATIONS) ·····	2.40 LBS/SQ YD ASPHALT SEAL COAT 20 LBS/SQ YD ASPHALT SEAL AGGREGATE (Size No. 8 or 9M)

TYPICAL SECTIONS

Preliminary Plans

MicroStation v8.11.7.443
E-SHEET NAME:
USER: tvonbehren
DATE PLOTTED: January 2, 2012
FILE NAME: P:\CIVIL\471N6-2021.00\CONTRACT PLANS AND PROPOSAL\CONTRACT PLAN SET\ROADWAY\R0020XTS.DGN

COUNTY OF	ITEM NO.	SHEET NO.
CAMPBELL	6-2021.00	R2y

I-471 TYPICAL SECTIONS – NO ALTERNATE

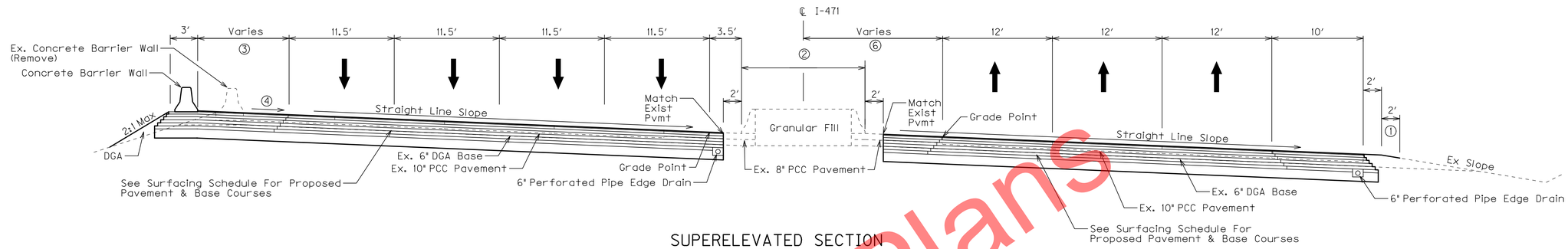

SUPERELEVATED SECTION
I-471
STA 293+59.64 TO STA 295+79.14

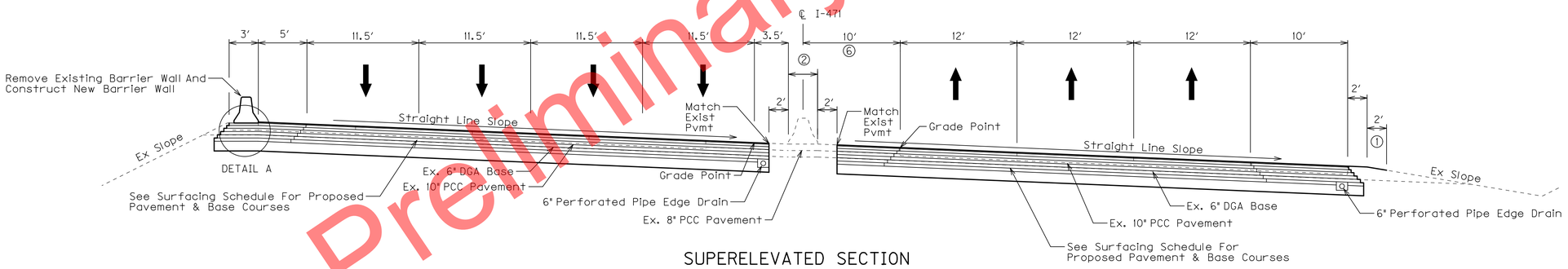

SUPERELEVATED SECTION
I-471
STA 287+68.33 TO STA 293+58.6

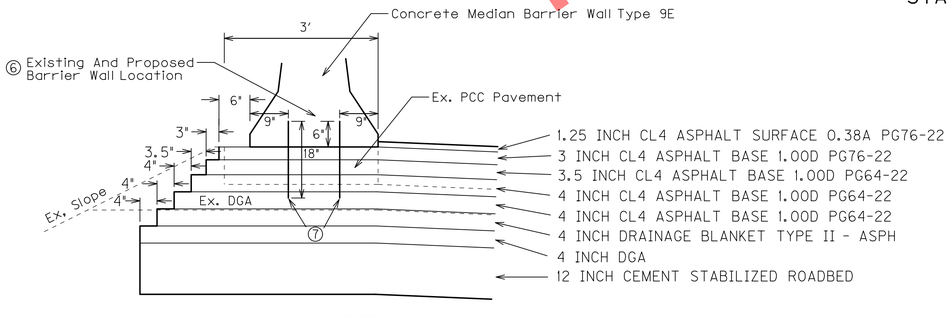

DETAIL A

① ASPHALT SEAL COAT REQUIRED FROM THE OUTSIDE EDGE OF THE PAVED SHOULDER TO A POINT TWO FEET DOWN THE DITCH OR FILL SLOPE OR TO THE LIMITS OF THE DGA, WHICHEVER IS LESS. 2 APPLICATIONS, SEE SHEET R2x

② 3.0′ STA 287+68.33 TO STA 291+75
TAPERS FROM 3.0′ @ STA 291+75 TO 19.1′ @ STA 296+76.75
& 19.5′ @ STA 266+98.7 (OHIO RIVER BRIDGE)

③ TAPERS FROM 5′ @ STA 293+58.69 TO 22′ @ STA 295+79.14 (END OF WALL)

④ VARIES (SEE DEVELOPMENT PLAN)

⑤ VARIES FROM 10′ TO 12′ FROM STA 291+75 TO STA 296+79.75

⑥ BARRIER WALL TO BE PLACED ON TOP BASE LAYER.
SEE STD DWG RBM-001-09 FOR BARRIER WALL DETAILS

⑦ NO. 8 DOWEL BARS SPACED 4′ O.C. AND STAGGERED 2′.
SEE STD DWG RBM-001-09

NOTE
SEE SHEET R2x FOR SURFACING SCHEDULE

TYPICAL SECTIONS

Preliminary Plans

MicroStation v8.11.7.443
E-SHEET NAME:
USER: tvonbehren
DATE PLOTTED: January 2, 2012
FILE NAME: P:\CIVIL\471\N6-2021.00\CONTRACT PLANS AND PROPOSAL\CONTRACT PLAN SET\ROADWAY\R0020YTS.DGN

COUNTY OF	ITEM NO.	SHEET NO.
CAMPBELL	6-2021.00	R2z

I–471 TYPICAL SECTIONS – NO ALTERNATE

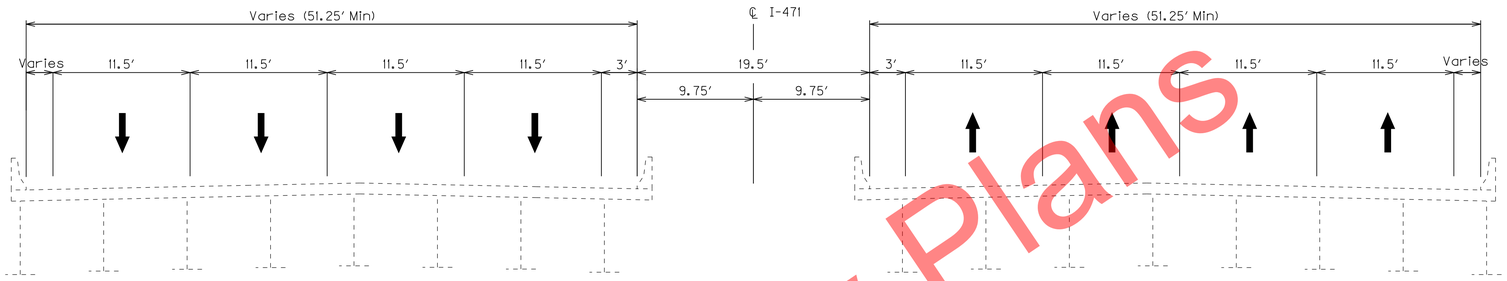

OHIO RIVER BRIDGE

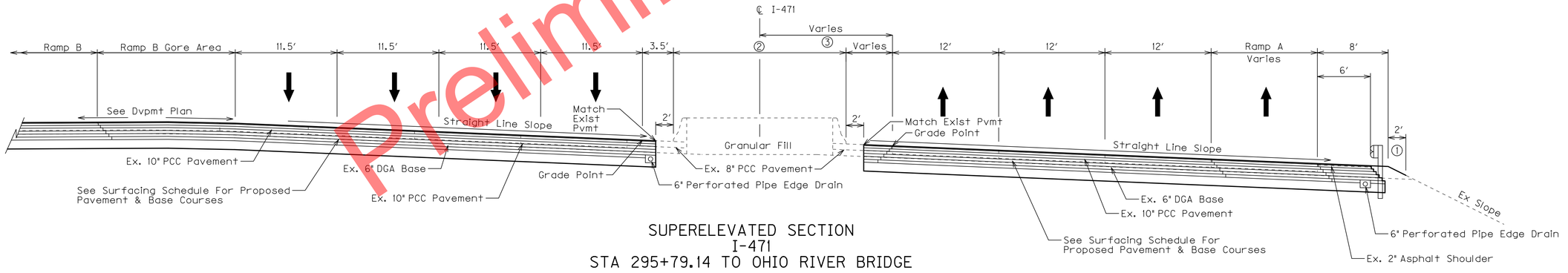

SUPERELEVATED SECTION
I-471
STA 295+79.14 TO OHIO RIVER BRIDGE

① ASPHALT SEAL COAT REQUIRED FROM THE OUTSIDE EDGE OF THE PAVED SHOULDER TO A POINT TWO FEET DOWN THE DITCH OR FILL SLOPE OR TO THE LIMITS OF THE DGA, WHICHEVER IS LESS. 2 APPLICATIONS, SEE SHEET R2x

② TAPERS FROM 3.0' @ STA 291+75 TO 19.1' @ STA 296+76.75 & 19.5' @ STA 296+98.7 (OHIO RIVER BRIDGE)

③ VARIES FROM 10' TO 12' FROM STA 291+75 TO STA 296+79.75

NOTE
SEE SHEET R2x FOR SURFACING SCHEDULE

TYPICAL SECTIONS

Preliminary Plans

FILE NAME: P:\CIVIL\147\N6-2021.00\CONTRACT PLANS AND PROPOSAL\CONTRACT PLAN SET\ROADWAY\R0202TS.DGN
USER: tvonbehren
DATE PLOTTED: January 2, 2012
E-SHEET NAME:
MicroStation v8.11.7.443

I–471 RAMP TYPICAL SECTIONS – NO ALTERNATE

COUNTY OF	ITEM NO.	SHEET NO.
CAMPBELL	6-2021.00	R2aa

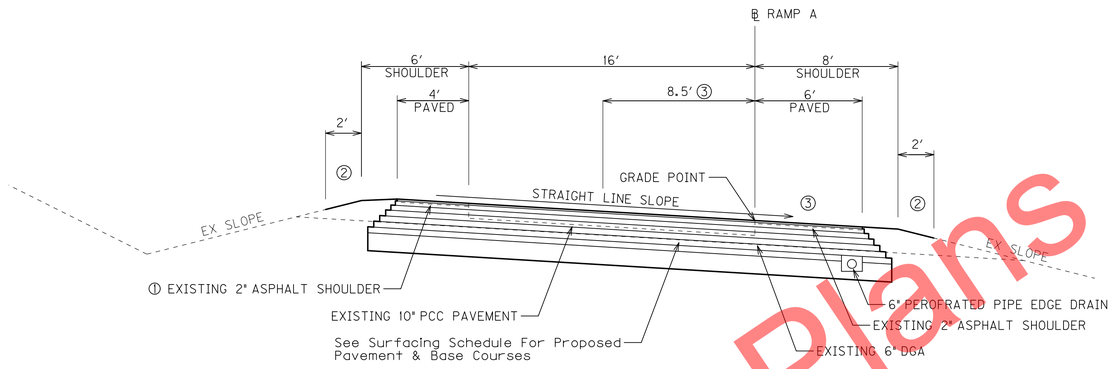

KY 8 RAMP A
STA 5+87 TO STA 14+89.56

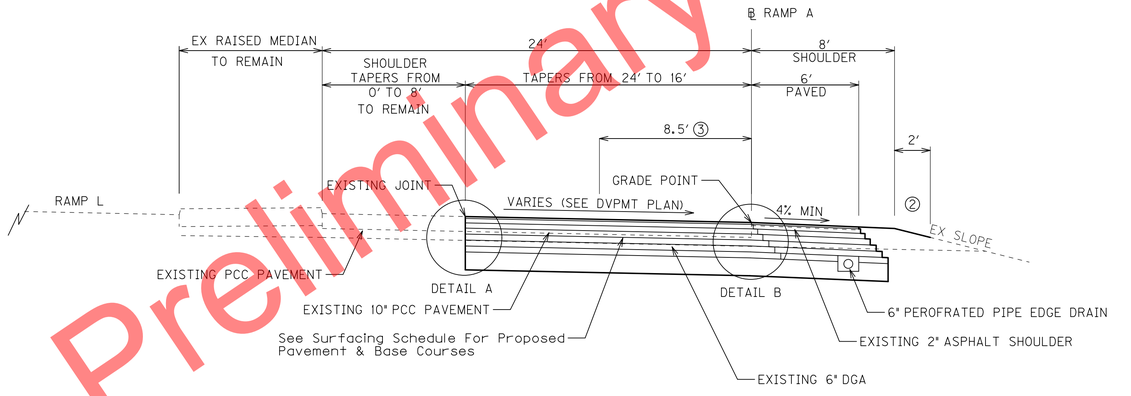

KY 8 RAMP A
STA 2+14 TO STA 5+87

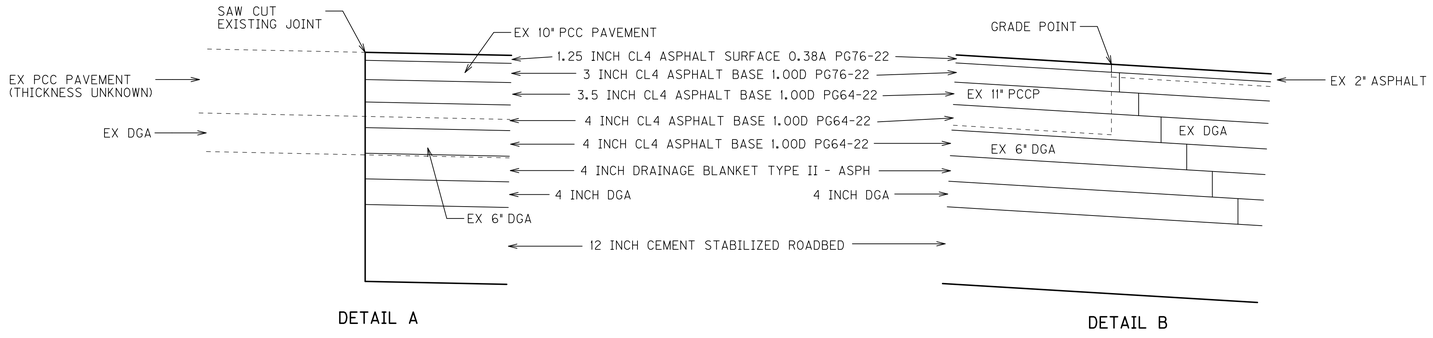

① THE EXISTING OUTSIDE SHOULDER IS CONCRETE FROM STA 5+87 TO STA 7+30 AND TAPERS FROM 8′ TO 4′ PAVED .

② ASPHALT SEAL COAT REQUIRED FROM THE OUTSIDE EDGE OF THE PAVED SHOULDER TO A POINT TWO FEET DOWN THE DITCH OR FILL SLOPE OR TO THE OUTER EDGE OF THE DGA, WHICHEVER IS LESS. 2 APPLICATIONS, SEE SHEET R2x

③ SHOULDER CONSTRUCTED TO NORMAL SUPERELEVATION EXCEPT NOT FLATTER THAN STANDARD SHOULDER FOR NORMAL SLOPES.

NOTE
SEE SHEET R2x FOR SURFACING SCHEDULE

TYPICAL SECTIONS

Preliminary Plans

FILE NAME: P:\CIVIL\147\N6-2021.00\CONTRACT PLANS AND PROPOSAL\CONTRACT PLAN SET\ROADWAY\R002AATS.DGN
USER: tvonbehren
DATE PLOTTED: January 2, 2012
E-SHEET NAME:
MicroStation v8.11.7.443

COUNTY OF	ITEM NO.	SHEET NO.
CAMPBELL	6-2021.00	R2ab

I–471 RAMP TYPICAL SECTIONS – NO ALTERNATE

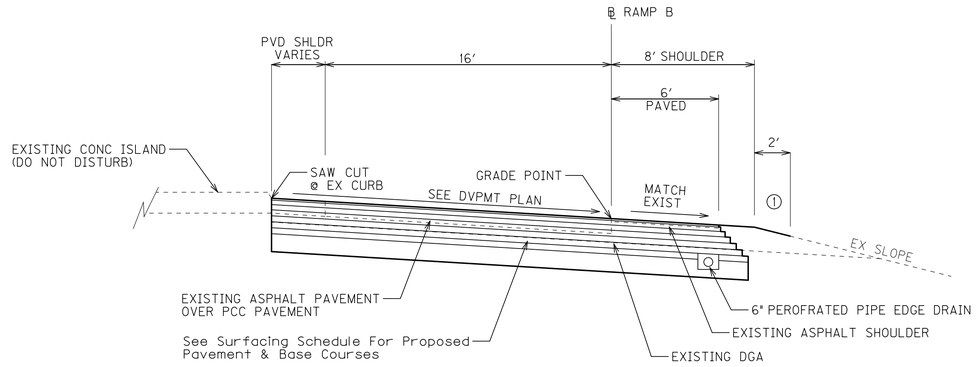

KY 8 RAMP B
STA 11+99 TO STA 12+93.09

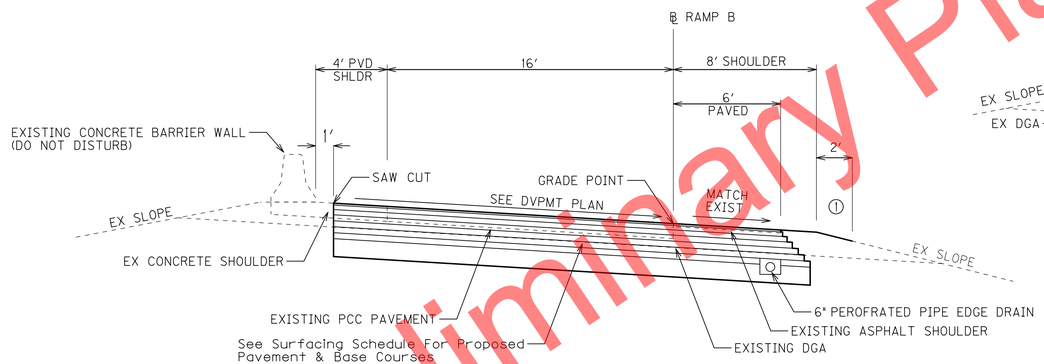

KY 8 RAMP B
STA 7+56 TO STA 11+99

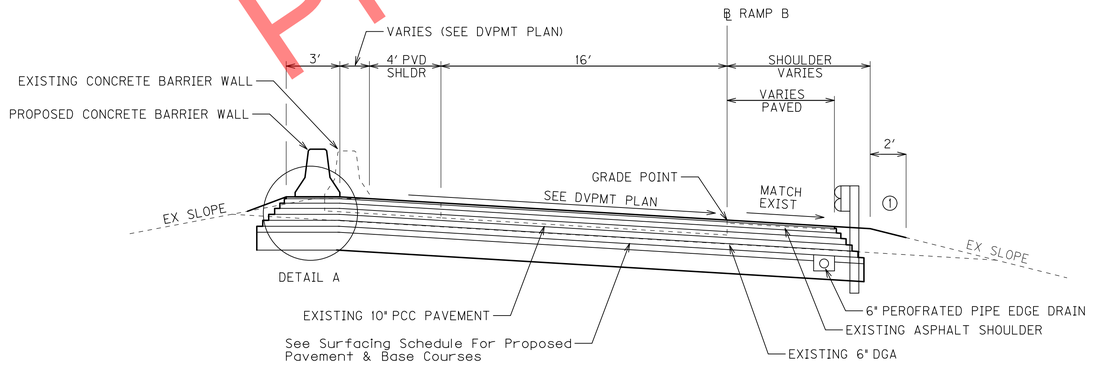

KY 8 RAMP B
STA 5+36.7 TO STA 6+78

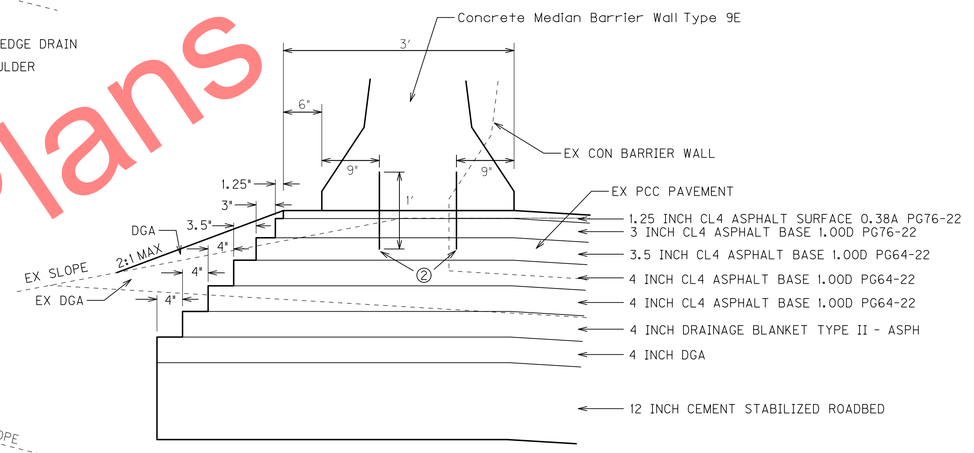

DETAIL A

① ASPHALT SEAL COAT REQUIRED FROM THE OUTSIDE EDGE OF THE PAVED SHOULDER TO A POINT TWO FEET DOWN THE DITCH OR FILL SLOPE OR TO THE OUTER EDGE OF THE DGA, WHICHEVER IS LESS. 2 APPLICATIONS, SEE SHEET R2x

② NO. 8 DOWEL BARS SPACED 4' O.C. AND STAGGERED 2'. SEE STD DWG RBM-001-09

NOTE
SEE SHEET R2x FOR SURFACING SCHEDULE

TYPICAL SECTIONS

Preliminary Plans

FILE NAME: P:\CIVIL\147\N6-2021.00\CONTRACT PLANS AND PROPOSAL\CONTRACT PLAN SET\ROADWAY\R0024BTS.DGN
USER: tvonbehren
DATE PLOTTED: January 2, 2012
E-SHEET NAME:
MicroStation v8.11.7.443

COUNTY OF	ITEM NO.	SHEET NO.
CAMPBELL	6-2021.00	R2ac

I–275 WB WIDENING TYPICAL SECTIONS – NO ALTERNATE

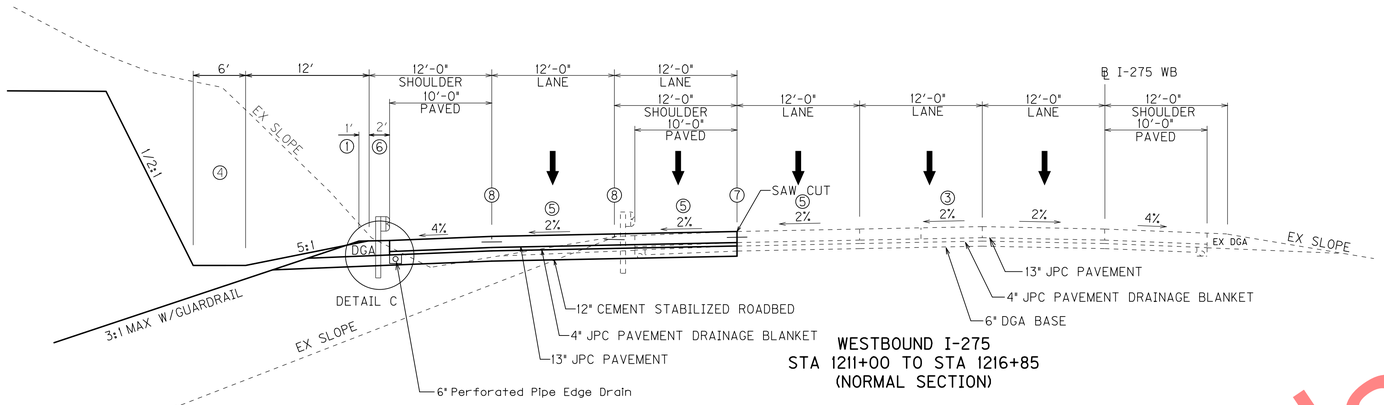

WESTBOUND I-275
STA 1211+00 TO STA 1216+85
(NORMAL SECTION)

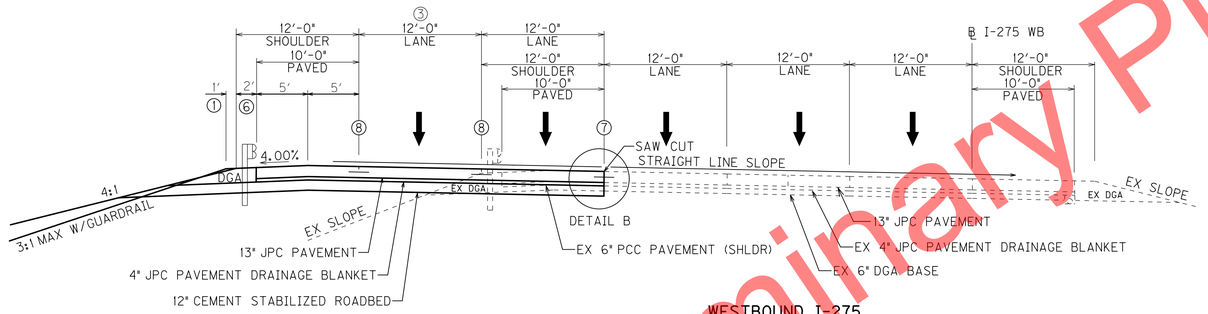

WESTBOUND I-275
STA 1203+28.21 TO STA 1211+00

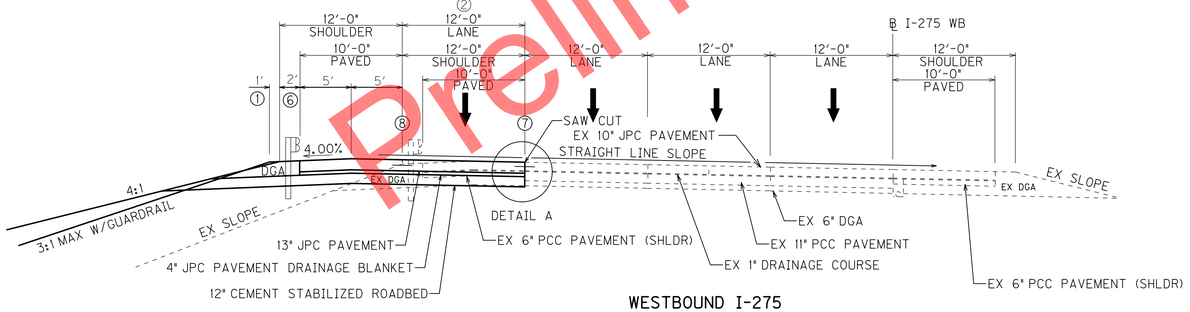

WESTBOUND I-275
STA 1197+60 TO STA 1203+28.21

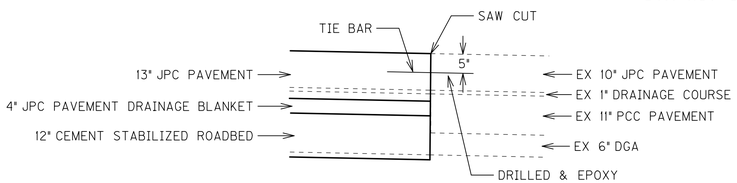

DETAIL A

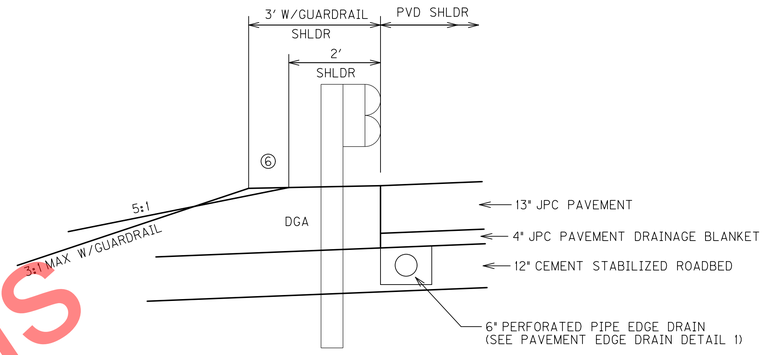

DETAIL C

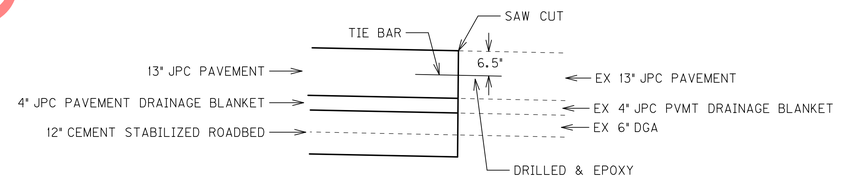

DETAIL B

SURFACING SCHEDULE

NEW CONSTRUCTION USING RIGID PAVEMENT

FULL DEPTH JPC PAVEMENT REPLACEMENT

I-275 WB WIDENING

DRIVING LANES

APPROXIMATELY 16" BASE ····· 12 INCH CEMENT STABILIZED ROADBED
4 INCH JPC PAVEMENT DRAINAGE BLANKET

APPROXIMATELY 13" SURFACE ····· JPC PAVEMENT-13 INCH

SHOULDERS

APPROXIMATELY 16" BASE ····· 12 INCH CEMENT STABILIZED ROADBED
4 INCH JPC PAVEMENT DRAINAGE BLANKET

APPROXIMATELY 13" SURFACE ····· JPC PAVEMENT-13 INCH SHLD

⑥ ASPHALT SEAL COAT (2 APPLICATIONS) ····· 2.40 LBS/SQ YD ASPHALT SEAL COAT
20 LBS/SQ YD ASPHALT SEAL AGGREGATE (Size No. 8 or 9M)

① 3' DGA SHOULDER WHEN USING GUARDRAIL
② TAPERS FROM 0' TO 12' FROM STA 1197+60 TO STA 1200+60
③ TAPERS FROM 0' TO 12' FROM STA 1208+00 TO STA 1211+00
④ SEE CROSS SECTIONS FOR DETAILS OUTSIDE OF SHOULDER
⑤ SEE DEVELOPMENT PLAN FOR PAVEMENT SLOPES IN TRANSITION AREAS
⑥ ASPHALT SEAL COAT REQUIRED FROM THE OUTSIDE EDGE OF THE PAVED SHOULDER TO A POINT TWO FEET DOWN THE DITCH OR FILL SLOPE OR TO THE LIMITS OF THE DGA, WHICHEVER IS LESS.
⑦ LONGITUDINAL SAWED CONSTRUCTION JOINT
⑧ OPTIONAL TYPE JOINT

TYPICAL SECTIONS

Preliminary Plans

FILE NAME: P:\CIVIL\147\N6-2021.00\CONTRACT PLANS AND PROPOSAL\CONTRACT PLAN SET\ROADWAY\R002ACTS.DGN
USER: tvonbehren
DATE PLOTTED: January 2, 2012
E-SHEET NAME:
MicroStation v8.11.7.443

GENERAL SUMMARY

COUNTY OF	ITEM NO.	SHEET NO.
CAMPBELL	6-2021.00	R2ad

ITEM	DESCRIPTION	UNIT	I-471	I-275 WB	I-275 RAMP A	US 27 RAMP A	US 27 RAMP B	US 27 RAMP C	US 27 RAMP D	GRAND AVENUE RAMP E	GRAND AVENUE RAMP EE	GRAND AVENUE RAMP F	GRAND AVENUE RAMP H	GRAND AVENUE RAMP K	MEMORIAL PARKWAY RAMP A	MEMORIAL PARKWAY RAMP D	MEMORIAL PARKWAY RAMP M	MEMORIAL PARKWAY RAMP N	KY 8 RAMP A	KY 8 RAMP B	KY 8 RAMP K	KY 8 RAMP L	MAINT. OF TRAFFIC	PROJECT TOTAL
71	CRUSHED AGGREGATE SIZE NO. 57 (9)	TON	1541																					1541
1015	INSPECT & CERTIFY EDGE DRAIN SYSTEM	LP SUM																						1
1982	DELINEATOR FOR GUARDRAIL-WHITE	EACH	488	26			4	8	20	12		9	17	12	8	4		16		4	4			632
1983	DELINEATOR FOR GUARDRAIL-YELLOW	EACH					2			17					3	5	14							41
1984	DELINEATOR FOR BARRIER-WHITE (7)	EACH	209	3						5										2		24	3205	3448
1985	DELINEATOR FOR BARRIER-YELLOW (7)	EACH	980							5										4		24	3205	4218
2003	RELOCATE TEMPORARY CONCRETE MEDIAN BARRIER	LIN FT																					93240	93240
2014	BARRICADE-TYPE III	EACH																					25	25 (8)
2237	DITCHING	LIN FT																						20000
2265	REMOVE FENCE	LIN FT																		166				166
2274	FENCE-6 FT CHAIN LINK	LIN FT																		166				166
2483	CHANNEL LINING CLASS II	TON																						1041 (2)
2484	CHANNEL LINING CLASS III	TON			120																			120
2555	CONCRETE - CLASS B (1)	CU YD		183																				183
2562	SIGNS	SQ FT																					4400	4400 (8)
2568	MOBILIZATION	LP SUM																						1
2569	DEMOBILIZATION	LP SUM																						1
2650	MAINTAIN AND CONTROL TRAFFIC	LP SUM																					1	1 (8)
2653	LANE CLOSURE	EACH																					26	26 (8)
2671	PORTABLE CHANGEABLE MESSAGE SIGN	EACH																					25	25 (8)
2720	SIDEWALK-4 IN CONCRETE	SQ YD									9	20								11				40
2726	STAKING	LP SUM																						1
2775	ARROW PANEL	EACH																					26	26 (8)
2894	CRASH CUSHION TYPE VI-T	EACH																					21	21
2898	RELOCATE CRASH CUSHION	EACH																					20	20
3148	CONCRETE MEDIAN BARRIER TY 9E	LIN FT	811																	99				910
3171	CONCRETE BARRIER WALL TYPE 9T	LIN FT																					64100	64100
5950	EROSION CONTROL BLANKET (6)	SQ YD	68283	5025	11613	1803	1582	1081	1386	3333	496	2506	728	2018	1299	986	891	689	878	733	111	111		127552 (3)
5966	TOPDRESSING FERTILIZER	TON																						8
5985	SEEDING AND PROTECTION (5)	SQ YD		11600																				11600
5989	SPECIAL SEEDING CROWN VETCH (4)	SQ YD		4540	9800																			14340

Preliminary Plans

NOTES:

SEE THE PROPOSAL FOR BID ITEMS AND QUANTITIES FOR THE FOLLOWING WORK:

BRIDGE REHABILITATION WORK
TRAFFIC LOOP INSTALLATION
TRAFFIC SIGNAL LOOP INSTALLATION

SEE SHEET T1 FOR QUANTITIES OF PERMANENT SIGNING BID ITEMS

(1) FOR GRAVITY RETAINING WALLS - SEE SHEETS R100 AND R135

(2) 41 TONS CARRIED FORWARD FROM THE PIPE DRAINAGE SUMMARY
1000 TON INCLUDED FOR REPAIR OF DITCHES AND IS TO BE USED AS DIRECTED BY THE ENGINEER

(3) 22000 SY FOR USE IN CONJUNCTION WITH THE DITCHING BID ITEM

(4) TO BE PLACED ON CUT SLOPES 2:1 OR STEEPER

(5) FOR THE 3:1 AND 2.75:1 FILL SLOPES ON I-275 WB

(6) ESTIMATED FOR 10' WIDE DISTURBED AREA FOR SHOULDERS ON I-471 AND 5' WIDE FOR RAMP SHOULDERS ALSO FOR PLACING ON CUT SLOPES 2:1 OR STEEPER ON I-275 RAMP A AND I-275 WB

(7) INSTALL ON EXISTING BARRIERS PRIOR TO BEGINNING PHASE 1 (QUANTITY BASED ON 50' SPACING)

(8) INCLUDES QUANTITIES FOR MAINTENANCE OF TRAFFIC WORK IN OHIO

(9) FOR BACKFILLING BEHIND CONCRETE MEDIAN BARRIER TYPE 9B2 OR TYPE 9E2 THROUGH I-471 SB WIDENING AREA (BASED ON ESTIMATE OF 901 CY AT 1.71 TONS PER CY)

GENERAL SUMMARY

FILE NAME: P:\CIVIL\147IN6-2021.00\CONTRACT PLANS AND PROPOSAL\CONTRACT PLAN SET\ROADWAY\R002ADSU.DGN
USER: tvonbehren
DATE PLOTTED: January 2, 2012
E-SHEET NAME:
MicroStation v8.11.7.443

GENERAL SUMMARY

COUNTY OF	ITEM NO.	SHEET NO.
CAMPBELL	6-2021.00	R2ae

ITEM	DESCRIPTION	UNIT	I-471	I-275 WB	I-275 RAMP A	US 27 RAMP A	US 27 RAMP B	US 27 RAMP C	US 27 RAMP D	GRAND AVENUE RAMP E	GRAND AVENUE RAMP EE	GRAND AVENUE RAMP F	GRAND AVENUE RAMP H	GRAND AVENUE RAMP K	MEMORIAL PARKWAY RAMP A	MEMORIAL PARKWAY RAMP D	MEMORIAL PARKWAY RAMP M	MEMORIAL PARKWAY RAMP N	KY 8 RAMP A	KY 8 RAMP B	KY 8 RAMP K	KY 8 RAMP L	MAINT. OF TRAFFIC	PROJECT TOTAL
6417	FLEXIBLE DELINEATOR POST-W	EACH	233	9	30	16	14	10	12	30	4	23	7	18	12	9	8	6	8	7	12	12		480
6418	FLEXIBLE DELINEATOR POST-Y	EACH			30	16	14	10	12	30	4	23	7	18	12	9	8	6	8	7	12	12		238
6511	PAVE STRIPING-TEMP PAINT-6 IN	LIN FT																					380000	380000 ⑦
6513	PAVE STRIPING-TEMP PAINT-12 IN	LIN FT																					16400	16400 ⑦
6549	PAVE STRIPING-TEMP REM TAPE-B	LIN FT																						25000 ⑦
6550	PAVE STRIPING-TEMP REM TAPE-W	LIN FT																						25000 ⑦
6551	PAVE STRIPING-TEMP REM TAPE-Y	LIN FT																						25000 ⑦
6568	PAVEMENT MARKING-THERMO STOP BAR-12 IN	EACH				27		43		18	15		20			18		15				35		191
6573	PAVEMENT MARKING-THERMO STRAIGHT ARROW	EACH						1			1													2
6574	PAVEMENT MARKING-THERMO CURVE ARROW	EACH				4		4														12		20
6576	PAVEMENT MARKING-THERMO ONLY	EACH				2		2														3		7
6585	PAVEMENT MARKER TY IVA-MW TEMP	EACH																					4352	4352 ⑦
6586	PAVEMENT MARKER TY IVA-MY TEMP	EACH																					8632	8632 ⑦
6592	PAVEMENT MARKER TYPE V-B W/R	EACH	1753	62	28	3		12				21												1879
6593	PAVEMENT MARKER TYPE V-B Y/R	EACH	30		37	45	36	25	31	71	12	60	19	46	32	23	21	19	27	19	35	63		651
8001	STRUCTURE EXCAVATION - COMMON ①	CU YD		318																				318
8100	CONCRETE - CLASS A	CU YD																						4.66 ④
8150	STEEL REINFORCEMENT	LB																						178 ⑤
20410ED	MAINTAIN LIGHTING	LP SUM																						1
21935EN	REMOVE CONCRETE MEDIAN BARRIER	LIN FT	2365																	151				2516
23143ED	K.P.D.E.S. PERMIT AND TEMPORARY EROSION CONTROL ②	LP SUM																						1
23237EN10W	WATERBLAST STRIPE REMOVAL	LIN FT																					385000	385000 ⑦
23864EC	CHANNEL LINING CLASS III-MOD ⑥	TON		225																				365 ③
24189ER	DURABLE WATERBORNE MARKING-6 IN W	LIN FT	93322	3188	2780	2105	2300	1631	1830	3621	120	4065	1200	2250	2310	1340	1560	1275	1400	800	1600	3330		132027
24190ER	DURABLE WATERBORNE MARKING-6 IN Y	LIN FT	61293		1475	1800	1450	1000	1241	2856	475	2400	750	1850	1260	930	840	740	1090	760	1400	2500		86110
24191ER	DURABLE WATERBORNE MARKING-12 IN W	LIN FT	21195	1000																			1600 ⑧	23795
24458EC	UTILITY LINE HANGER FOR BRIDGES ②	EACH		2																				2

① FOR GRAVITY RETAINING WALLS - SEE SHEETS R100 AND R135
② SEE SPECIAL NOTE IN THE PROPOSAL
③ 140 TONS CARRIED FORWARD FROM THE GUARDRAIL SUMMARY
④ 2.98 CU YD CARRIED FORWARD FROM THE GUARDRAIL SUMMARY, 1.68 CU YD CARRIED FORWARD FROM THE PIPE DRAINAGE SUMMARY
⑤ 163 LBS CARRIED FORWARD FROM THE GUARDRAIL SUMMARY, 15 LBS CARRIED FORWARD FROM THE PIPE DRAINAGE SUMMARY
⑥ SEE SHEET R136 FOR DETAIL DRAWING
⑦ INCLUDES QUANTITIES FOR MAINTENANCE OF TRAFFIC WORK IN OHIO
⑧ FOR CROSS-HATCHING REPLACEMENT IN RAMP GORE AREAS IN OHIO

Preliminary Plans

GENERAL SUMMARY

FILE NAME: P:\CIVIL\147N6-2021.00\CONTRACT PLANS AND PROPOSAL\CONTRACT PLAN SET\ROADWAY\R002AESU.DGN
USER: tvonbehren
DATE PLOTTED: January 2, 2012
E-SHEET NAME:
MicroStation v8.11.7.443

COUNTY OF	ITEM NO.	SHEET NO.
CAMPBELL	6-2021.00	R2af

PAVEMENT SUMMARY – NO ALTERNATE

I-471 STA 282+96.77 TO OHIO RIVER BRIDGE & I-275 WB

PAVEMENT AREAS

ITEM	I-471 NB	I-471 SB	KY 8 RAMP A	KY 8 RAMP B	KY 8 RAMP K	I-275 WB	TOTAL PROJECT
	SQUARE YARDS						
13" JPC PAVEMENT						3906	3906
13" JPC PAVEMENT - SHOULDER						2431	2431
4" JPC PAVEMENT DRAINAGE BLANKET						6337	6337
1.25" CL4 ASPH SURF 0.38A PG76-22 (1)	622	626					1248
1.25" CL4 ASPH SURF 0.38A PG76-22	9002	9913	3049	1593	122		23679
3" CL4 ASPH BASE 1.00D PG76-22	9019	9898	3067	1601	122		23707
3.5" CL4 ASPH BASE 1.00D PG64-22	9029	9969	3119	1621	125		23863
4" CL4 ASPH BASE 1.00D PG64-22	9101	10016	3175	1642	128		24062
4" CL4 ASPH BASE 1.00D PG64-22	9151	10069	3240	1666	131		24257
4" DRAINAGE BLANKET TYPE II - ASPH	9202	10122	3305	1690	134		24453
5 LBS/SQYD SAND FOR BLOTTER	9202	10122	3305	1690	134		24453
1.6 LBS/SQYD ASPHALT CURING SEAL	9202	10122	3305	1690	134		24453
4" DGA BASE	9254	10176	3372	1714	137		24653
5 LBS/SQYD SAND FOR BLOTTER	9254	10176	3372	1714	137	6337	30990
2 LBS/SQYD ASPHALT CURING SEAL	9254	10176	3372	1714	137	6337	30990
58.7 LBS/SQYD CEMENT	9254	10176	3372	1714	137	6337	30990
12" CEMENT STABILIZED ROADBED (2)	9254	10176	3372	1714	137	6337	30990
ASPHALT SEAL COAT	605	642	777	282	18	934	3258
ASPHALT SEAL AGGREGATE	605	642	777	282	18	934	3258
4" DGA BASE (3)	908	809	1162	365	28		3272
REMOVE PAVEMENT (4)	429	33	882	721			2065
REMOVE PCC PAVEMENT (5)	8573	9366	2167	828	122	3123	24179
7.75" ROADWAY EXCAVATION	8825	10143	2490	993	137		22588
DGA (6)		65				760	825
BACKFILLING UNDERCUT (7)	328	538		485			1351
FABRIC - GEOTEXTILE TYPE III (7)	344	565		509			1418

PAVEMENT QUANTITIES

ITEM CODE	ITEM	UNIT	I-471 NB	I-471 SB	KY 8 RAMP A	KY 8 RAMP B	KY 8 RAMP K	KY 8 RAMP L	I-275 WB	TOTAL PROJECT
1	DGA BASE (9)	TON	2337	2661	1043	478	38	72 (8)	1573	8202
8	CEMENT STABILIZED ROADBED	SQYD	9254	10176	3372	1714	137		6337	30990
18	DRAINAGE BLANKET TYPE II - ASPH (10)	TON	1840	2024	661	338	27			4890
22	JPC PAVEMENT DRAINAGE BLANKET (10)	TON							1267	1267
100	ASPHALT SEAL AGGREGATE (11)	TON	12.1	12.8	15.5	5.6	0.4		18.7	65.1
103	ASPHALT SEAL COAT (12)	TON	1.5	1.5	1.9	0.7	0.1		2.2	7.9
217	CL4 ASPH BASE 1.00D PG64-22 (13)	TON	5754	6338	2012	1040	81			15225
219	CL4 ASPH BASE 1.00D PG76-22 (13)	TON	1488	1633	506	264	20			3911
342	CL4 ASPH SURF 0.38A PG76-22 (13)	TON	640	703	210	110	8			1671
358	ASPHALT CURING SEAL	TON	16.6	18.3	6.0	3.1	0.2		6.3	50.5
2058	REMOVE PCC PAVEMENT	SQYD	8573	9366	2167	828	122	205 (8)	3123	24384
2071	JPC PAVEMENT - 11 IN	SQYD						205 (8)		205
2086	JPC PAVEMENT - 13 IN	SQYD							3906	3906
2087	JPC PAVEMENT - 13 IN SHLD	SQYD							2431	2431
2091	REMOVE PAVEMENT	SQYD	429	33	882	721				2065
2115	SAW-CLEAN-RESEAL TVRSE JOINT	LF			251		2550	3344		6145
2116	SAW-CLEAN-RESEAL LONGIT JOINT	LF			260		3038	2626		5924
2200	ROADWAY EXCAVATION (14)	CUYD	1900	2424	536	214	29		55350	60453
2235	BACKFILLING UNDERCUT	CUYD	109	179		162				450
2542	CEMENT	TON	272	299	99	50	4			724
2598	FABRIC - GEOTEXTILE TYPE III	SQYD	344	565		509				1418
2696	SHOULDER RUMBLE STRIPS - SAWED	LF	2088	2240						4328
2702	SAND FOR BLOTTER	TON	46	51	17	9	1		16	140

(1) TEMPORARY PAVEMENT INSTALLATION TO MAINTAIN POSITIVE DRAINAGE. SEE TYPICAL SECTIONS (AVG. DEPTH: 1.25"/2). REMOVAL INCIDENTAL TO THE PAVEMENT ITEM.

(2) USE CAUTION IN AREAS AROUND CROSS DRAINS. A PORTION OF THE PIPE MAY BE IN AREA TO BE CEMENT TREATED.

(3) FOR DRESSING THE EXISTING SHOULDERS, QUANTITY BASED ON A 6 FOOT WIDTH. USE ONLY AS DIRECTED BY THE ENGINEER.

(4) REMOVE ASPHALT SHOULDERS ON MAINLINE AND RAMPS. SUBGRADE EXCAVATION REQUIRED TO CONSTRUCT PROPOSED PAVEMENT SHALL BE INCIDENTAL TO THIS BID ITEM.

(5) SAW CUTTING SHALL BE INCIDENTAL TO THIS BID ITEM.

(6) THIS ITEM REPORTED IN CUBIC YARDS. (DEPTH VARIES, 2.07 TONS PER CU. YD.)

(7) QUANTITIES ARE BASED ON A 50 FOOT LONGITUDINAL LENGTH FROM THE END OF ALL BRIDGES. SEE SPECIAL NOTE 2E ROADBED STABILIZATION AT BRIDGE ENDS. USE ONLY AS DIRECTED BY THE ENGINEER.

(8) SEE THE PCC PAVEMENT REPAIR SUMMARY ON THE MISCELLANEOUS PAVEMENT SUMMARY.

(9) ESTIMATED AT 115 LBS. PER SQ. YD. PER INCH OF DEPTH.

(10) ESTIMATED AT 100 LBS. PER SQ. YD. PER INCH OF DEPTH.

(11) ESTIMATED AT 20 LBS. PER SQ. YD. PER APPLICATION (2 REQUIRED).

(12) ESTIMATED AT 2.40 LBS. PER SQ. YD. PER APPLICATION (2 REQUIRED).

(13) ESTIMATED AT 110 LBS. PER SQ. YD. PER INCH OF DEPTH.

(14) WITH AN ADDITIONAL 240 AND 55350 CUBIC YARDS FROM THE I-471 SB AND I-275 WB CROSS SECTIONS RESPECTIVELY.

Preliminary Plans

PAVEMENT SUMMARY - NO ALTERNATE

FILE NAME: P:\CIVIL\147N6-2021.00\CONTRACT PLANS AND PROPOSAL\CONTRACT PLAN SET\ROADWAY\R002AFSU.DGN
USER: tvonbehren
DATE PLOTTED: January 2, 2012
E-SHEET NAME:
MicroStation v8.11.7.443

COUNTY OF	ITEM NO.	SHEET NO.
CAMPBELL	6-2021.00	R2ag

PAVEMENT SUMMARY – JPC ALTERNATE

I-471 BEGIN PROJECT TO STA 261+30.61

PAVEMENT AREAS

ITEM		I-471 NB	I-471 SB	I-275 RAMP A	US 27 RAMP A	US 27 RAMP B	US 27 RAMP C	US 27 RAMP D	GRAND AVENUE RAMP E	GRAND AVENUE RAMP EE	GRAND AVENUE RAMP F	GRAND AVENUE RAMP H	GRAND AVENUE RAMP K	MEMORIAL PARKWAY RAMP A	MEMORIAL PARKWAY RAMP D	MEMORIAL PARKWAY RAMP M	MEMORIAL PARKWAY RAMP N			TOTAL PROJECT
		SQUARE YARDS																		
11" JPC PAVEMENT					4650	2967	3366	2938	5069	1327	7232	1590	3588	2889	1856	1885	1633			40990
11" JPC PAVEMENT - SHOULDER					1870	1608	1094	1465	3165	1002	2701	771	2296	1426	971	906	702			19977
13" JPC PAVEMENT		107127	112572	3930																223629
13" JPC PAVEMENT - SHOULDER	(1)	47662	46951	2250																96863
4" JPC PAVEMENT DRAINAGE BLANKET		37232	38994	6180																82406
4" CRUSHED STONE BASE	(1)	117557	120529		6595	4607	4460	4452	8234	2329	10030	2392	5901	4374	2827	2819	2383			299489
5 LBS/SQYD SAND FOR BLOTTER	(1)	154789	159523	6180	6595	4607	4460	4452	8234	2329	10030	2392	5901	4374	2827	2819	2383			381895
2 LBS/SQYD ASPHALT CURING SEAL	(1)	154789	159523	6180	6595	4607	4460	4452	8234	2329	10030	2392	5901	4374	2827	2819	2383			381895
58.7 LBS/SQYD CEMENT	(1)	154789	159523	6180	6595	4607	4460	4452	8234	2329	10030	2392	5901	4374	2827	2819	2383			381895
12" CEMENT STABILIZED ROADBED	(1)(2)	154789	159523	6180	6595	4607	4460	4452	8234	2329	10030	2392	5901	4374	2827	2819	2383			381895
ASPHALT SEAL COAT		10533	12036	1302	1478	1278	861	1145	2215	725	1930	609	942	1120	775	715	563			38227
ASPHALT SEAL AGGREGATE		10533	12036	1302	1478	1278	861	1145	2215	725	1930	609	942	1120	775	715	563			38227
4" DGA BASE	(3)	19403	16704		2206	1909	1373	1710	3307	1084	2891	905	1404	1672	1157	1066	839			57630
4" CL3 ASPH BASE 1.00D PG64-22	(4)	1522	3534																	5056
4" CL3 ASPH BASE 1.00D PG64-22	(4)	1522	3534																	5056
4" CRUSHED STONE BASE	(4)		2220																	2220
5" CRUSHED STONE BASE	(4)	1522	1314																	2836
FABRIC - GEOTEXTILE TYPE IV	(4)	2028	1750																	3778
REMOVE PAVEMENT	(5)				279	157	103	257	771	44	418	150	102							2281
REMOVE PCC PAVEMENT	(6)	154789	157052	4223	6241	4418	4357	4146	7463	2533	9515	2211	5782	4317	2827	2791	2335			375000
DGA	(7)		358	1036																1394
REMOVE TRAFFIC ISLAND							31								34					65
REMOVE PAVEMENT	(8)				641	142		260			779	141	53	471		123	353			2963
2" CL3 ASPH SURF 0.38D PG64-22					641	142		260			779	141	53	471		123	353			2963
13" CRUSHED STONE BASE					86	38		56			75	36	21	73		33	59			477
BACKFILLING UNDERCUT	(9)	2831	2877						303											6011
FABRIC - GEOTEXTILE TYPE III	(9)	2973	3021						318											6312

Preliminary Plans

(1) WITH AN ADDITIONAL 93 AND 85 SQUARE YARDS FOR THE I-471 NB AND SB INSIDE SHOULDER RESPECTIVELY. SEE THE MISCELLANEOUS PAVEMENT SUMMARY.

(2) USE CAUTION IN AREAS AROUND CROSS DRAINS. A PORTION OF THE PIPE MAY BE IN AREA TO BE CEMENT TREATED.

(3) FOR DRESSING THE EXISTING SHOULDERS, BASED ON A 6 FOOT WIDTH. USE ONLY AS DIRECTED BY THE ENGINEER.

(4) TEMPORARY PAVEMENT FOR MAINTENANCE OF TRAFFIC PURPOSES. SEE MOT PLANS.

(5) REMOVE ASPHALT SHOULDERS ON MAINLINE AND RAMPS. SUBGRADE EXCAVATION REQUIRED TO CONSTRUCT PROPOSED PAVEMENT SHALL BE INCIDENTAL TO THIS BID ITEM.

(6) SAW CUTTING SHALL BE INCIDENTAL TO THIS BID ITEM.

(7) THIS ITEM REPORTED IN CUBIC YARDS. (DEPTH VARIES, 2.07 TONS PER CU. YD.)

(8) FOR REMOVAL OF ASPHALT SURFACE ON TRAFFIC ISLANDS. EXCAVATION REQUIRED TO RECONSTRUCT TRAFFIC ISLAND SHALL BE INCIDENTAL TO THIS BID ITEM.

(9) QUANTITIES ARE BASED ON A 50 FOOT LONGITUDINAL LENGTH FROM THE END OF BRIDGE. SEE SPECIAL NOTE 2E ROADBED STABILIZATION AT BRIDGE ENDS. USE ONLY AS DIRECTED BY THE ENGINEER.

PAVEMENT SUMMARY - JPC ALTERNATE

FILE NAME: P:\CIVIL\147IV6-2021.00\CONTRACT PLANS AND PROPOSAL\CONTRACT PLAN SET\ROADWAY\R002AGSU.DGN
USER: tvonbehren
DATE PLOTTED: January 2, 2012
E-SHEET NAME:
MicroStation v8.11.7.443

COUNTY OF	ITEM NO.	SHEET NO.
CAMPBELL	6-2021.00	R2ah

PAVEMENT SUMMARY – JPC ALTERNATE

I-471 BEGIN PROJECT TO STA 261+30.61

PAVEMENT QUANTITIES

ITEM CODE	ITEM	UNIT	I-471 NB	I-471 SB	I-275 RAMP A	US 27 RAMP A	US 27 RAMP B	US 27 RAMP C	US 27 RAMP D	GRAND AVENUE RAMP E	GRAND AVENUE RAMP EE	GRAND AVENUE RAMP F	GRAND AVENUE RAMP H	GRAND AVENUE RAMP K	MEMORIAL PARKWAY RAMP A	MEMORIAL PARKWAY RAMP D	MEMORIAL PARKWAY RAMP M	MEMORIAL PARKWAY RAMP N		TOTAL PROJECT
1	DGA BASE (1)	TON	4463	4583	2145	507	439	316	393	761	249	665	208	323	385	266	245	193		16141
3	CRUSHED STONE BASE (1)	TON	27476	28610		1581	1088	1026	1066	1894	536	2363	577	1373	1061	650	673	592		71158
8	CEMENT STABILIZED ROADBED	SQYD	154789	159523	6180	6595	4607	4460	4452	8234	2329	10030	2392	5901	4374	2827	2819	2383		381895
22	JPC PAVEMENT DRAINAGE BLANKET (2)	TON	7446	7799	1236															16481
100	ASPHALT SEAL AGGREGATE (3)	TON	210.7	240.7	26.0	29.6	25.6	17.2	22.9	44.3	14.5	38.6	12.2	18.8	22.4	15.5	14.3	11.3		764.6
103	ASPHALT SEAL COAT (4)	TON	25.3	28.9	3.1	3.5	3.1	2.1	2.7	5.3	1.7	4.6	1.5	2.3	2.7	1.9	1.7	1.4		91.8
214	CL3 ASPH BASE 1.00D PG64-22 (5)	TON	670	1555																2225
339	CL3 ASPH SURF 0.38D PG64-22 (5)	TON				71	16		28			83	16	6	52		14	39		325
358	ASPHALT CURING SEAL	TON	154.8	159.5	6.2	6.6	4.6	4.5	4.5	8.2	2.3	10.0	2.4	5.9	4.4	2.8	2.8	2.4		381.9
1845	ISLAND INTEGRAL CURB	LF				395	180		265			360	172	105	341		159	277		2254
2058	REMOVE PCC PAVEMENT	SQYD	154789	157052	4223	6241	4418	4357	4146	7463	2533	9515	2211	5782	4317	2827	2791	2335		375000
2071	JPC PAVEMENT - 11 IN	SQYD				4650	2967	3366	2938	5069	1327	7232	1590	3588	2889	1856	1885	1633		40990
2072	JPC PAVEMENT - 11 IN SHLD	SQYD				1870	1608	1094	1465	3165	1002	2701	771	2296	1426	971	906	702		19977
2086	JPC PAVEMENT - 13 IN	SQYD	107127	112572	3930															223629
2087	JPC PAVEMENT - 13 IN SHLD	SQYD	47662	46951	2250															96863
2091	REMOVE PAVEMENT	SQYD				920	299	103	517	771	44	1197	291	155	471		123	353		5244
2200	ROADWAY EXCAVATION (6)	CUYD		3721	19585															23306
2235	BACKFILLING UNDERCUT	CUYD	944	959						101										2004
2542	CEMENT	TON	4543	4682	181	194	135	131	131	242	68	294	70	173	128	83	83	70		11208
2598	FABRIC - GEOTEXTILE TYPE III	SQYD	2873	3021						318										6312
2599	FABRIC - GEOTEXTILE TYPE IV	SQYD	2028	1750																3778
2695	RUMBLE STRIPS TYPE 3	LF	4264	4446																8710
2702	SAND FOR BLOTTER	TON	387	399	15	16	12	11	11	21	6	25	6	15	11	7	7	6		955
10203ND	PAVEMENT ADJUSTMENT (CONCRETE)	LS																		1
20997ED	REMOVE TRAFFIC ISLAND	SQYD						31								34				65
23335EC	CONCRETE MEDIAN BARRIER TY 9B2	LF		1493																1493

Preliminary Plans

(1) ESTIMATED AT 115 LBS. PER SQ. YD. PER INCH OF DEPTH

(2) ESTIMATED AT 100 LBS. PER SQ. YD. PER INCH OF DEPTH.

(3) ESTIMATED AT 20 LBS. PER SQ. YD. PER APPLICATION (2 REQUIRED).

(4) ESTIMATED AT 2.40 LBS. PER SQ. YD. PER APPLICATION (2 REQUIRED).

(5) ESTIMATED AT 110 LBS. PER SQ. YD. PER INCH OF DEPTH.

(6) SEE THE CROSS SECTIONS.

EARTHWORK
JPC ALTERNATE

15,132 CU YD EMB
9,100 CU YD EMB BENCH
43,386 CU YD ROCK EXC
31,193 CU YD COM
80 CU YD SURF DIT

Earthwork calculations are for design purposes and shown for information only. Assumptions for shrinkage and swell factors are the contractor's responsibility.

PAVEMENT SUMMARY - JPC ALTERNATE

MicroStation v8.11.7.443
E-SHEET NAME:
USER: tvonbehren
DATE PLOTTED: January 2, 2012
FILE NAME: P:\CIVIL\147IN6-2021.00\CONTRACT PLANS AND PROPOSAL\CONTRACT PLAN SET\ROADWAY\R002AHSU.DGN

COUNTY OF	ITEM NO.	SHEET NO.
CAMPBELL	6-2021.00	R2ai

PAVEMENT SUMMARY – ASPHALT ALTERNATE

I-471 BEGIN PROJECT TO STA 261+30.61

PAVEMENT AREAS

ITEM		I-471 NB	I-471 SB	I-275 RAMP A	US 27 RAMP A	US 27 RAMP B	US 27 RAMP C	US 27 RAMP D	GRAND AVENUE RAMP E	GRAND AVENUE RAMP EE	GRAND AVENUE RAMP F	GRAND AVENUE RAMP H	GRAND AVENUE RAMP K	MEMORIAL PARKWAY RAMP A	MEMORIAL PARKWAY RAMP D	MEMORIAL PARKWAY RAMP M	MEMORIAL PARKWAY RAMP N		TOTAL PROJECT
		SQUARE YARDS																	
1.25" CL4 ASPH SURF 0.38A PG76-22	(1)	8163	7323																15486
1.25" CL4 ASPH SURF 0.38A PG76-22		107127	112572	3930	4650	2967	3366	2938	5069	1575	7232	1590	3588	2889	1856	1885	1633		264867
3" CL4 ASPH BASE 1.00D PG76-22		107705	113140	3964	4689	3001	3389	2969	5140	1586	7286	1606	3631	2918	1877	1905	1647		266453
3.5" CL4 ASPH BASE 1.00D PG64-22		109020	114454	4046	4782	3081	3443	3041	5306	1613	7421	1645	3734	2988	1926	1950	1683		270133
4" CL4 ASPH BASE 1.00D PG64-22		110553	115970	4141															230664
4" CL4 ASPH BASE 1.00D PG64-22		112305	117703	4250	4891	3174	3507	3125	5507	1645	7578	1690	3855	3071	1983	2002	1724		278010
1.25" CL3 ASPH SURF 0.38D PG64-22	(2)	47662	46951	2250	1870	1608	1094	1465	3165	1002	2701	771	2296	1428	971	906	702		116842
3" CL3 ASPH BASE 1.00D PG64-22	(2)	47417	46770	2243	1870	1609	1094	1464	3157	1005	2702	771	2278	1429	971	907	702		116389
3.5" CL3 ASPH BASE 1.00D PG64-22	(2)	46932	46298	2243	1870	1609	1093	1464	3146	1004	2701	770	2238	1429	971	906	701		115374
4" CL3 ASPH BASE 1.00D PG64-22	(2)	46366	45750	2243															94395
4" CL3 ASPH BASE 1.00D PG64-22	(2)	22161	33890	1247	1869	1608	1093	1463	3124	1003	2701	770	2190	1428	970	906	701		77124
4" DRAINAGE BLANKET-TYPE II -ASPH		23569	22424	996															46989
4" DRAINAGE BLANKET-TYPE II -ASPH	(2)	157113	163975	6603	6883	4888	4671	4684	8852	2683	10457	2511	6129	4590	3019	2968	2472		392498
5 LBS/SQYD SAND FOR BLOTTER	(2)	157113	163975	6603	6883	4888	4671	4684	8852	2683	10457	2511	6129	4590	3019	2968	2472		392498
1.6 LBS/SQYD ASPHALT CURING SEAL	(2)	157113	163975	6603	6883	4888	4671	4684	8852	2683	10457	2511	6129	4590	3019	2968	2472		392498
4" DGA BASE	(2)	160275	165035	6712	7081	5026	4743	4829	9603	2718	10733	2591	6231	4743	3084	2851	2772		399027
5 LBS/SQYD SAND FOR BLOTTER	(2)	160275	165035	6712	7081	5026	4743	4829	9603	2718	10733	2591	6231	4743	3084	2851	2772		399027
2 LBS/SQYD ASPHALT CURING SEAL	(2)	160275	165035	6712	7081	5026	4743	4829	9603	2718	10733	2591	6231	4743	3084	2851	2772		399027
58.7 LBS/SQYD CEMENT	(2)	160275	165035	6712	7081	5026	4743	4829	9603	2718	10733	2591	6231	4743	3084	2851	2772		399027
12" CEMENT STABILIZED ROADBED	(2)(3)	160275	165035	6712	7081	5026	4743	4829	9603	2718	10733	2591	6231	4743	3084	2851	2772		399027
ASPHALT SEAL COAT		10533	12036	1302	1478	1278	861	1145	2215	725	1930	609	942	1120	775	715	563		38227
ASPHALT SEAL AGGREGATE		10533	12036	1302	1478	1278	861	1145	2215	725	1930	609	942	1120	775	715	563		38227
4" DGA BASE	(4)	19403	16704		2206	2198	1373	1710	3307	1084	2891	905	1404	1672	1157	1066	839		57630
4" CL3 ASPH BASE 1.00D PG64-22	(5)	1522	3534																5056
4" CL3 ASPH BASE 1.00D PG64-22	(5)	1370	3403																4773
12" DGA BASE	(5)	926	799																1725
4" CRUSHED STONE BASE	(5)		2220																2220
FABRIC - GEOTEXTILE TYPE IV	(5)	2334	2015																4349
REMOVE PAVEMENT	(6)				279	157	103	257	771	44	418	150	102						2281
REMOVE PCC PAVEMENT	(7)	154789	157052	4223	6241	4418	4357	4146	7463	2533	9515	2211	5782	4317	2827	2791	2335		375000
6.75" ROADWAY EXCAVATION		160275	159245	4223	6802	4869	4640	4572	8832	2674	10315	2441	6129	4743	3084	2851	2772		388467
DGA	(8)		358	1036															1394
REMOVE TRAFFIC ISLAND							31								34				65
REMOVE PAVEMENT	(9)				641	142		260			779	141	53	471		123	353		2963
2" CL3 ASPH SURF 0.38D PG64-22					641	142		260			779	141	53	471		123	353		2963
17.75" CRUSHED STONE BASE					86	38		56			75	36	21	73		33	59		477
BACKFILLING UNDERCUT	(10)	2914	3009						332										6255
FABRIC - GEOTEXTILE TYPE III	(10)	3060	3159						349										6568

Preliminary Plans

(1) TEMPORARY PAVEMENT INSTALLATION TO MAINTAIN POSITIVE DRAINAGE. SEE TYPICAL SECTIONS (AVG. DEPTH: 1.25"/2). REMOVAL INCIDENTAL TO THE PAVEMENT ITEM.

(2) WITH AN ADDITIONAL 93 AND 85 SQUARE YARDS FOR THE I-471 NB AND SB INSIDE SHOULDER RESPECTIVELY. SEE THE MISCELLANEOUS PAVEMENT SUMMARY.

(3) USE CAUTION IN AREAS AROUND CROSS DRAINS. A PORTION OF THE PIPE MAY BE IN AREA TO BE CEMENT TREATED.

(4) FOR DRESSING THE EXISTING SHOULDERS, QUANTITY BASED ON A 6 FOOT WIDTH. USE ONLY AS DIRECTED BY THE ENGINEER.

(5) TEMPORARY PAVEMENT FOR MAINTENANCE OF TRAFFIC PURPOSES. SEE MOT PLANS.

(6) REMOVE ASPHALT SHOULDERS ON MAINLINE AND RAMPS. SUBGRADE EXCAVATION REQUIRED TO CONSTRUCT PROPOSED PAVEMENT SHALL BE INCIDENTAL TO THIS BID ITEM.

(7) SAW CUTTING SHALL BE INCIDENTAL TO THIS BID ITEM.

(8) THIS ITEM REPORTED IN CUBIC YARDS. (DEPTH VARIES, 2.07 TONS PER CU. YD.)

(9) FOR REMOVAL OF ASPHALT SURFACE ON TRAFFIC ISLANDS. EXCAVATION REQUIRED TO RECONSTRUCT TRAFFIC ISLAND SHALL BE INCIDENTAL TO THIS BID ITEM.

(10) QUANTITIES ARE BASED ON A 50 FOOT LONGITUDINAL LENGTH FROM THE END OF BRIDGES. SEE SPECIAL NOTE 2E ROADBED STABILIZATION AT BRIDGE ENDS. USE ONLY AS DIRECTED BY THE ENGINEER.

PAVEMENT SUMMARY-ASPHALT ALTERNATE

FILE NAME: P:\CIVIL\471N6-2021.00\CONTRACT PLANS AND PROPOSAL\CONTRACT PLAN SET\ROADWAY\R0024ISU.DGN
USER: tvonbehren
DATE PLOTTED: January 2, 2012
E-SHEET NAME:
MicroStation v8.11.7.443

COUNTY OF	ITEM NO.	SHEET NO.
CAMPBELL	6-2021.00	R2aj

PAVEMENT SUMMARY – ASPHALT ALTERNATE

I-471 BEGIN PROJECT TO STA 261+30.61

PAVEMENT QUANTITIES

ITEM CODE	ITEM	UNIT	I-471 NB	I-471 SB	I-275 RAMP A	US 27 RAMP A	US 27 RAMP B	US 27 RAMP C	US 27 RAMP D	GRAND AVENUE RAMP E	GRAND AVENUE RAMP EE	GRAND AVENUE RAMP F	GRAND AVENUE RAMP H	GRAND AVENUE RAMP K	MEMORIAL PARKWAY RAMP A	MEMORIAL PARKWAY RAMP D	MEMORIAL PARKWAY RAMP M	MEMORIAL PARKWAY RAMP N		TOTAL PROJECT
1	DGA BASE (1)	TON	41965	43092	3688	2136	1662	1407	1504	2969	874	3134	804	1756	1475	975	901	831		109179
3	CRUSHED STONE BASE (1)	TON		511		88	39		57			77	37	21	75		34	60		999
8	CEMENT STABILIZED ROADBED	SQYD	160275	165035	6712	7081	5026	4743	4829	9603	2718	10733	2591	6231	4743	3084	2851	2772		399027
18	DRAINAGE BLANKET - TYPE II - ASPH (2)	TON	36155	37280	1520	1377	978	934	937	1770	537	2091	502	1226	918	604	594	494		87917
100	ASPHALT SEAL AGGREGATE (3)	TON	210.7	240.7	26.0	29.6	25.6	17.2	22.9	44.3	14.5	38.6	12.2	18.8	22.4	15.5	14.3	11.3		764.6
103	ASPHALT SEAL COAT (4)	TON	25.3	28.9	3.1	3.5	3.1	2.1	2.7	5.3	1.7	4.6	1.5	2.3	2.7	1.9	1.7	1.4		91.8
214	CL3 ASPH BASE 1.00D PG64-22 (5)	TON	32570	35676	1570	1080	929	631	845	1814	580	1560	445	1288	825	561	523	405		81302
217	CL4 ASPH BASE 1.00D PG64-22 (5)	TON	70015	73440	2625	1997	1291	1434	1273	2233	672	3096	688	1567	1251	807	816	707		163912
219	CL4 ASPH BASE 1.00D PG76-22 (5)	TON	17771	18668	654	774	495	559	490	848	262	1202	265	599	481	310	314	272		43964
339	CL3 ASPH SURF 0.38D PG64-22 (5)	TON	3277	3228	155	199	112	75	129	218	69	271	69	164	150	67	76	87		8346
342	CL4 ASPH SURF 0.38A PG76-22 (5)	TON	8487	8746	270	320	204	231	202	348	108	497	109	247	199	128	130	112		20338
358	ASPHALT CURING SEAL	TON	286.0	296.2	12.0	12.6	8.9	8.5	8.6	16.7	4.9	19.1	4.6	11.1	8.4	5.5	5.2	4.7		713.0
1891	ISLAND HEADER CURB TYPE 2 (6)	LF				395	180		265			360	172	105	341		159	227		2254
2058	REMOVE PCC PAVEMENT	SQYD	154789	157052	4223	6241	4418	4357	4146	7463	2533	9515	2211	5782	4317	2827	2791	2335		375000
2091	REMOVE PAVEMENT	SQYD				920	299	103	517	771	44	1197	291	155	471		123	353		5244
2200	ROADWAY EXCAVATION (7)	CUYD	30052	33579	20377	1275	913	870	857	1656	501	1934	458	1149	889	578	535	520		96143
2235	BACKFILLING UNDERCUT	CUYD	971	1003						111										2085
2542	CEMENT	TON	4704	4844	197	208	148	139	139	282	80	315	76	183	139	91	84	81		11710
2598	FABRIC - GEOTEXTILE TYPE III	SQYD	3060	3159						349										6568
2599	FABRIC - GEOTEXTILE TYPE IV	SQYD	2334	2015																4349
2696	SHOULDER RUMBLE STRIPS - SAWED	LF	35661	37190																72851
2702	SAND FOR BLOTTER	TON	793	823	33	35	25	24	24	46	14	53	13	31	23	15	15	13		1980
10203ND	PAVEMENT ADJUSTMENT (ASPHALT)	LS																		1
20997ED	REMOVE TRAFFIC ISLAND	SQYD						31								34				65
24459EC	CONCRETE MEDIAN BARRIER TY 9E2	LF		1493																1493

Preliminary Plans

(1) ESTIMATED AT 115 LBS. PER SQ. YD. PER INCH OF DEPTH.

(2) ESTIMATED AT 100 LBS. PER SQ. YD. PER INCH OF DEPTH.

(3) ESTIMATED AT 20 LBS. PER SQ. YD. PER APPLICATION (2 REQUIRED).

(4) ESTIMATED AT 2.40 LBS. PER SQ. YD. PER APPLICATION (2 REQUIRED).

(5) ESTIMATED AT 110 LBS. PER SQ. YD. PER INCH OF DEPTH.

(6) FOR RECONSTRUCTION OF THE TRAFFIC ISLANDS.

(7) WITH AN ADDITIONAL 3721 AND 19585 CUBIC YARDS FROM THE I-471 SB AND I-275 RAMP A CROSS SECTIONS RESPECTIVELY.

EARTHWORK
ASPHALT ALTERNATE

15132 CU YD EMB
9100 CU YD EMB BENCH
43386 CU YD ROCK EXC
104030 CU YD COM
80 CU YD SURF DIT

Earthwork calculations are for design purposes and shown for information only. Assumptions for shrinkage and swell factors are the contractor's responsibility.

PAVEMENT SUMMARY-ASPHALT ALTERNATE

FILE NAME: P:\CIVIL\471\6-2021.00\CONTRACT PLANS AND PROPOSAL\CONTRACT PLAN SET\ROADWAY\R002AJSU.DGN
USER: tvonbehren
DATE PLOTTED: January 2, 2012
E-SHEET NAME:
MicroStation v8.11.7.443

COUNTY OF	ITEM NO.	SHEET NO.
CAMPBELL	6-2021.00	R2ak

FILE NAME: P:\CIVIL\147\N6-2021.00\CONTRACT PLANS AND PROPOSAL\CONTRACT PLAN SET\ROADWAY\R002AKSU.DGN
USER: tvanbehren
DATE PLOTTED: January 2, 2012
E-SHEET NAME:
MicroStation v8.11.7.443

ADDITIONAL PAVEMENT REQUIRED ALONG LONGITUDINAL CRACKS ON INSIDE SHOULDERS FROM US 27 TO GRAND AVENUE

(See Sheet R136 for Details)

I-471 NB INSIDE SHOULDERS

BEGIN STA	END STA	AREA (SY)
145+95.5	146+16.5	1.3
146+44.5	146+69.3	1.0
147+58.0	147+98.5	4.7
151+18.3	152+07.4	15.2
152+97.2	153+23.6	2.5
156+22.7	156+73.1	6.7
159+26.1	159+77.9	6.8
161+81.5	162+42.5	6.2
167+87.5	168+22.8	3.4
168+33.2	168+73.5	4.5
170+61.2	171+02.3	3.3
171+63.2	171+96.4	3.1
181+43.7	182+54.9	16.8
184+88.9	185+17.0	2.1
186+38.9	186+83.3	2.6
193+36.0	194+45.7	12.9
	TOTAL	93.0 ①

I-471 SB INSIDE SHOULDERS

BEGIN STA	END STA	AREA (SY)
145+91.5	146+72.3	7.7
146+89.2	147+05.1	0.7
149+16.6	149+35.1	1.0
150+56.8	151+04.9	5.9
154+09.4	154+26.2	0.8
154+93.6	155+92.6	11.1
156+25.0	156+83.3	3.5
156+96.4	157+21.3	0.7
158+26.6	158+56.1	2.4
158+98.5	159+14.7	0.7
162+89.6	163+48.7	8.8
177+40.3	178+03.7	5.5
185+86.6	186+15.8	1.0
186+43.4	186+88.1	5.4
193+88.7	194+42.6	3.2
195+30.8	195+65.7	2.5
197+21.0	197+63.7	5.0
202+63.4	203+59.8	11.0
204+47.5	205+04.7	8.2
	TOTAL	85.0 ①

① Quantities for These Areas Are Included in the Pavement Summary For Each Pavement Alternate

RANDOM CRACK REPAIR SUMMARY

LOCATION		WIDTH			ITEM NO. 21173EC
		LEFT SHOULDER	DRIVING LANE	RIGHT SHOULDER	SAW-CLEAN-RESEAL RANDOM CRACKS
RAMP	STA	LIN FT			LIN FT
KY 8 RAMP L	26+58.8	4.0	24.0	6.0	34.0
KY 8 RAMP K	10+26.2	6.0	*	*	6.0
KY 8 RAMP K	10+37.2	*	*	8.0	8.0
KY 8 RAMP K	12+97.7	6.0	*	*	6.0
KY 8 RAMP K	13+68.6	*	*	8.0	8.0
KY 8 RAMP K	13+89.2	*	*	8.0	8.0
KY 8 RAMP K	14+49.4	*	*	8.0	8.0
KY 8 RAMP K	15+10.5	*	*	8.0	8.0
KY 8 RAMP K	15+29.1	*	15.0	*	15.0
KY 8 RAMP K	15+58.4	*	*	8.0	8.0
KY 8 RAMP K	15+99.6	*	*	8.0	8.0
KY 8 RAMP K	16+40.7	*	*	8.0	8.0
KY 8 RAMP K	16+59.8	*	*	8.0	8.0
PROJECT TOTALS		16.0	39.0	78.4	133.0

* NO CRACK IN THIS PAVEMENT

PCC PAVEMENT REPAIR SUMMARY

LOCATION			LANE WIDTH			ITEM NO.		
	BEGIN	END	INSIDE SHOULDER	DRIVING LANE	OUTSIDE SHOULDER	AREA	6" DGA BASE	2071 JPC PAVEMENT-11 IN	2058 REMOVE PCC PAVEMENT
RAMP	STA	STA	FT			SQ FT	TON	SQ YD	
KY 8 RAMP L	22+88.0	23+37.6	*	15.0	*	744	29	83	83
KY 8 RAMP L	24+00.8	24+27.7	4.0	16.9	6.0	724	28	81	81
KY 8 RAMP L	24+63.6	24+70.4	4.0	*	*	27	1	3	3
KY 8 RAMP L	26+92.5	26+99.5	*	24.0	*	168	7	19	19
KY 8 RAMP L	28+47.3	28+53.3	*	24.0	*	144	6	16	16
KY 8 RAMP L	30+90.8	30+96.8	4.0	*	*	24	1	3	3
PROJECT TOTALS							72 ①	205 ①	205 ①

* DO NOT DISTURB THIS PAVEMENT

① The quantities from this summary have been carried forward to the No Alternate Pavement Summary.

② See the Special Note for Full Depth Concrete Pavement Repairs for details concerning this work.

REPAIR CURB SUMMARY
ALL WORK ON KY 8 RAMP K
KY 8 ENTRANCE RAMP TO I-471 SB

BID ITEM 3302 REPAIR CONCRETE CURB			
BEGIN STA	END STA	OFFSET DIR	LENGTH (LF)
8+35.4	8+36.0	RIGHT	1.5
8+38.2	8+39.3	RIGHT	3.5
8+44.3	8+45.7	LEFT	4.3
8+52.2	8+53.1	LEFT	2.8
8+97.5	9+00.4	LEFT	3.0
9+17.9	9+20.2	LEFT	2.5
9+33.6	9+35.0	LEFT	2.0
9+51.1	9+52.7	LEFT	2.7
10+72.3	10+73.9	LEFT	1.5
10+98.2	11+00.7	LEFT	2.5
11+15.5	11+17.5	LEFT	2.0
11+99.5	12+01.1	RIGHT	1.5
12+36.0	12+38.5	LEFT	2.5
12+53.2	12+55.7	LEFT	2.5
12+65.6	12+68.1	LEFT	2.5
12+78.4	12+81.4	LEFT	3.0
13+28.6	13+32.6	RIGHT	4.0
15+08.7	15+16.7	RIGHT	8.0
15+35.4	15+37.9	LEFT	2.5
15+50.5	15+52.5	LEFT	2.0
15+58.5	15+60.5	RIGHT	2.0
15+64.3	15+65.8	LEFT	1.5
16+09.7	16+12.2	LEFT	2.5
16+18.7	16+20.2	RIGHT	1.5
16+22.5	16+25.0	LEFT	2.5
16+51.5	16+54.0	LEFT	2.5
16+70.5	16+73.0	LEFT	2.5
16+84.8	16+88.8	RIGHT	4.0
16+96.5	16+98.5	LEFT	2.0
17+02.7	17+04.2	RIGHT	1.5
17+12.8	17+15.8	LEFT	3.0
17+31.1	17+34.1	LEFT	3.0
17+44.2	17+46.2	LEFT	2.0
17+64.8	17+67.3	RIGHT	2.5
18+26.0	18+27.6	RIGHT	1.6
18+44.4	18+46.0	RIGHT	1.6
		PROJECT TOTAL	93.0

This work includes removing damaged areas of existing curbs, providing and placement of all Class A concrete required to return the curb to its original shape and all other costs associated with repairing the curbs shown in the table above.

Preliminary Plans

MISCELLANEOUS PAVEMENT SUMMARY

GUARDRAIL SUMMARY

COUNTY OF	ITEM NO.	SHEET NO.
CAMPBELL	6-2021.00	R2aL

LOCATION & STATION	REMOVE GUARDRAIL ①	STEEL "W" BEAM		GUARDRAIL END TREATMENT TYPE			BRIDGE END CONNECTOR TYPE		CRASH CUSHION TYPE V1 CLASS C TL3	CHANNEL LINING CLASS III MOD	FLUME INLET TYPE ②		ISLAND HEADER CURB TYPE 2	ISLAND INTEGRAL CURB	ISLAND CURB & GUTTER	STEEL REINFORCMNT	CONCRETE CLASS A	TEMP GUARDRAIL ③	REMARKS
		SF			2A	3	4A	A	A-1			1	2						
	2381	21802EN			2369	2373	2391	2363	2387	8904	23864EC	1690	1691	1891	1845	1825	8150	8100	2397	
	LINEAR FEET			EACH							TON	EACH		LIN FT			LB	CU YD	LIN FT	
I-471 (SOUTH OF BIFURCATION)																				
RT STA 15+41 TO RT I-471 NB STA 40+05	2477.5																			
RT STA 15+41 TO RT I-471 NB STA 40+00		2437.5			1		1													
I-471 SOUTHBOUND																				
LT STA 22+97 TO STA 27+84	475																			
LT STA 23+00 TO STA 29+03					1		1												550	
LT STA 23+00 TO STA 29+03	587.5	550			1		1													
LT STA 42+48 TO STA 46+45	399	400			1	1														
LT STA 66+55 TO STA 70+14	360																			
LT STA 66+55 TO STA 70+05		312.5			1		1													
RT I-275 RAMP A STA 7+87 TO LT I-471 SB STA 83+61	1212.5	1212.5			1	1														
RT I-275 RAMP A STA 4+91 TO LT I-471 SB STA 75+96														102 ④	102 ④					
LT STA 76+18 TO STA 80+83														465 ④	465 ④					
LT STA 76+12											10		1							
LT STA 80+95											10		1							
I-471 NORTHBOUND																				
RT STA 65+00 TO STA 84+03		1862.5			1		1													
RT STA 65+60 TO STA 84+03	1839																			
RT STA 69+00 TO STA 72+77														377 ④	377 ④					
RT STA 72+93											10		1							
RT STA 72+99 TO STA 77+46														447 ④	447 ④					
RT STA 77+62											10		1							
RT STA 77+67 TO STA 81+81														413 ④	413 ④					
RT STA 81+99											10		1							
LT (OUTSIDE) I-471																				
STA 103+72 TO STA 124+54	2076																			
STA 103+72 TO STA 126+66		2287.5			1		1													
STA 106+49 TO STA 109+82														333 ④	333 ④					
STA 109+93											10		1							
STA 135+01 TO STA 140+27	525	525			1				1											
STA 143+87 TO STA 146+90	303.5																			
STA 143+87 TO STA 146+87		262.5					1	1												
STA 143+87 TO STA 144+12															25 ⑤	25 ⑤				
STA 164+26 TO RT GA RAMP F STA 26+39	4325	4325			1	1														
STA 215+84 TO STA 217+59	175	175			1				1											
STA 220+90 TO STA 224+92	402																			
STA 220+90 TO STA 224+90		362.5					1	1												
STA 221+00 TO STA 221+18															18 ⑤	18 ⑤				
STA 230+00 TO STA 232+12	215.8	215.8							1											
STA 234+34 TO RT MP RAMP A STA 20+00	969	969						1												
STA 229+09 TO STA 231+52														244 ④	244 ④					
STA 231+63 TO STA 232+16															52 ⑤	52 ⑤				
STA 234+44 TO STA 234+55															11 ⑤	11 ⑤				
STA 234+66 TO RT MP RAMP A STA 23+13														616 ④	616 ④					
STA 295+82.5										1							163	2.98		CONC MED BAR END
Sheet Totals (Using JPC Pavement Alternate)	16341.8	15897.3			11	3	8	3	3	1	60		6		3103		163	2.98	550	
Sheet Totals (Using Asphalt Pavement Alternate)	16341.8	15897.3			11	3	8	3	3	1	60		6	2997		106	163	2.98	550	

Preliminary Plans

① SALVAGE EXISTING MATERIAL AS PER SECTION 719.03.07, EXCEPT THAT THE CONTRACTOR SHALL DELIVER EXISTING SALVAGED GUARDRAIL SYSTEM MATERIALS TO THE CENTRAL SIGN SHOP AND RECYCLE CENTER (FORMERLY BAILEY BRIDGE YARD) AT 1224 WILKINSON BLVD. IN FRANKFORT, KENTUCKY. CONTACT SECTION SUPERVISOR AT (502) 564-8187 TO SCHEDULE THE DELIVERY OF MATERIAL. DELIVER THE MATERIAL BETWEEN THE HOURS OF 8:00 AM AND 3:00 PM MONDAY THROUGH FRIDAY. THE "GUARDRAIL DELIVERY VERIFICATION SHEET" MUST BE COMPLETED AT THE JOB SITE AND PROVIDED TO THE CENTRAL SIGN SHOP AND RECYCLE CENTER REPRESENTATIVE WHEN THE SALVAGED MATERIAL IS DELIVERED.

② INCLUDES REMOVING EXISTING FLUME

③ FOR MAINTENANCE OF TRAFFIC

④ USE ISLAND INTEGRAL CURB FOR JPC PAVEMENT ALTERNATE
USE ISLAND HEADER CURB TYPE 2 FOR ASPHALT PAVEMENT ALTERNATE

⑤ USE ISLAND INTEGRAL CURB FOR JPC PAVEMENT ALTERNATE
USE ISLAND CURB & GUTTER FOR ASPHALT PAVEMENT ALTERNATE

GUARDRAIL SUMMARY

FILE NAME: P:\CIVIL\147IN6-2021.00\CONTRACT PLANS AND PROPOSAL\CONTRACT PLAN SET\ROADWAY\R002ALSU.DGN
USER: tvonbehren
DATE PLOTTED: January 2, 2012
E-SHEET NAME:
MicroStation v8.11.7.443

GUARDRAIL SUMMARY

COUNTY OF	ITEM NO.	SHEET NO.
CAMPBELL	6-2021.00	R2am

LOCATION & STATION	REMOVE GUARDRAIL (1)	STEEL "W" BEAM		GUARDRAIL END TREATMENT TYPE				BRIDGE END CONNECTOR TYPE		CRASH CUSHION TYPE V1 CLASS C TL3	CHANNEL LINING CLASS III MOD	FLUME INLET TYPE (2)		ISLAND HEADER CURB TYPE 2	ISLAND INTEGRAL CURB	ISLAND CURB & GUTTER	STEEL REINFORCMNT	CONCRETE CLASS A	TEMP GUARDRAIL (3)	REMARKS
		SF			2A	3	4A	A	A-1			1	2							
	2381	21802EN			2369	2373	2391	2363	2387	8904	23864EC	1690	1691	1891	1845	1825	8150	8100	2397	
	LINEAR FEET			EACH							TON	EACH		LIN FT			LB	CU YD	LIN FT	
RT (OUTSIDE) I-471																				
STA 105+17 TO STA 113+98	875	875			1	1														
STA 107+50 TO STA 112+31														481 (4)	481 (4)					
STA 124+41 TO STA 127+66	325	325			1	1														
STA 112+54 TO STA 113+27														73 (4)	73 (4)					
STA 113+53 TO STA 113+68														15 (4)	15 (4)					
STA 112+43											10		1							
STA 113+40											10	1								
STA 134+89 TO STA 139+43	454	412.5					1	1												
STA 139+23 TO STA 139+31															8 (5)	8 (5)				
STA 143+01 TO STA 148+16	516																			
STA 143+01 TO STA 148+14		512.5			1				1											
STA 155+00 TO STA 172+38	1819.2																			
STA 155+00 TO STA 172+36		1817.2			1															
STA 183+98 TO RT GA RAMP E STA 15+08	1356																			
STA 183+40 TO RT GA RAMP E STA 15+08		1375					1													
STA 185+92 TO RT GA RAMP E STA 9+63														624 (4)	624 (4)					
STA 189+49											10		1							
STA 212+50 TO STA 216+26	378.9																			
STA 212+54 TO STA 216+26		337.5					1	1												
STA 215+89.9 TO STA 216+14.9															25 (5)	25 (5)				
STA 219+66 TO STA 220+44	78																			
STA 219+66 TO STA 220+41		75			1				1											
STA 219+77 TO STA 219+89															12 (5)	12 (5)				
STA 227+65 TO STA 231+95	437.2	437.5				1		1												
STA 234+14 TO RT MP RAMP D STA 17+00	1088.8	1088.8							1											
STA 230+07 TO STA 231+41														134 (4)	134 (4)					
STA 231+53 TO STA 231+84															31 (5)	31 (5)				
STA 234+25 TO STA 234+34															9 (5)	9 (5)				
STA 234+45 TO RT MP RAMP D STA 15+18														876 (4)	876 (4)					
STA 256+03 TO STA 261+28	525	487.5					1	1												
STA 260+95 TO STA 261+00															5 (5)	5 (5)				
STA 261+11 TO STA 261+18															7 (5)	7 (5)				
STA 282+99 TO STA 286+98	402																			
STA 282+99 TO STA 286+96		400			1				1											
STA 292+95 TO STA 296+82	374																			
STA 292+86 TO STA 296+88		350					1	1												
STA 294+06 TO STA 296+55														249						
STA 296+66 TO STA 296+77																11				
STA 293+88											10		1							
Sheet Totals (Using JPC Pavement Alternate)	8629.1	8493.5			6	3	5	5	4		40	1	3	249	2300	11				
Sheet Totals (Using Asphalt Pavement Alternate)	8629.1	8493.5			6	3	5	5	4		40	1	3	2452		108				

Preliminary Plans

(1) SALVAGE EXISTING MATERIAL AS PER SECTION 719.03.07, EXCEPT THAT THE CONTRACTOR SHALL DELIVER EXISTING SALVAGED GUARDRAIL SYSTEM MATERIALS TO THE CENTRAL SIGN SHOP AND RECYCLE CENTER (FORMERLY BAILEY BRIDGE YARD) AT 1224 WILKINSON BLVD. IN FRANKFORT, KENTUCKY. CONTACT SECTION SUPERVISOR AT (502) 564-8187 TO SCHEDULE THE DELIVERY OF MATERIAL. DELIVER THE MATERIAL BETWEEN THE HOURS OF 8:00 AM AND 3:00 PM MONDAY THROUGH FRIDAY. THE "GUARDRAIL DELIVERY VERIFICATION SHEET" MUST BE COMPLETED AT THE JOB SITE AND PROVIDED TO THE CENTRAL SIGN SHOP AND RECYCLE CENTER REPRESENTATIVE WHEN THE SALVAGED MATERIAL IS DELIVERED.

(2) INCLUDES REMOVING EXISTING FLUME

(3) FOR MAINTENANCE OF TRAFFIC

(4) USE ISLAND INTEGRAL CURB FOR JPC PAVEMENT ALTERNATE
USE ISLAND HEADER CURB TYPE 2 FOR ASPHALT PAVEMENT ALTERNATE

(5) USE ISLAND INTEGRAL CURB FOR JPC PAVEMENT ALTERNATE
USE ISLAND CURB & GUTTER FOR ASPHALT PAVEMENT ALTERNATE

GUARDRAIL SUMMARY

FILE NAME: P:\CIVIL\147IN6-2021.00\CONTRACT PLANS AND PROPOSAL\CONTRACT PLAN SET\ROADWAY\R002AMSU.DGN
USER: tvonbehren
DATE PLOTTED: January 2, 2012
E-SHEET NAME:
MicroStation v8.11.7.443

GUARDRAIL SUMMARY

COUNTY OF	ITEM NO.	SHEET NO.
CAMPBELL	6-2021.00	R2an

LOCATION & STATION	REMOVE GUARDRAIL ①	STEEL "W" BEAM		GUARDRAIL END TREATMENT TYPE				BRIDGE END CONNECTOR TYPE		CRASH CUSHION TYPE V1 CLASS C TL3	CHANNEL LINING CLASS III MOD	FLUME INLET TYPE ②		ISLAND HEADER CURB TYPE 2	ISLAND INTEGRAL CURB	ISLAND CURB & GUTTER	STEEL REINFORCMNT	CONCRETE CLASS A	TEMP GUARDRAIL ③	REMARKS
		SF			2A	3	4A	A	A-1			1	2							
	2381	21802EN			2369	2373	2391	2363	2387	8904	23864EC	1690	1691	1891	1845	1825	8150	8100	2397	
	LINEAR FEET			EACH							TON	EACH		LIN FT			LB	CU YD	LIN FT	
US 27 RAMP B																				
RT STA 24+01 TO RT (OUTSIDE) I-471 STA 155+00	232.5	195.3					1													
LT STA 10+91 TO STA 11+61	87.5	87.5			1															
US 27 RAMP C																				
RT STA 16+80 TO STA 20+39	375	375				1														
US 27 RAMP D																				
RT STA 10+07 TO STA 18+99	975	975			1															
GA RAMP E																				
RT STA 9+78											10		1							
LT STA 16+86 TO STA 25+14	800	762.5					1	1												
RT STA 22+79 TO STA 25+06	187.5	150					1	1												
LT STA 27+34 TO STA 28+34	100	100			1				1											
RT STA 27+24 TO STA 31+47	425	425			1				1											
GA RAMP F																				
RT STA 8+02 TO STA 11+90	350	312.5			1		1													
RT STA 11+99 TO STA 13+37	137.5	137.5			2															
RT STA 8+02 TO STA 11+90														350 ④	350 ④					
GA RAMP H																				
RT STA 8+96 TO STA 16+75	846.7	846.7			1															
GA RAMP K																				
LT STA 16+68 TO STA 23+30	612.5	575			1		1													
MP RAMP A																				
LT STA 13+07 TO STA 13+35	150	150			1															
RT STA 15+40 TO STA 20+00	456	418.5					1													
RT STA 15+84 TO STA 15+91														7 ④	7 ④					
RT STA 16+14 TO STA 22+90														676 ④	676 ④					
RT STA 15+96											10		1							
RT STA 22+95											10		1							
MP RAMP D																				
RT STA 17+00 TO STA 19+00	223.7	223.7																		
LT STA 16+41 TO STA 19+34	300	262.5					1													
RT STA 15+46 TO STA 18+41														295 ④	295 ④					
RT STA 15+32											10	1								
Sheet Totals (Using JPC Pavement Alternate)	6258.9	5996.7			10	1	7	2	2		40	1	3		1328					
Sheet Totals (Using Asphalt Pavement Alternate)	6258.9	5996.7			10	1	7	2	2		40	1	3	1328						

Preliminary Plans

① SALVAGE EXISTING MATERIAL AS PER SECTION 719.03.07, EXCEPT THAT THE CONTRACTOR SHALL DELIVER EXISTING SALVAGED GUARDRAIL SYSTEM MATERIALS TO THE CENTRAL SIGN SHOP AND RECYCLE CENTER (FORMERLY BAILEY BRIDGE YARD) AT 1224 WILKINSON BLVD. IN FRANKFORT, KENTUCKY. CONTACT SECTION SUPERVISOR AT (502) 564-8187 TO SCHEDULE THE DELIVERY OF MATERIAL. DELIVER THE MATERIAL BETWEEN THE HOURS OF 8:00 AM AND 3:00 PM MONDAY THROUGH FRIDAY. THE "GUARDRAIL DELIVERY VERIFICATION SHEET" MUST BE COMPLETED AT THE JOB SITE AND PROVIDED TO THE CENTRAL SIGN SHOP AND RECYCLE CENTER REPRESENTATIVE WHEN THE SALVAGED MATERIAL IS DELIVERED.

② INCLUDES REMOVING EXISTING FLUME

③ FOR MAINTENANCE OF TRAFFIC

④ USE ISLAND INTEGRAL CURB FOR JPC PAVEMENT ALTERNATE
USE ISLAND HEADER CURB TYPE 2 FOR ASPHALT PAVEMENT ALTERNATE

GUARDRAIL SUMMARY

FILE NAME: P:\CIVIL\147N6-2021.00\CONTRACT PLANS AND PROPOSAL\CONTRACT PLAN SET\ROADWAY\R002ANSU.DGN
USER: tvonbehren
DATE PLOTTED: January 2, 2012
E-SHEET NAME:
MicroStation v8.11.7.443

GUARDRAIL SUMMARY

COUNTY OF	ITEM NO.	SHEET NO.
CAMPBELL	6-2021.00	R2a0

LOCATION & STATION	REMOVE GUARDRAIL ①	STEEL "W" BEAM		GUARDRAIL END TREATMENT TYPE				BRIDGE END CONNECTOR TYPE		CRASH CUSHION TYPE V1 CLASS C TL3	CHANNEL LINING CLASS III MOD	FLUME INLET TYPE ②		ISLAND HEADER CURB TYPE 2	ISLAND INTEGRAL CURB	ISLAND CURB & GUTTER	STEEL REINFORCMNT	CONCRETE CLASS A	TEMP GUARDRAIL ③	REMARKS
		SF			2A	3	4A	A	A-1			1	2							
	2381	21802EN			2369	2373	2391	2363	2387	8904	23864EC	1690	1691	1891	1845	1825	8150	8100	2397	
	LINEAR FEET			EACH							TON	EACH		LIN FT			LB	CU YD	LIN FT	
MP RAMP M																				
LT STA 11+14 TO STA 13+12	237.5	237.5			1															
RT STA 8+65 TO STA 8+71															6 ④	6 ④				
RT STA 8+82 TO STA 8+87															5 ④	5 ④				
LT STA 12+06 TO STA 16+82	487.5	450					1													
MP RAMP N																				
RT STA 8+55 TO STA 15+76	812.5	812.5							1											
KY 8 RAMP K																				
RT STA 21+71 TO STA 23+91	220																			
RT STA 21+67 TO STA 23+91		187.5					1	1												
RT STA 23+73 TO STA 23+80																7				
KY 8 RAMP B																				
RT STA 4+85 TO STA 6+74	189																			
RT STA 4+86 TO STA 6+75		187.5						1	1											
RT STA 4+95 TO STA 5+13																18				
RT STA 5+15 TO STA 5+26																11				
RT STA 7+38 TO STA 8+95	150	150			1				1											
I-275 WB																				
LT STA 1200+00 TO STA 1208+81	898																			
LT STA 1200+03 TO STA 1208+81.2		912.5			1				1											
LT STA 1210+45.4 TO STA 1213+71.6	327																			
LT STA 1210+50 TO STA 1214+50		362.5					1	1												
LT STA 1210+46.9 TO STA 1210+71.9															25					
Sheet Totals (Using JPC Pavement Alternate)	3321.5	3300			3		3	3	4						36	36				
Sheet Totals (Using Asphalt Pavement Alternate)	3321.5	3300			3		3	3	4						25	47				
Project Totals (Using JPC Pavement Alternate)	34551.3	33687.5			30	7	23	13	13	1	140 ⑤	2	12	249	6767	47	163 ⑤	2.98 ⑤	550	
Project Totals (Using Asphalt Pavement Alternate)	34551.3	33687.5			30	7	23	13	13	1	140 ⑤	2	12	6777	25	261	163 ⑤	2.98 ⑤	550	

Preliminary Plans

① SALVAGE EXISTING MATERIAL AS PER SECTION 719.03.07, EXCEPT THAT THE CONTRACTOR SHALL DELIVER EXISTING SALVAGED GUARDRAIL SYSTEM MATERIALS TO THE CENTRAL SIGN SHOP AND RECYCLE CENTER (FORMERLY BAILEY BRIDGE YARD) AT 1224 WILKINSON BLVD. IN FRANKFORT, KENTUCKY. CONTACT SECTION SUPERVISOR AT (502) 564-8187 TO SCHEDULE THE DELIVERY OF MATERIAL. DELIVER THE MATERIAL BETWEEN THE HOURS OF 8:00 AM AND 3:00 PM MONDAY THROUGH FRIDAY. THE "GUARDRAIL DELIVERY VERIFICATION SHEET" MUST BE COMPLETED AT THE JOB SITE AND PROVIDED TO THE CENTRAL SIGN SHOP AND RECYCLE CENTER REPRESENTATIVE WHEN THE SALVAGED MATERIAL IS DELIVERED.

② INCLUDES REMOVING EXISTING FLUME

③ FOR MAINTENANCE OF TRAFFIC

④ USE ISLAND INTEGRAL CURB FOR JPC PAVEMENT ALTERNATE
USE ISLAND CURB & GUTTER FOR ASPHALT PAVEMENT ALTERNATE

⑤ QUANTITY CARRIED FORWARD TO THE GENERAL SUMMARY

GUARDRAIL SUMMARY

FILE NAME: P:\CIVIL\147IN6-2021.00\CONTRACT PLANS AND PROPOSAL\CONTRACT PLAN SET\ROADWAY\R002A0SU.DGN
USER: tvonbehren
DATE PLOTTED: January 2, 2012
E-SHEET NAME:
MicroStation v8.11.7.443

PERFORATED PIPE DRAINAGE SUMMARY

COUNTY OF	ITEM NO.	SHEET NO.
CAMPBELL	6-2021.00	R2ap

MILEPOST OR STATIONS	CRUSHED AGGREGATE SIZE NO 2	PERFORATED PIPE 6 INCH	PERFORATED PIPE 8 INCH	NON-PERFORATED PIPE 6 INCH	NON-PERFORATED PIPE 8 INCH	PERF PIPE HEADWALL TY 1-6 INCH ①	PERF PIPE HEADWALL TY 1-8 INCH ①	PERF PIPE HEADWALL TY 2-6 INCH ①	PERF PIPE HEADWALL TY 3-6 INCH ①	PERF PIPE HEADWALL TY 4-6 INCH ①	CORED HOLE DRAINAGE BOX CON-6 INCH	CORED HOLE DRAINAGE BOX CON-8 INCH	PERFORATED PIPE HEADWALL LOCATION	CORED HOLE DRAINAGE BOX LOCATION
ITEM CODE	78	1001	1002	1011	1012	1021	1022	1025	1029	1033	1741	1742		
UNIT TO BID ON	TON	LIN FT				EACH								
I-471 (SOUTH OF BIFURCATION)														
RT 15+30 - 21+98 (NB)		670		5							1			21+98 (NB)
LT 15+30 - 25+26 (SB)	1	975		8		1							25+26 (SB)	
TOTAL - I-471 (SOUTH	1	1645		13		1					1			
OF BIFURCATION)														
I-471 NORTHBOUND														
LT 21+98 - 32+00	1	1012		23						1			32+00	
LT 32+00 - 42+00	1	1000		23						1			42+00	
LT 42+00 - 49+89		787		27							1			49+89
LT 51+62 - 56+57		493		12							1			56+57
LT 56+57 - 61+48	1	490		23						1			61+48	
LT 61+48 - 66+49		501		20							1			66+49
LT 66+49 - 71+50	1	501		23						1			71+50	
LT 71+50 - 75+25		375		6							1			75+25
RT 24+89 - 35+00		1011		8		1							35+00	
RT 35+00 - 42+52	1	752		15					1				42+52	
RT 61+34 - 64+09	1	276		7							1			64+09
RT 68+83 - 74+00		517		8		1							74+00	
RT 74+00 - 84+00	1	1000		15					1				84+00	
RT 84+00-89+75 I-471	1	562		21							1			89+75
TOTAL - I-471 NB	8	9277		231		2			2	4	6			
I-471 SOUTHBOUND														
LT 25+26 - 34+92	1	950		23						1			34+92	
LT 34+92 - 44+34	1	942		8		1							44+34	
LT 47+12 - 52+40		528		22							1			52+40
LT 52+40 - 62+42		1002		25							1			62+42
LT 62+42 - 70+91		849		17							1			70+91
LT 70+91 - 73+02		211		4							1			73+02
LT 74+54 - 82+00	1	747		8		1							82+00	
LT 82+00-90+00 I-471	1	453		15					1				90+00	
RT 31+61 - 39+00	1	539		15					1				39+00	
RT 41+59 - 46+00		441		22							1			46+00
RT 46+00 - 52+06	1	606		23						1			52+06	
RT 52+06 - 60+00		793		21							1			60+00
RT 60+00 - 62+42		242		8							1			62+42
RT 63+66 - 67+40		374		29							1			67+40
RT 67+40 - 71+28		389		28							1			71+28
RT 71+28 - 80+33		900		20							1			80+33
RT 80+33-89+63 I-471		930		10							1			89+63
TOTAL - I-471 SB	6	10896		298		2			2	2	11			
LT (OUTSIDE) I-471														
90+00 - 103+56 ②	1		1631		16		1						103+56	
103+56 - 110+24	1	667		8		1							110+24	

MILEPOST OR STATIONS	CRUSHED AGGREGATE SIZE NO 2	PERFORATED PIPE 6 INCH	PERFORATED PIPE 8 INCH	NON-PERFORATED PIPE 6 INCH	NON-PERFORATED PIPE 8 INCH	PERF PIPE HEADWALL TY 1-6 INCH ①	PERF PIPE HEADWALL TY 1-8 INCH ①	PERF PIPE HEADWALL TY 2-6 INCH ①	PERF PIPE HEADWALL TY 3-6 INCH ①	PERF PIPE HEADWALL TY 4-6 INCH ①	CORED HOLE DRAINAGE BOX CON-6 INCH	CORED HOLE DRAINAGE BOX CON-8 INCH	PERFORATED PIPE HEADWALL LOCATION	CORED HOLE DRAINAGE BOX LOCATION
ITEM CODE	78	1001	1002	1011	1012	1021	1022	1025	1029	1033	1741	1742		
UNIT TO BID ON	TON	LIN FT				EACH								
LT (OUTSIDE) I-471 CONTINUED														
115+77 - 119+04 ②	1	334		8		1							115+77	
123+03 - 129+01 ②	1	610		8		1							123+03	
132+57 - 140+27	1	800 ③		15					1				132+57	
143+86 - 152+50	1	878 ③		15					1				144+12	
152+50 - 161+98	1	900		23						1			152+50	
161+98 - 170+00	1	762		15					1				161+98	
170+00 - 177+27	1	722		10				1					177+27	
199+47 - 209+47	1	1000		23						1			209+47	
209+47 - 217+68		869 ⑤		24							1			217+29
220+82 - 225+16	1	461 ③		23						1			225+16	
11+41 Ramp H - 231+62		458 ④		5							1			231+62
234+34 - 237+83	1	381 ④		8		1							237+83	
240+84 - 248+04	1	706		23						1			248+04	
248+04 - 254+02		584		22							1			254+02
254+02 - 256+80		277												254+02
256+80 - 259+86	1	305		23						1			256+80	
285+30 - 289+15	1	385		8		1							289+15	
TOTAL - LT (OUT) I-471	15	11099	1631	261	16	5	1	1	3	5	3			
LT (INSIDE) I-471														
89+65 - 94+46		480		5							1			94+46
94+48 - 99+38		492		5							1			99+38
99+45 - 103+07		600		5							1			103+07
103+07 - 107+01		395		5							1			107+01
107+01 - 111+51		450		5							1			111+51
111+51 - 113+59		200		5							1			113+59
113+59 - 116+99		350												113+59
116+99 - 123+01		605		5							1			116+99
123+01 - 129+00		601		5							1			123+01
129+00 - 135+49		650		5							1			129+00
135+49 - 139+94		471 ③		5							1			135+49
143+52 - 146+49		324 ③		5							1			144+00
146+49 - 157+00			1045		5							1		146+49
157+00 - 170+00			1295		5							1		157+00
170+00 - 178+00		800		5							1			178+00
178+00 - 182+00		401		5							1			182+00
182+00 - 185+99		400		5							1			185+99
185+99 - 190+51		454		5							1			190+51
190+51 - 194+00		351		5							1			194+00
194+00 - 198+50		451		5							1			198+50
198+50 - 203+00		449		5							1			203+00
203+00 - 209+99		700		5							1			209+99
209+99 - 213+66		366		5							1			213+66
213+66 - 216+63		297		5							1			216+63
220+33 - 228+99		892 ③		5							1			228+99
228+99 - 232+05		335 ④		5							1			231+70
234+37 - 241+25		729 ④		5							1			241+25
241+25 - 247+91		664		5							1			247+91

① FIELD VERIFY TYPE OF HEADWALL AND OBTAIN ENGINEER'S APPROVAL BEFORE INSTALLING
② 5' DEEP TRENCH - SEE EDGE DRAIN DETAIL AND ROADWAY TYPICAL SECTIONS
③ INCLUDES 27' FOR ROADBED STABILIZATION AT BRIDGE END
④ INCLUDES 31' FOR ROADBED STABILIZATION AT BRIDGE END
⑤ INCLUDES 54' FOR ROADBED STABILIZATION AT BRIDGE END

PERFORATED PIPE SUMMARY

Preliminary Plans

FILE NAME: P:\CIVIL\147\6-2021.00\CONTRACT PLANS AND PROPOSAL\CONTRACT PLAN SET\ROADWAY\R0024PSU.DGN
USER: tvonbehren
DATE PLOTTED: January 2, 2012
E-SHEET NAME:
MicroStation v8.11.7.443

PERFORATED PIPE DRAINAGE SUMMARY

COUNTY OF	ITEM NO.	SHEET NO.
CAMPBELL	6-2021.00	R2aq

MILEPOST OR STATIONS	CRUSHED AGGREGATE SIZE NO 2	PERFORATED PIPE 6 INCH	PERFORATED PIPE 8 INCH	NON-PERFORATED PIPE 6 INCH	NON-PERFORATED PIPE 8 INCH	PERF PIPE HEADWALL TY 1-6 INCH ①	PERF PIPE HEADWALL TY 1-8 INCH ①	PERF PIPE HEADWALL TY 2-6 INCH ①	PERF PIPE HEADWALL TY 3-6 INCH ①	PERF PIPE HEADWALL TY 4-6 INCH ①	CORED HOLE DRAINAGE BOX CON-6 INCH	CORED HOLE DRAINAGE BOX CON-8 INCH	PERFORATED PIPE HEADWALL LOCATION	CORED HOLE DRAINAGE BOX LOCATION
ITEM CODE	78	1001	1002	1011	1012	1021	1022	1025	1029	1033	1741	1742		
UNIT TO BID ON	TON	LIN FT				EACH								
LT (INSIDE) I-471 CONTINUED														
256+76 - 261+28		482 ②		5							1			256+76
283+02 - 289+84		683		5							1			289+84
289+84 - 290+04		20		5							1			290+04
290+04 - 296+98		418 ④												290+04
TOTAL - LT (IN) I-471		14510	2340	140	10						28	2		
RT (INSIDE) I-471														
95+00 - 103+15			1044		5							1		103+15
103+15 - 107+01		387		5							1			107+01
107+01 - 113+60		658		5							1			113+60
113+60 - 116+99		338												113+60
116+99 - 128+99			1196		5							1		116+99
128+99 - 135+49		650		5							1			128+99
135+49 - 139+77		455 ②		5							1			135+49
143+35 - 146+50		341 ②		5							1			144+01
146+50 - 150+99		451		5							1			146+50
150+99 - 157+00		606		5							1			150+99
157+00 - 161+99		503		5							1			157+00
161+99 - 170+00		810		5							1			161+99
170+00 - 178+00		800		5							1			178+00
178+00 - 185+99		795		5							1			185+99
185+99 - 194+00		798		5							1			194+00
194+00 - 198+50		449		5							1			198+50
198+50 - 203+00		450		5							1			203+00
203+00 - 210+00		700		5							1			210+00
210+00 - 213+67		367		5							1			213+67
213+67 - 216+94		382 ③		5							1			216+36
220+09 - 228+98		916 ②		5							1			228+98
228+98 - 232+02		335 ②		5							1			231+70
234+24 - 241+25		732 ②		5							1			241+25
241+25 - 244+62		337		5							1			244+62
244+62 - 247+90		339		5							1			247+90
247+90 - 252+80		491		5							1			252+80
252+80 - 254+92		213		5							1			254+92
254+92 - 257+01		209												254+92
257+01 - 261+28		456 ②		5							1			257+01
282+99 - 284+00		155 ③		5							1			283+28
TOTAL - RT (IN) I-471		14123	2240	130	10						26	2		
RT (OUTSIDE) I-471														
89+75 - 94+48		459		20							1			94+48
94+48 - 97+48		289		19							1			97+48
97+48 - 101+98		438		19							1			101+98
101+98 - 104+98		299		19							1			104+98
104+98 - 112+00	1	937		8		1							112+00	
112+00 - 113+67	1	164		15					1				113+67	
113+67 - 117+00		326											113+67	
117+00 - 122+00	1	488		23						1			117+00	
122+00 - 129+96	1	785		23						1			122+00	

MILEPOST OR STATIONS	CRUSHED AGGREGATE SIZE NO 2	PERFORATED PIPE 6 INCH	PERFORATED PIPE 8 INCH	NON-PERFORATED PIPE 6 INCH	NON-PERFORATED PIPE 8 INCH	PERF PIPE HEADWALL TY 1-6 INCH ①	PERF PIPE HEADWALL TY 1-8 INCH ①	PERF PIPE HEADWALL TY 2-6 INCH ①	PERF PIPE HEADWALL TY 3-6 INCH ①	PERF PIPE HEADWALL TY 4-6 INCH ①	CORED HOLE DRAINAGE BOX CON-6 INCH	CORED HOLE DRAINAGE BOX CON-8 INCH	PERFORATED PIPE HEADWALL LOCATION	CORED HOLE DRAINAGE BOX LOCATION
ITEM CODE	78	1001	1002	1011	1012	1021	1022	1025	1029	1033	1741	1742		
UNIT TO BID ON	TON	LIN FT				EACH								
RT (OUTSIDE) I-471 CONTINUED														
132+55 - 139+43	1	715 ②		34						1			132+55	
143+03 - 146+79	1	402 ②		8		1							143+41	
173+38 - 183+48	1	999		15					1				183+48	
183+48 - 193+63	1	988		8		1							193+63	
193+65 - 202+58		890		34							1			202+58
202+58 - 209+02	1	644		23						1			209+02	
219+61 - 222+20		287 ②		52							1			221+72
226+00 - 231+93		624 ②		5							1			231+51
234+16 - 238+00	1	417 ②		8		1							238+00	
238+65 - 241+64	1	299		23						1				241+64
256+89 - 261+28	1	468 ②		8		1							256+89	
286+08 - 288+71	1	263		23						1			288+71	
11+52 Ramp A-296+90		846 ③		13							1			11+52 Ramp A
TOTAL - RT (OUT) I-471	13	12027		400		5			2	6	8			
LT I-275 WESTBOUND														
1211+00 - 1216+85	1	580		8		1							1211+00	
RT I-275 RAMP A														
4+85 - 7+00		215												
7+00 - 21+00	1		1383		8	1							7+00	
21+00 - 23+90.66		285												
US 27 RAMP A														
10+00 - 18+00 Rt	1	798		15						1			18+00	
18+00 - 25+61 Rt	1	768		23							1		25+61	
23+80 - 26+47 Lt	1	267		15						1			26+47	
US 27 RAMP B														
10+99 - 16+00 Rt	1	505		15						1			10+99	
16+00 - 23+00 Rt	1	700		15						1			16+00	
11+15 - 12+48 Lt	1	135		8		1							11+15	
10+80 - 11+03 Lt		30		5							1			10+80
US 27 RAMP C														
9+92 - 16+28 Rt	1	632		15						1			9+92	
16+28 - 20+32 Rt	1	412		8		1							20+32	
16+28 - 19+45 Lt	1	316		15						1			19+45	
US 27 RAMP D														
10+72 - 19+69 Lt	1	888		15						1			14+00	
19+69 - 25+54 Rt	1	584		23							1		25+54	

① FIELD VERIFY TYPE OF HEADWALL AND OBTAIN ENGINEER'S APPROVAL BEFORE INSTALLING
② INCLUDES 27' FOR ROADBED STABILIZATION AT BRIDGE END
③ INCLUDES 54' FOR ROADBED STABILIZATION AT BRIDGE END
④ INCLUDES 68' FOR ROADBED STABILIZATION AT BRIDGE END

Preliminary Plans

PERFORATED PIPE SUMMARY

FILE NAME: P:\CIVIL\147\N6-2021.00\CONTRACT PLANS AND PROPOSAL\CONTRACT PLAN SET\ROADWAY\R002A05U.DGN
USER: tvonbehren
DATE PLOTTED: January 2, 2012
E-SHEET NAME:
MicroStation v8.11.7.443

PERFORATED PIPE DRAINAGE SUMMARY

COUNTY OF	ITEM NO.	SHEET NO.
CAMPBELL	6-2021.00	R2ar

MILEPOST OR STATIONS	CRUSHED AGGREGATE SIZE NO 2	PERFORATED PIPE 6 INCH	PERFORATED PIPE 8 INCH	NON-PERFORATED PIPE 6 INCH	NON-PERFORATED PIPE 8 INCH	PERF PIPE HEADWALL TY 1-6 INCH ①	PERF PIPE HEADWALL TY 1-8 INCH ①	PERF PIPE HEADWALL TY 2-6 INCH ①	PERF PIPE HEADWALL TY 3-6 INCH ①	PERF PIPE HEADWALL TY 4-6 INCH ①	CORED HOLE DRAINAGE BOX CON-6 INCH	CORED HOLE DRAINAGE BOX CON-8 INCH	PERFORATED PIPE HEADWALL LOCATION	CORED HOLE DRAINAGE BOX LOCATION
ITEM CODE	78	1001	1002	1011	1012	1021	1022	1025	1029	1033	1741	1742		
UNIT TO BID ON	TON	LIN FT				EACH								
GA RAMP E														
10+88 - 14+70 Rt	1	381		15					1				14+70	
20+13 - 25+06 Rt	1	515 ②		8		1							24+87	
27+28 - 37+55 Lt		1023 ②		24							1			37+55
37+55 - 43+59 Rt	1	604		15					1				43+59	
GA RAMP EE														
14+94 - 24+65 Rt	1	965		23						1			24+65	
GA RAMP F														
12+75 - 21+00 Rt	1	824		15					1				12+75	
21+00 - 30+78 Rt	1	978		15					1				21+00	
30+78 - 38+03 Rt		725		5							1			30+78
12+57 - 12+75 Lt		44		5							1			12+75
12+83 - 13+06 Lt		28		5							1			12+83
GA RAMP H														
11+41 - 16+81 Rt		571		13							1			16+81
16+70 - 17+22 Lt		53		48							1			17+22
GA RAMP K														
10+93 - 19+49 Lt	1	852		15					1				14+00	
19+49 - 22+00 Lt	1	249		8		1							22+00	
22+00 - 31+50 Rt		946		5							1			31+50
MP RAMP A														
11+25 - 20+00 Rt	1	874		15					1				14+69	
20+00 - 26+21 Rt	1	619		8		1							20+00	
MP RAMP D														
9+98 - 19+09 Rt		929		8									15+32	
MP RAMP M														
11+04 - 17+15 Lt	1	623		15					1				17+15	
17+15 - 21+00 Rt	1	383		15					1				19+59	
MP RAMP N														
8+84 - 15+91 Rt	1	816 ③		8		1							11+34	
15+80 - 16+73 Lt	1	93		34		1							15+80	

MILEPOST OR STATIONS	CRUSHED AGGREGATE SIZE NO 2	PERFORATED PIPE 6 INCH	PERFORATED PIPE 8 INCH	NON-PERFORATED PIPE 6 INCH	NON-PERFORATED PIPE 8 INCH	PERF PIPE HEADWALL TY 1-6 INCH ①	PERF PIPE HEADWALL TY 1-8 INCH ①	PERF PIPE HEADWALL TY 2-6 INCH ①	PERF PIPE HEADWALL TY 3-6 INCH ①	PERF PIPE HEADWALL TY 4-6 INCH ①	CORED HOLE DRAINAGE BOX CON-6 INCH	CORED HOLE DRAINAGE BOX CON-8 INCH	PERFORATED PIPE HEADWALL LOCATION	CORED HOLE DRAINAGE BOX LOCATION
ITEM CODE	78	1001	1002	1011	1012	1021	1022	1025	1029	1033	1741	1742		
UNIT TO BID ON	TON	LIN FT				EACH								
KY 8 RAMP A														
2+22 - 11+52 Rt		600		24							1			2+22
KY 8 RAMP B														
7+55 - 12+13 Rt		476 ②		14							1			12+13
4+85 - 6+65 Rt	1	206 ②		15		1							6+65	
KY 8 RAMP K														
21+44 - 23+92 Rt	1	315 ④		24							1		21+44	
TOTAL (RAMPS, I-275WB)	29	21807	1383	579	8	10			15	4	10			
PROJECT TOTAL	72	95384	7594	2052	44	25	1	1	24	21	93	4		

① FIELD VERIFY TYPE OF HEADWALL AND OBTAIN ENGINEER'S APPROVAL BEFORE INSTALLING
② INCLUDES 25' FOR ROADBED STABILIZATION AT BRIDGE END
③ INCLUDES 45' FOR ROADBED STABILIZATION AT BRIDGE END
④ INCLUDES 68' FOR ROADBED STABILIZATION AT BRIDGE END

PERFORATED PIPE SUMMARY

Preliminary Plans

FILE NAME: P:\CIVIL\147N6-2021.00\CONTRACT PLANS AND PROPOSAL\CONTRACT PLAN SET\ROADWAY\R0024RSU.DGN
USER: tvonbehren
DATE PLOTTED: January 2, 2012
E-SHEET NAME:
MicroStation v8.11.7.443

PIPE DRAINAGE SUMMARY

COUNTY OF	ITEM NO.	SHEET NO.
CAMPBELL	6-2021.00	R2as

SHEET NO.	LOCATION	SKEW	CULVERT PIPE 15 INCH	CULVERT PIPE 18 INCH	CULVERT PIPE 24 INCH	CURB BOX INLET TYPE A	DROP BOX INLET TYPE 1	DROP BOX INLET TYPE 5A	DROP BOX INLET TYPE 5D	CAP DROP BOX INLET	REMOVE DROP BOX INLET	CON MED BAR BOX INLET TYPE 9B1	ADJUST INLET	RECONSTRUCT MANHOLE	CHANNEL LINING CLASS II	FABRIC GEOTEXTILE TYPE IV FOR PIPE	SAFELOADING	CONCRETE CLASS A	STEEL REINF	PIPELINE VIDEO INSPECTION			REMARKS
ITEM CODE			461	462	464	1456	1490	1502	1511	1584	1585	1621	1719	1789	2483	2600	2690	8100	8150	23131ER701			
UNIT TO BID			LIN FT			EACH									TON	SQ YD	CU YD		LB	LIN FT			
	I-471 SB																						
R18	62+50												1										
R24	70+90		38				1									62				19			
R24	71+31									1													
R24	73+98										1						4						
R24	80+00				30				1							58							
R24	80+32.3									1													
	I-471																						
R26	89+64.3		9									1				15				5			
R26	89+74.3													1									
R26	94+46.5		4									1				7				2			
	I-275 RAMP A																						
R94	6+33.5			70				1							27	121		0.93	8				1 - 18" S&F Headwall
	US 27 RAMP B																						
R38	10+36		78			1									3	43		0.75	7	39			1 - 15" S&F Headwall
	GA RAMP H																						
R61	L+ 16+42														11								
TOTAL PROJECT			129	70	30	1	1	1	1	2	1	2	1	1	41 (1)	306	4	1.68 (1)	15 (1)	65			

(1) QUANTITY CARRIED FORWARD TO THE GENERAL SUMMARY

Preliminary Plans

PIPE DRAINAGE SUMMARY

FILE NAME: P:\CIVIL\147N6-2021.00\CONTRACT PLANS AND PROPOSAL\CONTRACT PLAN SET\ROADWAY\R002ASSU.DGN
USER: tvonbehren
DATE PLOTTED: January 2, 2012
E-SHEET NAME:
MicroStation v8.11.7.443

COUNTY OF	ITEM NO.	SHEET NO.
CAMPBELL	6-2021.00	R2at

GENERAL NOTES

APPLICABLE SPECIAL NOTES FOUND IN THE 2008 STANDARD SPECIFICATIONS

SPECIAL NOTE 1I PORTABLE CHANGEABLE MESSAGE SIGN
SPECIAL NOTE 2E ROADBED STABILIZATION AT BRIDGE ENDS
SPECIAL NOTE 9Y SPECIAL NOTE FOR MATERIAL TRANSFER VEHICLE
SPECIAL NOTE 10T FOR ACCEPTANCE OF JPC PAVEMENT THICKNESS
SPECIAL NOTE 10W FOR WATERBLASTING STRIPING REMOVAL

OTHER SPECIAL NOTES INCLUDED IN THE PROPOSAL

SPECIAL NOTE FOR FIXED COMPLETION DATE AND DISINCENTIVE FEES
SPECIAL NOTE FOR SUBGRADE STABILIZATION
SPECIAL NOTE FOR FULL DEPTH CONCRETE PAVEMENT REPAIR
SPECIAL NOTE FOR K.P.D.E.S. EROSION CONTROL BID ITEM
SPECIAL NOTE FOR UTILITIES
SPECIAL NOTE FOR ALTERNATE PAVEMENT TYPES
SPECIAL NOTE FOR UTILITY LINE HANGAR FOR BRIDGES
SPECIAL NOTE FOR REFERENCES TO SPECIAL PROVISION 76
SPECIAL NOTE FOR ALTERNATE PAVEMENT BID ADJUSTMENT
SPECIAL PROVISION FOR WASTE AND BORROW SITES
GUARDRAIL DELIVERY VERIFICATION SHEET
OTHER SPECIAL NOTES MAY BE INCLUDED IN THE PROPOSAL

STRUCTURE PLANS AND QUANTITIES

SIGNIFICANT STRUCTURE WORK IS INCLUDED IN THIS PROJECT. THE PLANS, BID ITEMS, QUANTITIES AND SPECIAL NOTES FOR THIS WORK ARE INCLUDED IN THE PROPOSAL. FULL SIZE PLANS ARE PROVIDED FOR THE WIDENING OF THE I-275 WESTBOUND BRIDGE OVER THREE MILE ROAD.

CENTERLINES AND BASELINES

THE CENTERLINES AND BASELINES SHOWN IN THESE PLANS ARE BASED ON THE ORIGINAL CONSTRUCTION PLANS FOR THE ROADWAYS. THEY HAVE BEEN BEST FIT TO THE EXISTING ROADWAYS BASED ON FIELD SURVEYS. THE STATIONS STAMPED IN THE EXISTING CONCRETE PAVEMENT ON THE ROADWAYS SHOULD REFLECT THE STATIONS SHOWN FOR WORK IN THESE PLANS WITHIN AN EXPECTED ACCURACY OF 3 FEET OR LESS. THE CONTRACTOR SHOULD RECEIVE THE ENGINEER'S APPROVAL BEFORE BEGINNING WORK ON ANY ITEM WHERE THE STATIONS APPEAR TO BE IN ERROR.

CLEARING AND GRUBBING

CONTRARY TO SECTION 202 OF THE STANDARD SPECIFICATIONS, NO DIRECT PAYMENT WILL BE ALLOWED FOR CLEARING AND GRUBBING ON THIS PROJECT.

MAINTENANCE OF EXISTING PAVEMENT

UPON RECEIPT OF THE "NOTICE TO BEGIN WORK", THE CONTRACTOR SHALL BE RESPONSIBLE FOR MAINTENANCE OF THE ROADWAY THROUGHOUT THE LENGTH AND WIDTH OF THE PROJECT. BE AWARE THAT THIS ROADWAY HAS SIGNIFICANT JOINT FAILURES THAT CONTINUALLY CAUSE POTHOLES TO FORM AND REOCCUR. MANY POTHOLES HAVE BEEN PATCHED IN THE PAST. SOME MAY NEED PATCHING AT THE TIME OF BID AND OTHERS MAY OCCUR BETWEEN THE TIME OF BID AND THE NOTICE TO BEGIN WORK. THE CONTRACTOR SHALL INSPECT AND REPAIR THESE ISSUES AS NECESSARY AND AS FURTHER DIRECTED BY THE ENGINEER SHOULD ADDITIONAL NOTICE BE NECESSARY TO MAINTAIN TRAFFIC IN A SAFE AND REASONABLE MANNER TO AVOID DAMAGE TO THE TRAVELING PUBLIC. SIGNIFICANT SPOT ISSUES SHALL BE REPAIRED WITHIN 24 HOURS OF NOTICE, FOR THE SAFETY AND PROTECTION OF THE TRAVELING PUBLIC AND THEIR PROPERTY AND MAY REQUIRE TEMPORARY, QUICK REPAIRS. OTHER, MORE EXTENSIVE REPAIRS, MAY NEED TO BE SCHEDULED IN ORDER TO PROVIDE A MORE PERMANENT PREVENTATIVE REPAIR THAT WILL LAST THROUGHOUT THE WINTER. THIS ITEM OF WORK, INCLUDING ALL LABOR, MATERIALS AND EQUIPMENT, AS WELL AS PROPER TRAFFIC CONTROL, SHALL BE INCIDENTAL TO THE "MAINTAIN AND CONTROL TRAFFIC" BID ITEM AND SHALL BE SUBJECT TO THE PROVISIONS OF SUPPLEMENTAL SPECIFICATION 112.03.01 REGARDING NON -COMPLIANCE.

BLASTING

BLASTING SHALL BE PROHIBITED ON THIS PROJECT. ROCK ROADWAY AND STRUCTURE EXCAVATION SHALL BE PERFORMED BY A METHOD APPROVED BY THE ENGINEER.

BEFORE YOU DIG

THE CONTRACTOR IS INSTRUCTED TO CALL 1-800-752-6007 TO REACH KY 811, THE ONE-CALL SYSTEM FOR INFORMATION ON THE LOCATION OF EXISTING UNDERGROUND UTILITIES. THE CALL IS TO BE PLACED A MINIMUM OF TWO (2) AND NO MORE THAN TEN (10) BUSINESS DAYS PRIOR TO EXCAVATION. THE CONTRACTOR SHOULD BE AWARE THAT OWNERS OF UNDERGROUND FACILITIES ARE NOT REQUIRED TO BE MEMBERS OF THE KY 811 ONE-CALL BEFORE-U-DIG (BUD) SERVICE. THE CONTRACTOR MUST COORDINATE EXCAVATION WITH THE UTILITY OWNERS, INCLUDING THOSE WHOM DO NOT SUBSCRIBE TO KY 811. IT MAY BE NECESSARY FOR THE CONTRACTOR TO CONTACT THE COUNTY COURT CLERK TO DETERMINE WHAT UTILITY COMPANIES HAVE FACILITIES IN THE AREA.

STANDARD DRAWINGS

STANDARD DRAWINGS ARE NOT ATTACHED TO THESE PLANS. A STANDARD DRAWING BOOK AND THE HEADWALL SUPPLEMENT BOOK MAY BE OBTAINED FROM THE POLICY SUPPORT BRANCH OF THE DEPARTMENT OF ADMINISTRATIVE SERVICES IN FRANKFORT, KENTUCKY AT (502) 564-3670.

JPC PAVEMENT RIDE QUALITY

APPLY JPC PAVEMENT SMOOTHNESS REQUIREMENTS, IN ACCORDANCE WITH SUBSECTION 501.03.19 OF THE STANDARD SPECIFICATIONS, ON THIS PROJECT.

ASPHALT PAVEMENT RIDE QUALITY

PAVEMENT RIDEABILITY REQUIREMENTS, IN ACCORDANCE WITH SECTION 410 OF THE STANDARD SPECIFICATIONS, SHALL APPLY ON THIS PROJECT. CATEGORY A SHALL APPLY.

COMPACTION OF ASPHALT MIXTURES

WILL ACCEPT THE COMPACTION OF ASPHALT MIXTURES FURNISHED FOR DRIVING LANES AND RAMPS AT ONE INCH OR GREATER ON THIS PROJECT BY OPTION A ACCORDING TO SUBSECTIONS 402 AND 403 OF THE CURRENT STANDARD SPECIFICATIONS. USE JOINT CORES AS DESCRIBED IN SUBSECTION 402.03.02 FOR SURFACE MIXTURES ONLY. WILL ACCEPT THE COMPACTION OF ALL OTHER ASPHALT MIXTURES BY OPTION B.

EXISTING LANDSCAPE MATERIAL

DO NOT DISTURB LANDSCAPE PLANTS UNLESS ABSOLUTELY NECESSARY.

DO NOT TO DISTURB ANY PLANTS WITHOUT PRIOR APPROVAL OF THE PROJECT ENGINEER.

THE PROJECT ENGINEER SHALL NOTIFY THE DISTRICT AGRONOMIST FOR POSSIBLE DEPARTMENT SALVAGE OF ANY PLANTS NEEDING REMOVAL.

CEMENT STABILIZED ROADBED

STABILIZE THE TOP 12 INCHES OF THE FINISHED ROADBED WITH PORTLAND CEMENT IN ACCORDANCE WITH SECTION 208 OF THE STANDARD SPECIFICATIONS. USE SELECTED SOILS, WITH A MINIMUM CBR VALUE OF 2 FOR THIS PURPOSE.

THE PORTLAND CEMENT CONTENT IS 6 PERCENT BY WEIGHT, AND THE ESTIMATED PLAN QUANTITY USES AN AVERAGE DRY DENSITY OF 108 LBS/CUBIC FOOT. HOWEVER, ADJUST THE QUANTITY AFTER CONSTRUCTING THE ROADBED AND SUBMITTING THE SAMPLES FOR TESTING. THIS TAKES APPROXIMATELY TWO WEEKS.

HOOK BOLTS IN JPC PAVEMENT

THE USE OF A HOOK BOLT WITH EXPANSION ANCHORS FOR TYING THE LONGITUDINAL JOINT IN JPC PAVEMENT WILL NOT BE PERMITTED.

Preliminary Plans

MicroStation v8.11.7.443
E-SHEET NAME:
USER: tvonbehren
DATE PLOTTED: January 2, 2012
FILE NAME: P:\CIVIL\147\N6-2021.00\CONTRACT PLANS AND PROPOSAL\CONTRACT PLAN SET\ROADWAY\R002ATSU.DGN

COUNTY OF	ITEM NO.	SHEET NO.
CAMPBELL	6-2021.00	R3

CONVENTIONAL SIGNS

SURVEY LINE
GRADE LINE
GROUND LINE
COUNTY LINE
CORPORATE LIMITS
EXIST. PROPERTY LINE
EXIST. RIGHT OF WAY & PROPERTY LINE
PROPOSED RIGHT OF WAY
RIGHT OF WAY MONUMENT
BENCH MARK
EXISTING R/W MARKER
RIGHT OF WAY MONUMENT EXISTING/PROPOSED
UTILITY TEST HOLE
EXISTING ROAD
RAILROAD
FENCE (CONTROLLED ACCESS)
FENCE (EXCEPT STONE AND HEDGE)
TREE LINE
TREES
PIPE CULVERT
CULVERT
BRIDGE
BUILDINGS
GUARDRAIL

	EXISTING	PROPOSED
LIGHTING POLE		
POWER POLE		
JOINT POWER & TELEPHONE POLE		
TELEPHONE & TELEGRAPH POLE		
ANCHOR, POWER OR TELEPHONE		
STUB POWER		
STUB TELEPHONE		
WATER MAIN	WM	6" WM
GAS MAIN	GM	6" GM
TELEPHONE DUCT	T	T
ELECTRIC DUCT	E	E
DIRECT BURIAL TV CABLE	TV	TV
SANITARY SEWER (WITH MANHOLE)	SAN	SAN
STORM SEWER (WITH MANHOLE)	STORM	STORM
DIRECT BURIAL ELECTRIC CABLE	E	E
DIRECT BURIAL TELEPHONE CABLE	T	T
OVERHEAD WIRE		
TRAFFIC LIGHTS		
ELECTRIC MANHOLE	EMH	EMH
TELEPHONE MANHOLE	TMH	TMH

STONE FENCE
HEDGE FENCE
SWAMP OR MARSH
SPRINGS
SINKHOLE
QUARRY SITE
BLUE LINE STREAM
INTERMITTENT STREAM OR DITCH
LAKES OR PONDS
REGULATED FLOODWAY
NORTH POINT

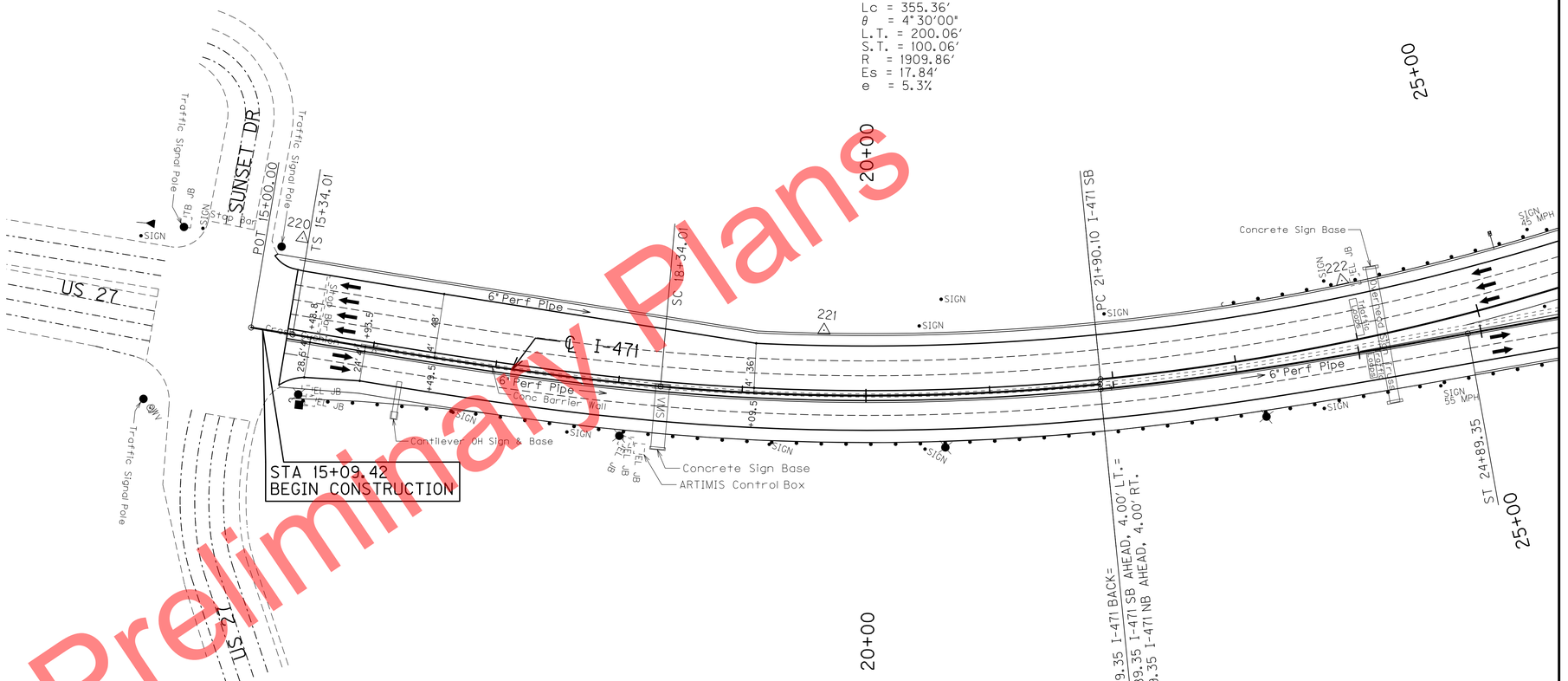

Preliminary Plans

REMOVE GUARDRAIL

Rt I-471 Sta 15+41 to I-471 NB Sta 25+00 - 972.5 Lin Ft
Lt I-471 SB Sta 23+00 to Sta 25+00 - 200 Lin Ft

CONSTRUCT GUARDRAIL-STEEL W BEAM S-FACE

Rt I-471 Sta 15+41 to I-471 NB Sta 25+00 - 935 Lin Ft
w/ 1 - Guardrail End Treatment Type 4A

Lt I-471 SB Sta 23+00 to Sta 25+00 - 200 Lin Ft
w/ 1 - Guardrail End Treatment Type 2A

SCALE: 1" = 50'

DESIGNED BY:
DATE SUBMITTED:

Commonwealth of Kentucky
DEPARTMENT OF HIGHWAYS
COUNTY OF

CAMPBELL

PROJECT NUMBERS: IMNH 4714(034)
FD52 019 0471 000-05

PLAN
I-471 STA 15+00 TO STA 21+89.35
I-471 NB & SB STA 21+89.35 TO STA 25+00

FILE NAME: P:\CIVIL\471\N6-2021.00\CONTRACT PLANS AND PROPOSAL\CONTRACT PLAN SET\ROADWAY\R0030PL.DGN
USER: tvonbehren
DATE PLOTTED: January 2, 2012
E-SHEET NAME:
MicroStation v8.11.7.443

COUNTY OF	ITEM NO.	SHEET NO.
CAMPBELL	6-2021.00	R4

Preliminary Plans

DATUM 870 860 850 840 830 820 810 800

I-471 (NB)
RT EDGE PAVEMENT

I-471 (NB)
RT EDGE PAVEMENT

15+00 16+00 17+00 18+00 19+00 20+00 21+00 22+00 23+00 24+00 25+00

847.3 847.25 | 847.2 847.26 | 847.2 847.18 | 847.3 847.09 | 847.2 847.07 | 847.1 847.00 | 846.7 846.69 | 846.1 846.06 | 845.2 845.24 | 844.1 844.23 | 842.9 843.03 | 841.6 841.65 | 840.2 840.08

838.5 838.33 | 836.5 836.38 | 834.6 834.43 | 832.7 832.48 | 830.8 830.59 | 828.8 828.74 | 826.8 826.90

STA 15+09.42 - BEGIN
℄ I-471 CONSTRUCTION

VPI 15+30.80
Elev 847.30

VPI 16+00.00
Elev 847.00

Sta 16+47.22 End Transition From
Existing Pavement & Reverse Crown

VPI 17+00.00
Elev 846.39

VPI 17+70.84
Elev 846.05

Sta 18+34.01 End Runoff & Begin
Full Superelevation (e=5.3%)

PVC 17+87.50
Elev 845.95

-0.43% -0.61% -0.47% -0.61%

VPI 19+75.00
Elev 844.80

L 375 FT
SD 572 FT

PVT 21+62.50
Elev 838.39

-3.42%

Equation

VPI 21+89.35
Elev 837.47

Sta 21+89.35 End Full Superelevation
(e=5.3%) & Begin Runoff

VPI 21+89.35
Elev 837.47

-3.47%

Sta 23+76.14 Reverse Crown

Sta 24+89.35 Flat Section Rt
End Runoff & Begin Runout

SCALE: 1" = 50' HORIZONTAL
1" = 10' VERTICAL

℄ I-471 (NB)
PROFILE GRADE

I-471 (NB)
PROFILE GRADE

847.2 847.21 | 847.0 847.00 | 846.7 846.69 | 846.4 846.39 | 846.2 846.15 | 845.9 845.87 | 845.4 845.42 | 844.8 844.79 | 844.0 843.97 | 842.9 842.96 | 841.7 841.76 | 840.4 840.38 | 838.8 838.81 | 837.1 837.10 | 835.4 835.37

833.7 833.63 | 832.0 831.89 | 830.2 830.16 | 828.4 828.42 | 826.6 826.68

15+00 16+00 17+00 18+00 19+00 20+00 21+00 22+00 23+00 24+00 25+00

PROFILE SHEET
℄ I-471 NB STA 15+09.42 TO STA 21+89.37
I-471 NB STA 21+89.35 TO STA 25+00

FILE NAME: P:\CIVIL\471\6-2021.00\CONTRACT PLANS AND PROPOSAL\CONTRACT PLAN SET\ROADWAY\R004OOPF.DGN
USER: tvonbehren
DATE PLOTTED: January 2, 2012
E-SHEET NAME:
MicroStation v8.11.7.443

COUNTY OF	ITEM NO.	SHEET NO.
CAMPBELL	6-2021.00	R5

Preliminary Plans

DATUM 880 870 860 850 840 830 820 810 800

℄ I-471 (SB)
LT EDGE PAVEMENT

I-471 (SB)
LT EDGE PAVEMENT

15+00 16+00 17+00 18+00 19+00 20+00 21+00 22+00 23+00 24+00 25+00

846.3 846.34 | 845.8 845.99 | 845.3 845.62 | 844.8 844.97 | 844.3 844.38 | 843.9 843.72 | 843.4 843.19 | 842.9 842.82 | 842.1 842.05 | 841.1 841.04 | 839.9 839.82 | 838.5 838.42 | 837.0 836.93 | 835.4 835.28 | 833.7 833.54 | 832.0 831.81 | 830.2 830.07 | 828.4 828.27 | 826.5 826.48 | 824.8 824.69

STA 15+09.42 - BEGIN
℄ I-471 CONSTRUCTION

VPI 15+31.12
Elev 847.18

-0.49%

Sta 16+47.22 End Transition From Existing Pavement & Reverse Crown

VPI 17+00.00
Elev 846.36

-0.40%

VPI 17+50.00
Elev 846.16

-0.72%

VPI 18+00.00
Elev 845.80

-0.80%

Sta 18+34.01 End Runoff & Begin Full Superelevation (e=5.3%)

PVC 18+25.00
Elev 845.60

L 250 FT
SD 651 FT

VPI 19+50.00
Elev 844.60

PVT 20+75.00
Elev 841.04

-2.85%

VPI 21+00.00
Elev 840.33

-2.98%

VPI 21+50.00
Elev 838.84

-3.29%

Equation
Sta 21+89.37

VPI 22+00.00
Elev 837.19

-3.47%

VPI 23+50.00
Elev 831.98

-3.59%

SCALE: 1" = 50' HORIZONTAL
1" = 10' VERTICAL

℄ I-471 (SB)
PROFILE GRADE

I-471 (SB)
PROFILE GRADE

847.2 847.1 847.09 | 846.9 846.85 | 846.6 846.60 | 846.3 846.36 | 846.2 846.16 | 845.8 845.80 | 845.4 845.37 | 844.8 844.77 | 843.9 843.96 | 842.9 842.94 | 841.6 841.73 | 840.3 840.33 | 838.8 838.84 | 837.2 837.19 | 835.4 835.45

15+00 16+00 17+00 18+00 19+00 20+00 21+00 22+00

833.7 833.71 | 832.0 831.98 | 830.2 830.18 | 828.3 828.39 | 826.5 826.59

23+00 24+00 25+00

PROFILE SHEET
℄I-471 SB STA 15+09.42 TO STA 21+89.37
I-471 SB STA 21+89.37 TO STA 25+00

FILE NAME: P:\CIVIL\471N6-2021.00\CONTRACT PLANS AND PROPOSAL\CONTRACT PLAN SET\ROADWAY\R0050OPF.DGN
USER: tvonbehren
DATE PLOTTED: January 2, 2012
E-SHEET NAME:
MicroStation v8.11.7.443

COUNTY OF	ITEM NO.	SHEET NO.
CAMPBELL	6-2021.00	R6

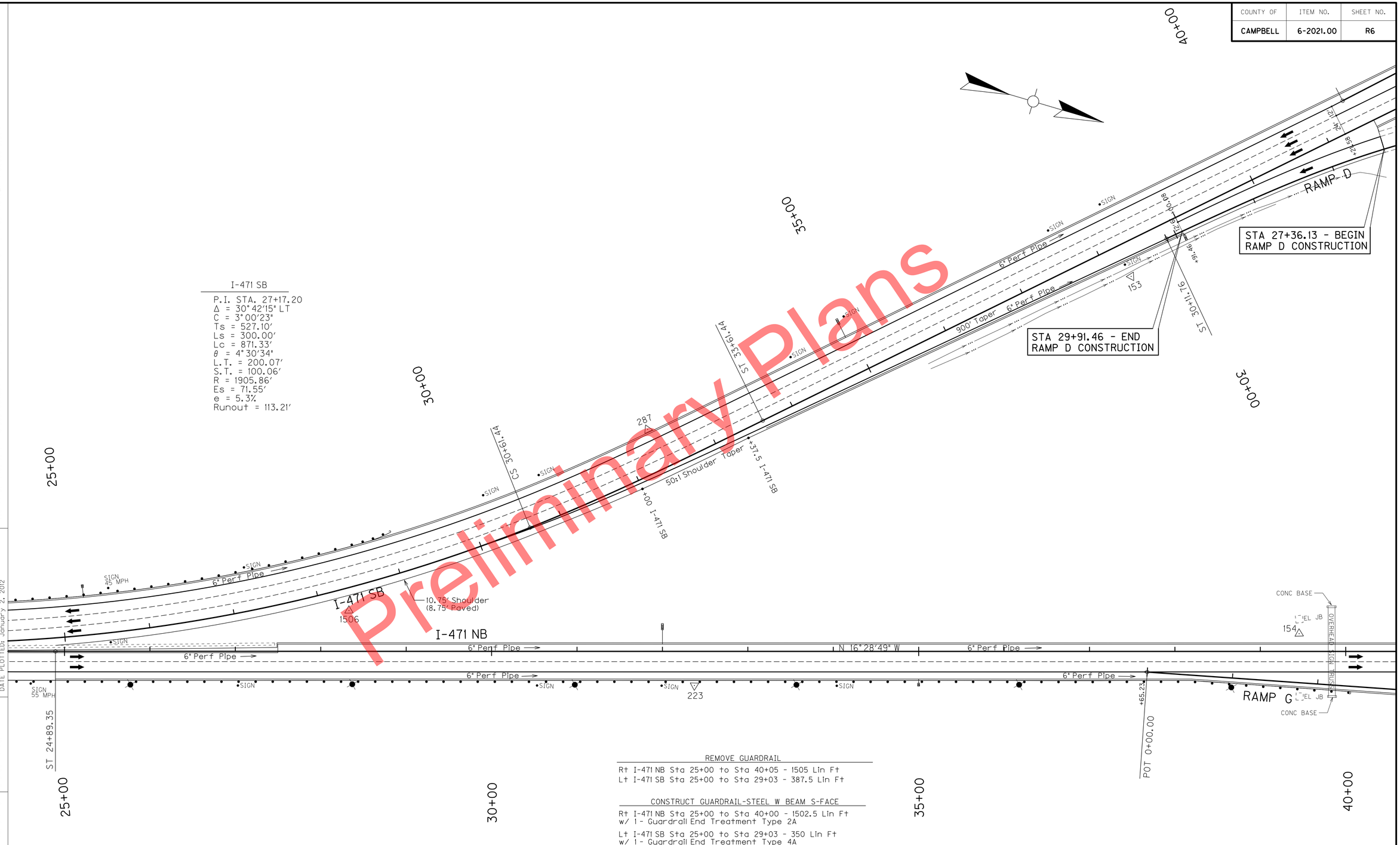

REMOVE GUARDRAIL

Rt I-471 NB Sta 25+00 to Sta 40+05 - 1505 Lin Ft
Lt I-471 SB Sta 25+00 to Sta 29+03 - 387.5 Lin Ft

CONSTRUCT GUARDRAIL-STEEL W BEAM S-FACE

Rt I-471 NB Sta 25+00 to Sta 40+00 - 1502.5 Lin Ft
w/ 1 - Guardrail End Treatment Type 2A

Lt I-471 SB Sta 25+00 to Sta 29+03 - 350 Lin Ft
w/ 1 - Guardrail End Treatment Type 4A

SCALE: 1"= 50'

PLAN
I-471 NB STA 25+00 TO STA 40+00
I-471 SB STA 25+00 TO STA 40+00

FILE NAME: P:\CIVIL\I471\6-2021.00\CONTRACT PLANS AND PROPOSAL\CONTRACT PLAN SET\ROADWAY\R00600PL.DGN
USER: tvonbehren
DATE PLOTTED: January 2, 2012
E-SHEET NAME:
MicroStation v8.11.7.443

COUNTY OF	ITEM NO.	SHEET NO.
CAMPBELL	6-2021.00	R7

DATUM

I-471 (NB)
RT EDGE OF PAVEMENT

ALONG RT EDGE OF PAVEMENT | ALONG RAMP G TAPER

25+00	26+00	27+00	28+00	29+00	30+00	31+00	32+00	33+00	34+00	35+00	36+00	37+00	38+00	39+00	40+00
826.8	824.9	823.1	821.4	819.7	818.0	816.3	814.6	812.9	811.1	809.3	807.6	805.8	804.2	802.4	800.7
826.90	825.06	823.22	821.47	819.74	818.00	816.27	814.53	812.79	811.06	809.32	807.58	805.85	804.11	802.37	800.64
799.0	797.2	795.5	793.7	791.9	790.2	788.4	786.5	784.53	782.81	781.15	779.41	777.72	775.89	773.97	
798.90	797.17	795.43	793.69	791.96	790.21	788.43	786.6	784.9	783.1	781.2	779.4	777.6	775.8	773.9	

Preliminary Plans

Sta 26+02.56 End Runout
& Begin Normal Section

-3.47%

VPI 35+37.60
Elev 790.65

-3.56%

VPI 38+62.50
Elev 779.08

-3.31%

SCALE: 1" = 50' HORIZONTAL
1" = 10' VERTICAL

I-471 (NB)
PROFILE GRADE

25+00	26+00	27+00	28+00	29+00	30+00	31+00	32+00	33+00	34+00	35+00	36+00	37+00	38+00	39+00	40+00
826.6	824.8	823.1	821.4	819.6	818.0	816.3	814.6	812.9	811.1	809.3	807.6	805.9	804.2	802.4	800.7
826.68	824.95	823.21	821.47	819.74	818.00	816.27	814.53	812.79	811.06	809.32	807.58	805.85	804.11	802.37	800.64
799.0	797.3	795.5	793.7	792.0	790.2	788.5	786.5	784.5	782.8	781.1	779.5	777.8	776.2	774.6	
798.90	797.17	795.43	793.69	791.96	790.21	788.43	786.65	784.87	783.09	781.31	779.53	777.84	776.19	774.54	

PROFILE SHEET

I-471 NB STA 25+00 TO STA 40+00

FILE NAME: P:\CIVIL\147N6-2021.00\CONTRACT PLANS AND PROPOSAL\CONTRACT PLAN SET\ROADWAY\R07OPF.DGN
USER: tvonbehren
DATE PLOTTED: January 2, 2012
E-SHEET NAME:
MicroStation v8.11.7.443

COUNTY OF	ITEM NO.	SHEET NO.
CAMPBELL	6-2021.00	R8

DATUM 840 830 820 810 800 790 780 770 760

I-471 (SB)
LT EDGE OF PAVEMENT

25+00	26+00	27+00	28+00	29+00	30+00	31+00	32+00	33+00	34+00	35+00	36+00	37+00	38+00	39+00	40+00
824.8 824.69	823.1 822.89	821.5 821.22	819.7 819.54	818.0 817.87	816.3 816.19	814.5 814.52	812.8 812.78	811.0 811.04	809.3 809.29	807.5 807.55	805.9 805.81	804.4 804.31	803.0 802.89	801.6 801.46	800.1 800.03	798.5 798.39	796.9 796.76	795.2 795.12	793.6 793.49	791.8 791.80	790.1 790.05	788.3 788.31	786.6 786.57	784.8 784.83	783.0 783.08	781.3 781.34	779.7 779.60	777.9 777.86	776.2 776.12	774.4 774.37

Preliminary Plans

VPI 25+50.00
Elev 824.80

-3.59%

-3.35%

VPI 28+00.00
Elev 816.43

ALONG RT EDGE OF PAVEMENT

ALONG RAMP D TAPER

ALONG RAMP D TAPER

-3.48%

Sta 30+61.44 End Full Superelevation (e=5.3%) & Begin Runoff

Sta 32+48.23 Reverse Crown

Sta 33+61.44 Flat Section Rt End Runoff & Begin Runout

Sta 34+74.64 End Runoff & Begin Normal Section

I-471 (SB)
PROFILE GRADE

SCALE: 1" = 50' HORIZONTAL
1" = 10' VERTICAL

25+00	26+00	27+00	28+00	29+00	30+00	31+00	32+00	33+00	34+00	35+00	36+00	37+00	38+00	39+00	40+00
826.5 826.59	824.8 824.80	823.2 823.13	821.5 821.45	819.9 819.78	818.2 818.10	816.4 816.43	814.7 814.69	812.9 812.94	811.1 811.20	809.4 809.46	807.6 807.72	805.9 805.97	804.2 804.23	802.5 802.49	800.8 800.75	799.0 799.01	797.3 797.26	795.5 795.52	793.8 793.78	792.0 792.04	790.3 790.29	788.5 788.55	786.8 786.81	785.0 785.07	783.2 783.32	781.5 781.58	779.8 779.84	778.1 778.10	776.3 776.36	774.6 774.61

PROFILE SHEET

I-471 SB STA 25+00 TO STA 40+00

FILE NAME: P:\CIVIL\147IN6-2021.00\CONTRACT PLANS AND PROPOSAL\CONTRACT PLAN SET\ROADWAY\R0080PF.DGN
USER: tvonbehren
DATE PLOTTED: January 2, 2012
E-SHEET NAME:
MicroStation v8.11.7.443

COUNTY OF	ITEM NO.	SHEET NO.
CAMPBELL	6-2021.00	R9

Preliminary Plans

RAMP E
P.I. STA. 12+25.44
Δ = 90°45'29" LT
C = 4°45'17"
Ts = 1225.44'
Ls = 311.56'
Lc = 1687.04'
θ = 10°32'32"
L.T.= 177.26'
S.T.= 135.15'
R = 1205.0'
Es = 513.64'
e = 7.0%
Runoff =] See Devpmt
Runout =] Plan

RAMP G
P.I. STA. 13+30.00
Δ = 82°32'24" RT
C = 7°00'00"
Ts = 872.17'
Ls = 300.00'
Lc = 879.14'
θ = 10°30'00"
L.T.= 200.35'
S.T.= 100.32'
R = 818.51'
Es = 276.59'
e = 7.9%
Runoff =] See Devpmt
Runout =] Plan

I-471 NB
P.I. STA. 52+73.01
Δ = 45°10'42" LT
C = 3°00'00"
Ts = 945.36'
Ls = 300.00'
Lc = 1205.95'
θ = 4°30'00"
L.T. = 200.06'
S.T. = 100.06'
R = 1909.86'
Es = 160.82'
e = 5.3%
Runout = 113.21'

STA 3+20.35 - BEGIN
RAMP E CONSTRUCTION

STA 4+87.28 - END
RAMP E CONSTRUCTION

STA 4+55.88 - BEGIN
RAMP G CONSTRUCTION

STA 4+85.44 - END
RAMP G CONSTRUCTION

PLAN
I-471 NB STA 40+00 TO STA 55+00

SCALE: 1"= 50'

FILE NAME: P:\CIVIL\147\N6-2021.00\CONTRACT PLANS AND PROPOSAL\CONTRACT PLAN SET\ROADWAY\R09900PL.DGN
USER: tvonbehren
DATE PLOTTED: January 2, 2012
E-SHEET NAME:
MicroStation v8.11.7.443

COUNTY OF	ITEM NO.	SHEET NO.
CAMPBELL	6-2021.00	R10

DATUM

790 780 770 760 750 740 730 720 710 700

ALONG RAMP G TAPER | ALONG RT EDGE OF PAVEMENT

I-471 (NB)
RT EDGE OF PAVEMENT

40+00	41+00	42+00	43+00	44+00	45+00	46+00	47+00	48+00	49+00	50+00	51+00	52+00	53+00	54+00	55+00
774.0	772.0	770.2	768.3	766.5	765.7	764.2	762.7	761.1	759.6	758.0	756.5	754.9	753.2	751.3	749.5	747.6	745.7	743.8	741.7	739.7	737.8	735.9	733.9	732.0	730.1	728.2	726.2	724.3	722.5	720.9
773.88	772.09	770.23	768.35	766.47	765.80	764.35	762.76	761.13	759.52	757.99	756.47	754.94	753.30	751.38	749.45	747.52	745.60	743.67	741.74	739.82	737.89	735.96	734.03	732.11	730.18	728.25	726.33	724.40	722.61	721.02

VPI 40+62.40
Elev 772.47

-3.31%

-3.48%

-3.85%

VPI 46+45.30
Elev 752.21

Sta 42+14.44 End Normal Section & Begin Runout

Sta 43+27.64 Flat Section Rt End Runout & Begin Runoff

Sta 44+40.85 Reverse Crown

Sta 46+27.64 End Runoff & Begin Full Superelevation (e = 5.3%)

ALONG RAMP E TAPER

PVC 53+88.70
Elev 723.56

L 440 FT
SD 585 FT

SCALE: 1" = 50' HORIZONTAL
1" = 10' VERTICAL

I-471 (NB)
PROFILE GRADE

774.6	772.9	771.2	769.4	767.6	765.9	764.2	762.5	760.8	759.1	757.3	755.6	753.8	752.0	750.2	748.3	746.4	744.4	742.4	740.5	738.5	736.6	734.7	732.7	730.7	728.9	726.9	725.0	723.1	721.3	719.7
774.54	772.88	771.17	769.43	767.69	765.95	764.21	762.48	760.74	759.00	757.26	755.53	753.79	752.03	750.11	748.18	746.25	744.32	742.40	740.47	738.54	736.62	734.69	732.76	730.84	728.91	726.98	725.05	723.13	721.34	719.74

ALONG RAMP E

40+00	41+00	42+00	43+00	44+00	45+00	46+00	47+00	48+00	49+00	50+00	51+00	52+00	53+00	54+00	55+00

PROFILE SHEET

I-471 NB STA 40+00 TO STA 55+00

Preliminary Plans

FILE NAME: P:\CIVIL\147IN6-2021.00\CONTRACT PLANS AND PROPOSAL\CONTRACT PLAN SET\ROADWAY\R010OOPF.DGN
USER: tvonbehren
DATE PLOTTED: January 2, 2012
E-SHEET NAME:
MicroStation v8.11.7.443

COUNTY OF	ITEM NO.	SHEET NO.
CAMPBELL	6-2021.00	R11

Preliminary Plans

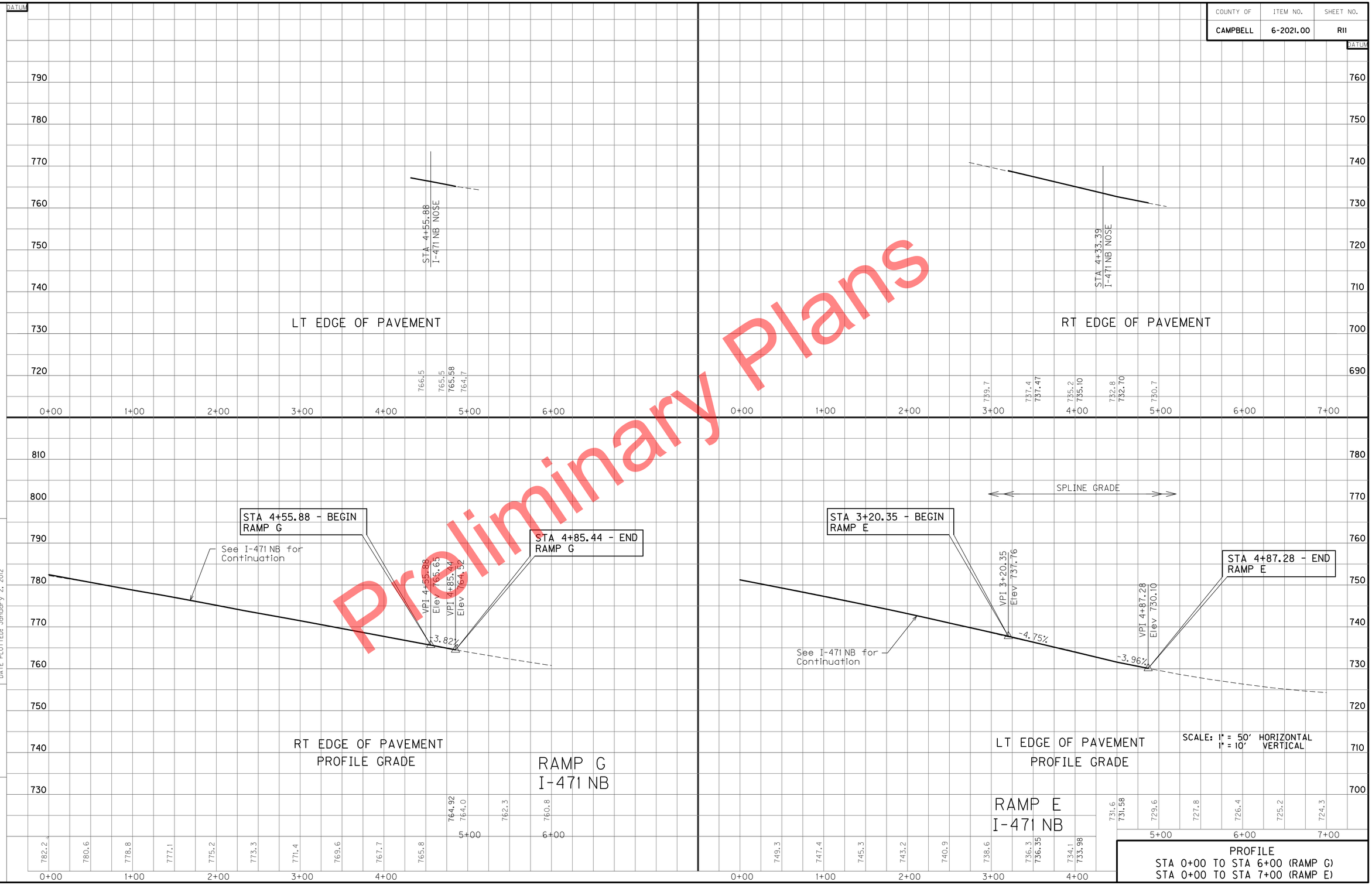

PROFILE
STA 0+00 TO STA 6+00 (RAMP G)
STA 0+00 TO STA 7+00 (RAMP E)

FILE NAME: P:\CIVIL\471\6-2021.00\CONTRACT PLANS AND PROPOSAL\CONTRACT PLAN SET\ROADWAY\R01OOPF.DGN
USER: tvonbehren
DATE PLOTTED: January 2, 2012
E-SHEET NAME:
MicroStation v8.11.7.443

COUNTY OF	ITEM NO.	SHEET NO.
CAMPBELL	6-2021.00	R12

REMOVE GUARDRAIL

Lt I-471 SB Sta 42+48 to Sta 46+45 - 399 Lin Ft

CONSTRUCT GUARDRAIL-STEEL W BEAM S-FACE

Lt I-471 SB Sta 42+48 to Sta 46+45 - 400 Lin Ft
w/ 1 - Guardrail End Treatment Type 2A &
1 - Guardrail End Treatment Type 3

RAMP C

P.I. 12+82.05
Δ = 61°06'06" RT
C = 5°00'00"
Ts = 828.21'
Ls = 300.00'
Lc = 922.03'
θ = 7°30'00"
L.T.= 200.18'
S.T.= 100.16'
R = 1145.92'
Es = 188.52'
e = 5.3%
Runoff = 300'
Runout = 113.21'

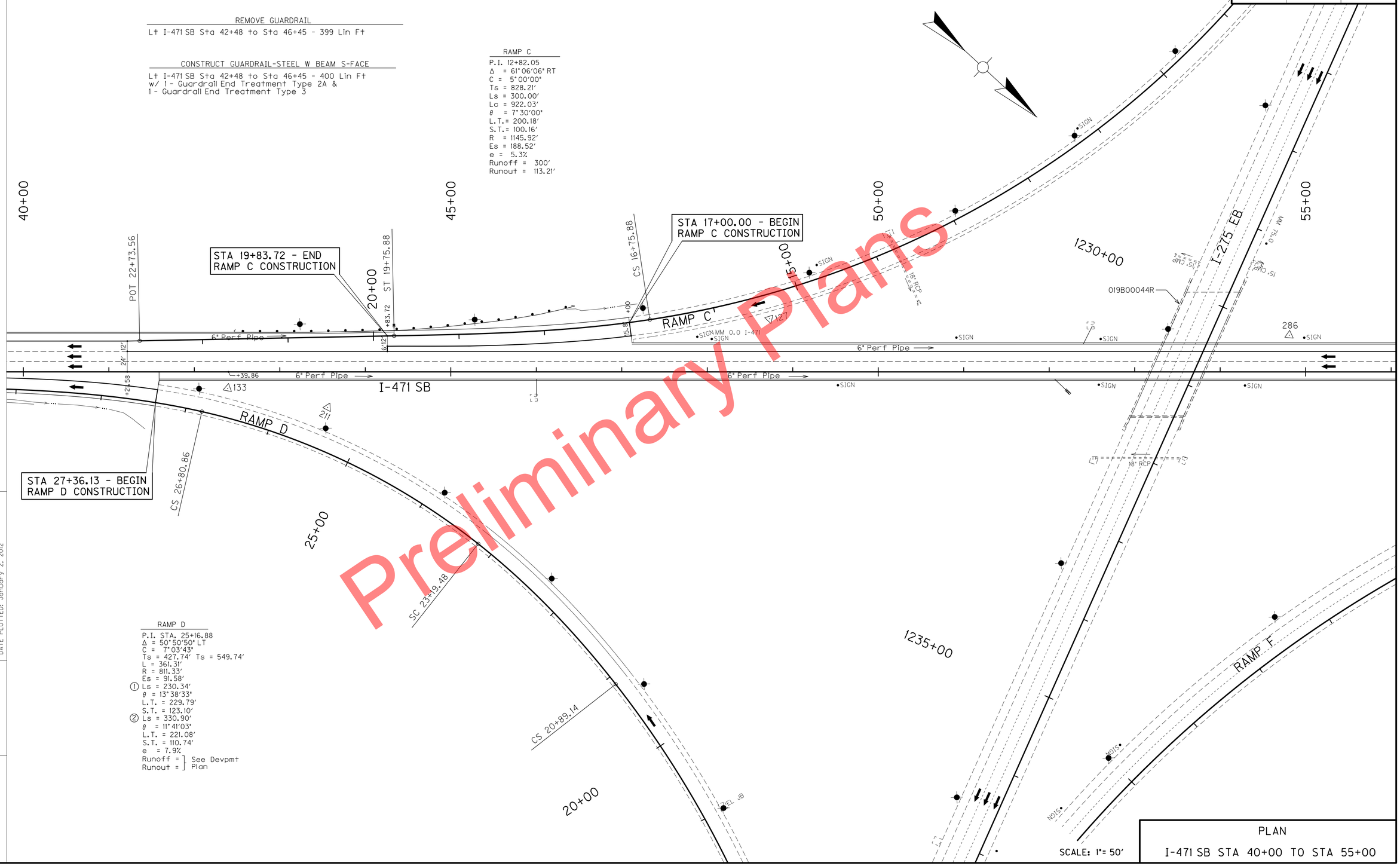

RAMP D

P.I. STA. 25+16.88
Δ = 50°50'50" LT
C = 7°03'43"
Ts = 427.74' Ts = 549.74'
L = 361.31'
R = 811.33'
Es = 91.58'
① Ls = 230.34'
θ = 13°38'33"
L.T. = 229.79'
S.T. = 123.10'
② Ls = 330.90'
θ = 11°41'03"
L.T. = 221.08'
S.T. = 110.74'
e = 7.9%
Runoff =] See Devpmt
Runout =] Plan

SCALE: 1"= 50'

PLAN

I-471 SB STA 40+00 TO STA 55+00

Preliminary Plans

FILE NAME: P:\CIVIL\I471\6-2021.00\CONTRACT PLANS AND PROPOSAL\CONTRACT PLAN SET\ROADWAY\R01200PL.DGN
USER: tvonbehren
DATE PLOTTED: January 2, 2012
E-SHEET NAME:
MicroStation v8.11.7.443

COUNTY OF	ITEM NO.	SHEET NO.
CAMPBELL	6-2021.00	R13

ALONG RAMP G TAPER

ALONG RT EDGE OF PAVEMENT

I-471 (SB)
LT EDGE OF PAVEMENT

VPI 40+50.00
Elev 772.87

-3.48%

-3.55%

VPI 44+50.00
Elev 758.65

-3.31%

L 150 FT
SD 1176 FT

PVC 47+60.00
Elev 748.38

VPI 48+35.00
Elev 745.90

PVT 49+10.00
Elev 743.78

-2.82%

VPI 53+00.00
Elev 732.78

-2.79%

I-471 (SB)
PROFILE GRADE

SCALE: 1" = 50' HORIZONTAL
1" = 10' VERTICAL

PROFILE SHEET

I-471 SB STA 40+00 TO STA 55+00

Preliminary Plans

FILE NAME: P:\CIVIL\471N6-2021.00\CONTRACT PLANS AND PROPOSAL\CONTRACT PLAN SET\ROADWAY\R01300PF.DGN
USER: tvonbehren
DATE PLOTTED: January 2, 2012
E-SHEET NAME:
MicroStation v8.11.7.443

COUNTY OF	ITEM NO.	SHEET NO.
CAMPBELL	6-2021.00	RI4

Preliminary Plans

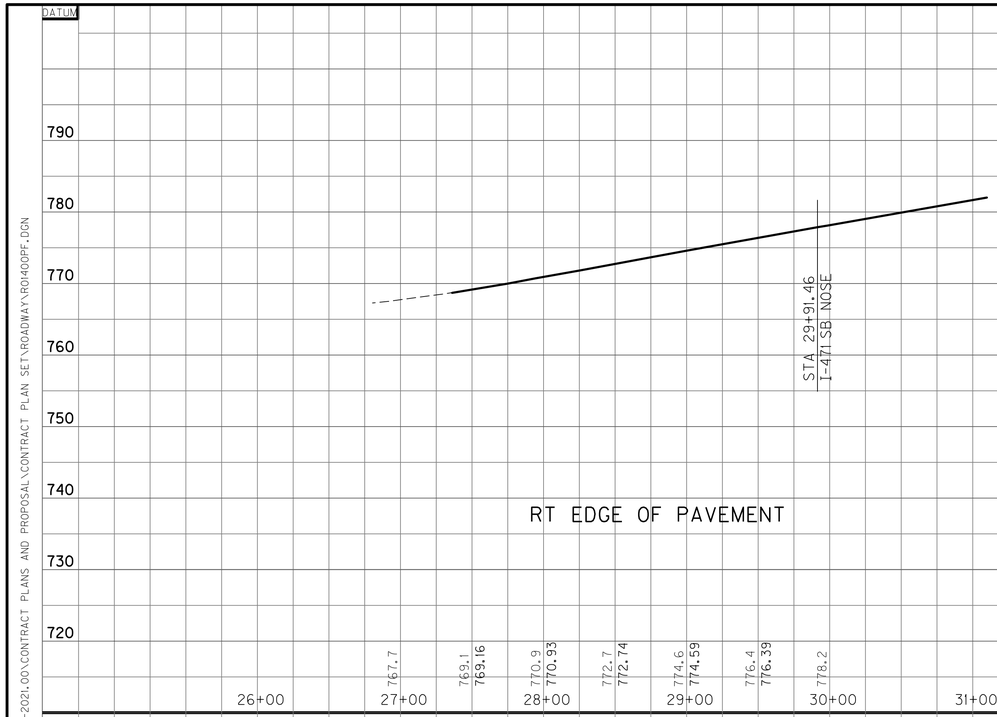

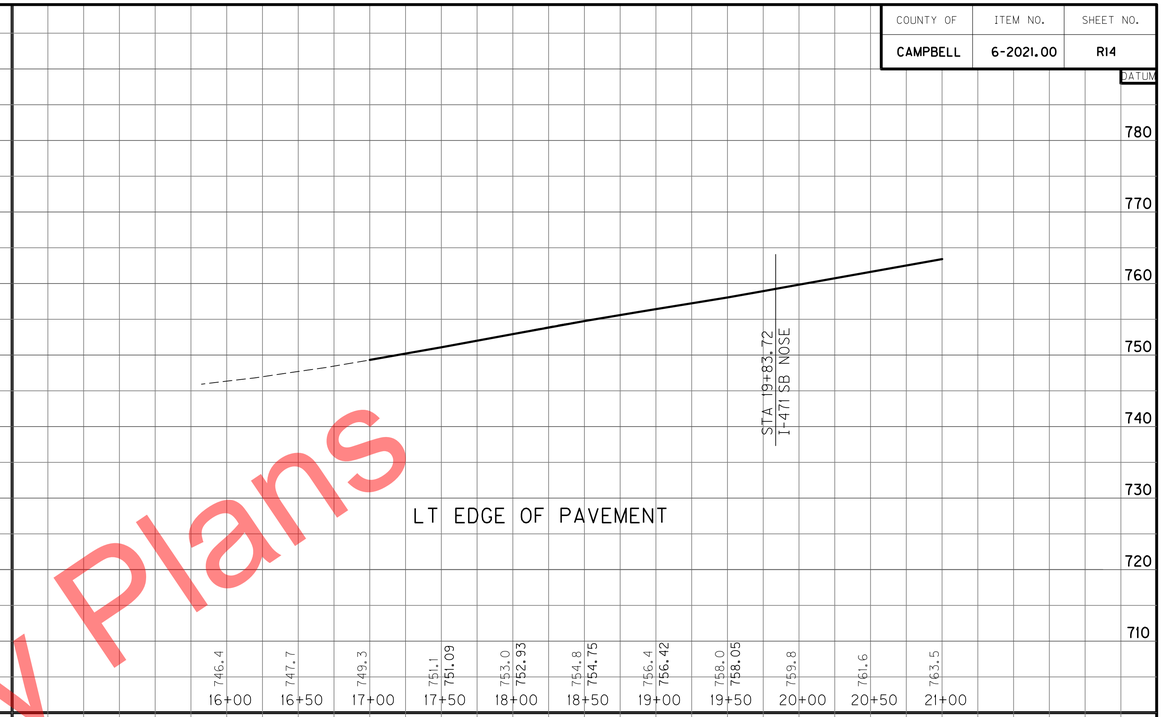

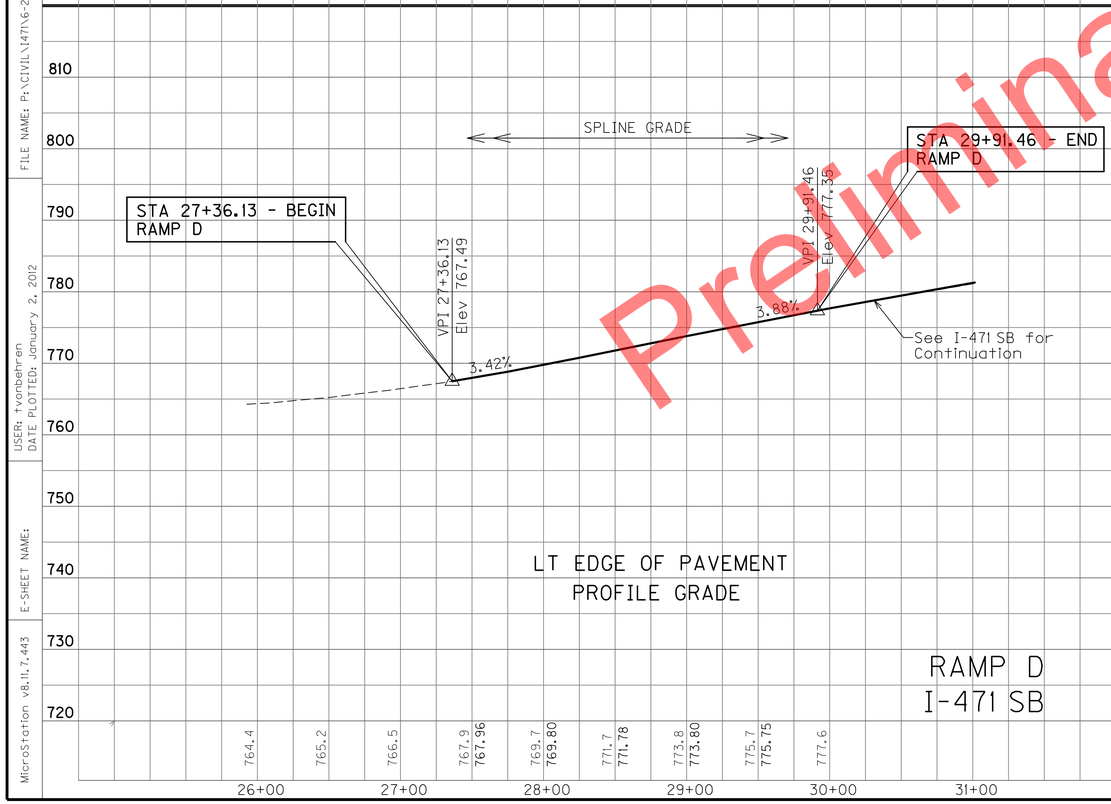

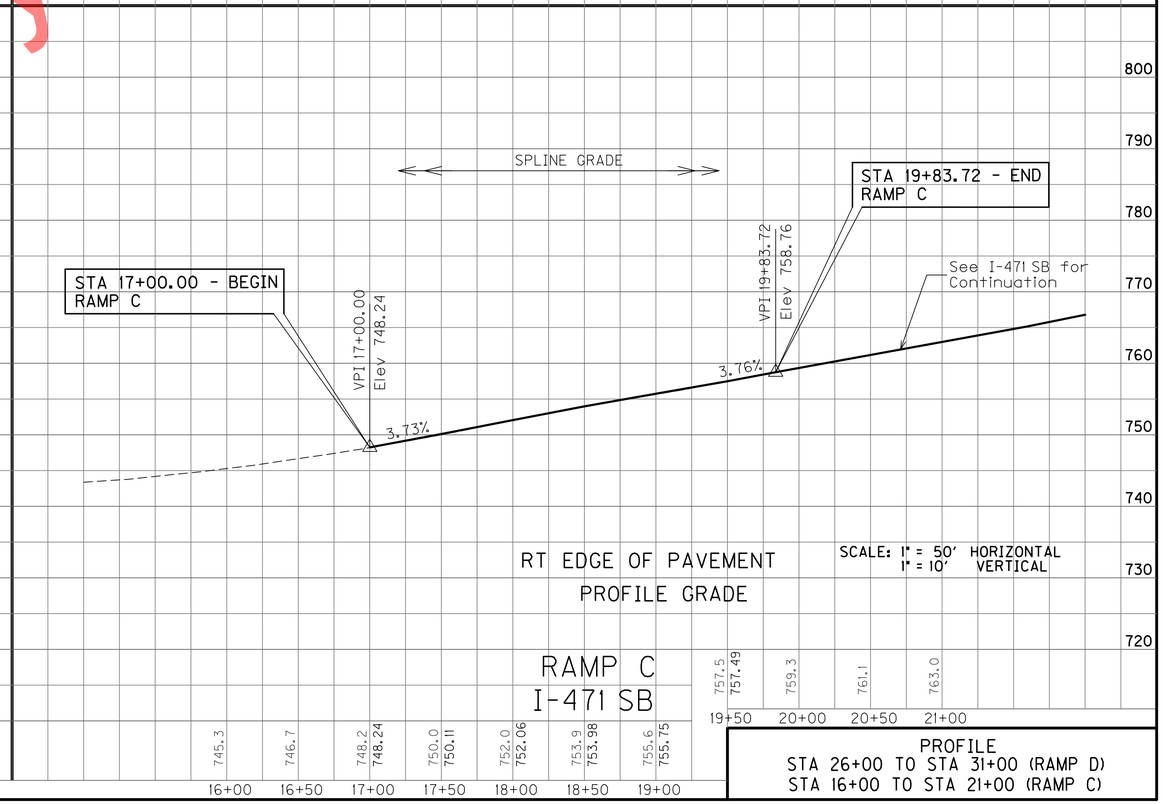

SCALE: 1" = 50' HORIZONTAL
1" = 10' VERTICAL

PROFILE
STA 26+00 TO STA 31+00 (RAMP D)
STA 16+00 TO STA 21+00 (RAMP C)

FILE NAME: P:\CIVIL\471\6-2021.00\CONTRACT PLANS AND PROPOSAL\CONTRACT PLAN SET\ROADWAY\RDI400PF.DGN
USER: tvanbehren
DATE PLOTTED: January 2, 2012
E-SHEET NAME:
MicroStation v8.11.7.443

COUNTY OF	ITEM NO.	SHEET NO.
CAMPBELL	6-2021.00	R15

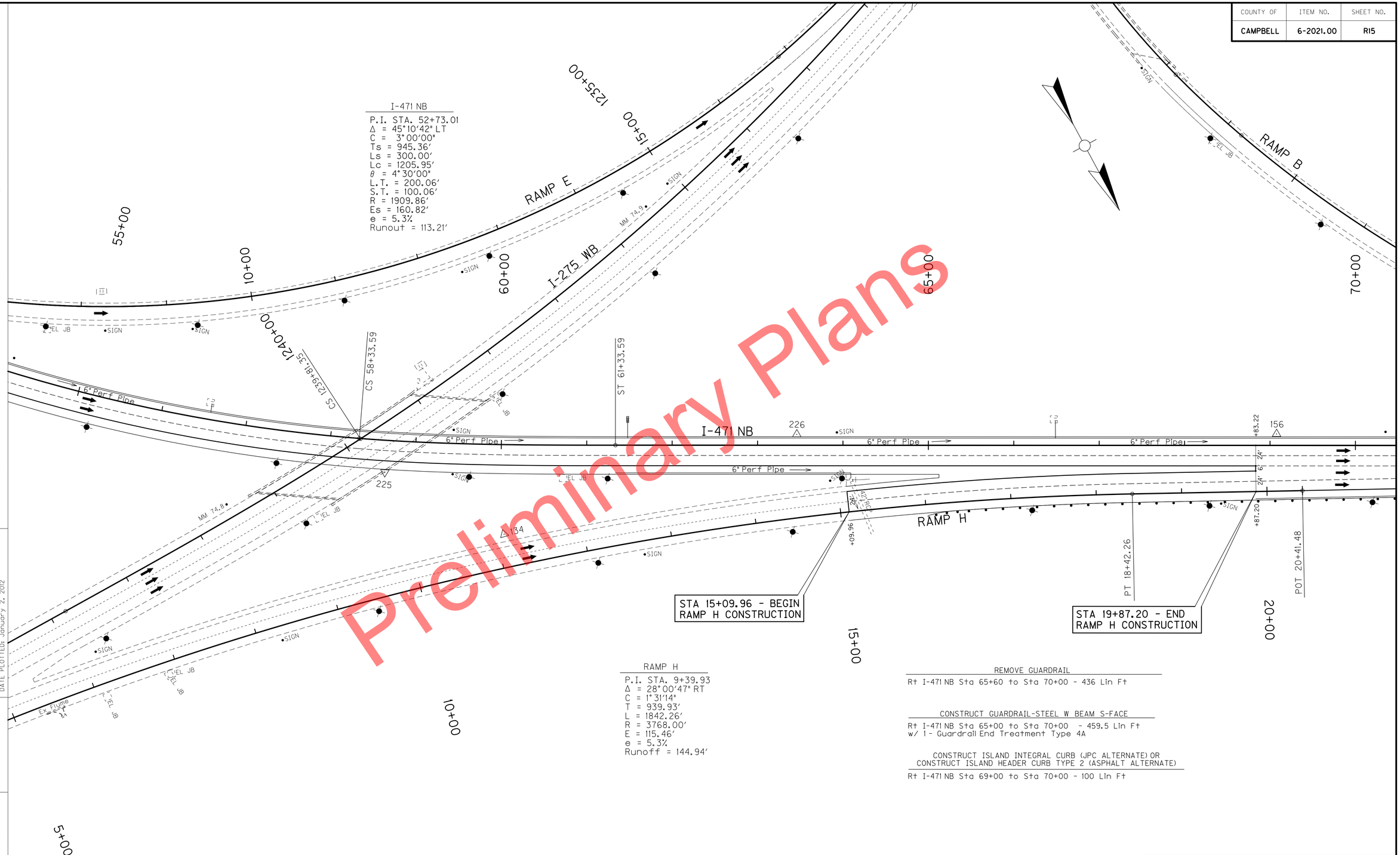

RAMP H

P.I. STA. 9+39.93
Δ = 28°00'47" RT
C = 1°31'14"
T = 939.93'
L = 1842.26'
R = 3768.00'
E = 115.46'
e = 5.3%
Runoff = 144.94'

REMOVE GUARDRAIL

Rt I-471 NB Sta 65+60 to Sta 70+00 - 436 Lin Ft

CONSTRUCT GUARDRAIL-STEEL W BEAM S-FACE

Rt I-471 NB Sta 65+00 to Sta 70+00 - 459.5 Lin Ft
w/ 1 - Guardrail End Treatment Type 4A

CONSTRUCT ISLAND INTEGRAL CURB (JPC ALTERNATE) OR
CONSTRUCT ISLAND HEADER CURB TYPE 2 (ASPHALT ALTERNATE)

Rt I-471 NB Sta 69+00 to Sta 70+00 - 100 Lin Ft

SCALE: 1"= 50'

PLAN

I-471 NB STA 55+00 TO STA 70+00

FILE NAME: P:\CIVIL\I471\6-2021.00\CONTRACT PLANS AND PROPOSAL\CONTRACT PLAN SET\ROADWAY\R01500PL.DGN

USER: tvonbehren
DATE PLOTTED: January 2, 2012

E-SHEET NAME:

MicroStation v8.11.7.443

COUNTY OF	ITEM NO.	SHEET NO.
CAMPBELL	6-2021.00	R16

DATUM 750 740 730 720 710 700 690 680 670 660

ALONG RT EDGE OF PAVEMENT — ALONG RAMP H TAPER

I-471 (NB)
RT EDGE OF PAVEMENT

55+00	56+00	57+00	58+00	59+00	60+00	61+00	62+00	63+00	64+00	65+00	66+00	67+00	68+00	69+00	70+00
720.9	719.6	718.4	717.3	716.5	715.9	715.4	715.0	714.7	714.2	713.7	713.2	712.9	712.5	712.3	712.0
721.02	719.61	718.39	717.36	716.53	715.88	715.42	715.07	714.61	714.14	713.68	713.28	712.92	712.56	712.21	711.86

63+00	64+00	65+00	66+00	67+00	68+00	69+00	70+00
711.6	711.3	711.0	710.8	710.4	710.1	709.8	709.6	709.3	709.0	708.8	708.4	707.6	707.4	707.1
711.58	711.29	710.99	710.70	710.40	710.11	709.81	709.52	709.22	708.93	708.64	708.34	707.45	707.18	706.90

Preliminary Plans

L 440 FT
SD 585 FT

VPI 56+08.70
Elev 715.08

PVT 58+28.70
Elev 713.98

Sta 58+33.59 End Full Superelevation
(e = 5.3%) & Begin Runoff

-0.50%

Sta 60+20.38 Reverse Crown

Sta 61+33.59 Flat Section Rt
End Runoff & Begin Runout

VPI 62+75.00
Elev 711.73

Sta 62+46.80 End Runout
& Begin Normal Section

-0.59%

I-471 (NB)
PROFILE GRADE

SCALE: 1" = 50' HORIZONTAL
1" = 10' VERTICAL

55+00	56+00	57+00	58+00	59+00	60+00	61+00	62+00	63+00	64+00	65+00	66+00	67+00	68+00	69+00	70+00
719.7	718.4	717.1	716.0	715.2	714.7	714.2	713.9	713.6	713.3	713.1	712.9	712.6	712.3	712.1	711.8
719.74	718.34	717.12	716.09	715.25	714.61	714.15	713.87	713.62	713.37	713.11	712.86	712.61	712.36	712.11	711.86

63+00	64+00	65+00	66+00	67+00	68+00	69+00	70+00
711.5	711.2	710.9	710.6	710.3	710.1	709.8	709.5	709.2	708.9	708.6	708.3	708.0	707.7	707.4
711.58	711.29	710.99	710.70	710.40	710.11	709.81	709.52	709.22	708.93	708.64	708.34	708.05	707.75	707.46

PROFILE SHEET

I-471 NB STA 55+00 TO STA 70+00

FILE NAME: P:\CIVIL\147IN6-2021.00\CONTRACT PLANS AND PROPOSAL\CONTRACT PLAN SET\ROADWAY\R016OOPF .DGN
USER: tvonbehren
DATE PLOTTED: January 2, 2012
E-SHEET NAME:
MicroStation v8.11.7.443

COUNTY OF	ITEM NO.	SHEET NO.
CAMPBELL	6-2021.00	R17

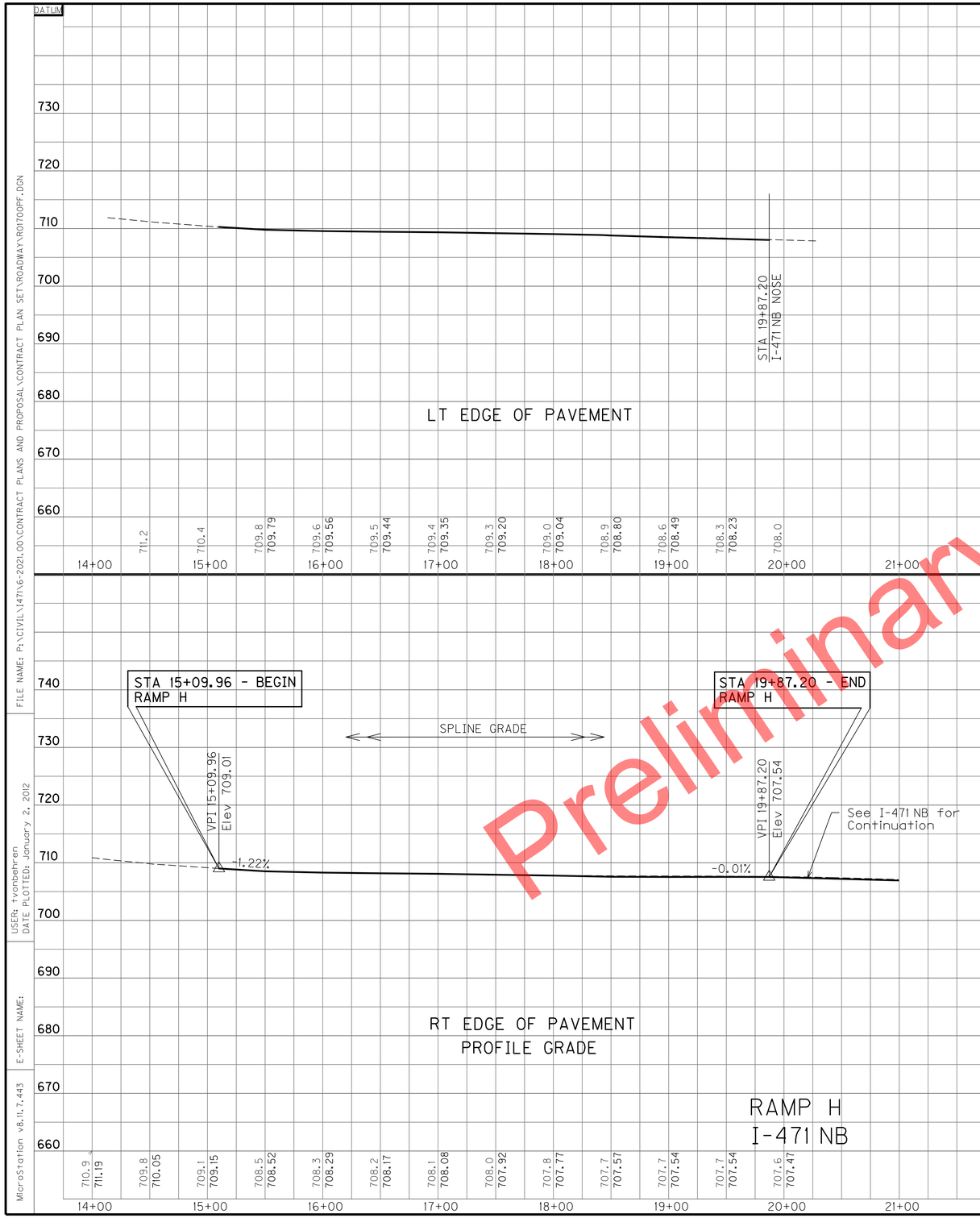

Preliminary Plans

SCALE: 1" = 50' HORIZONTAL
1" = 10' VERTICAL

PROFILE

STA 14+00 TO STA 21+00 (RAMP H)

FILE NAME: P:\CIVIL\I471\6-2021.00\CONTRACT PLANS AND PROPOSAL\CONTRACT PLAN SET\ROADWAY\R01700PF.DGN
USER: tvonbehren
DATE PLOTTED: January 2, 2012
E-SHEET NAME:
MicroStation v8.11.7.443

COUNTY OF	ITEM NO.	SHEET NO.
CAMPBELL	6-2021.00	R18

Preliminary Plans

I-275 EB

I-275 WB

I-471 SB

RAMP A

RAMP B

RAMP E

RAMP F

55+00

60+00

65+00

70+00

10+00

15+00

20+00

1230+00

1235+00

15+00

10+00

25+00

30+00

5+00

MM 75.0

MM 74.9

15' CURB

2' FB DT

3' FB DT

SIGN

SSMH

286

285

136

137

151

144

6" Perf Pipe

30" RCP

42" RCP

24" RCP

24"

Adjust Inlet
TC 705.8

ADJUST INLET
Rt I-471 SB Sta 62+50 - 1 Each

N 42° 41' 38.51" W

SC 19+98.59

SC 11+55.68

CS 16+87.04

PT 16+76.78

PC 17+01.36

PCC 17+65.85

CS 8+11.25 +15.78

CS 23+15.65

SC 24+20.28

PCC 2+69.29

36' Taper

120' Taper

62.48

104.43

+27.96

RAMP F
P.I. STA. 18+06.07
Δ = 60° 46' 39" LT
C = 3° 59' 26"
Ts = 994.82' (1) Ts = 1020.88' (2)
Ls = 344.43' (1) Ls = 352.55' (2)
Lc = 1153.45'
θ = 7° 42' 49" (1) θ = 7° 02' 04" (2)
L.T.= 217.34' (1) L.T. = 235.22' (2)
S.T.= 127.55' (1) S.T. = 117.68' (2)
R = 1435.77'
Es = 233.62'
e = 8.0%

REMOVE GUARDRAIL
Lt I-471 SB Sta 66+55 to Sta 70+14 - 360 Lin Ft

CONSTRUCT GUARDRAIL-STEEL W BEAM S-FACE
Lt I-471 SB Sta 66+55 to Sta 70+05 - 312.5 Lin Ft
w/ 1 Guardrail End Treatment Type 2A &
1 - Guardrail End Treatment Type 4A

STA 9+75 - END
RAMP F CONSTRUCTION

STA 5+21.18 - BEGIN
RAMP F CONSTRUCTION

RAMP F
P.I. STA. 1+74.65
Δ = 2° 10' 09" LT
C = 1° 08' 45"
T = 94.66'
L = 189.30'
R = 5000.00'
E = 0.90'
e = 2.0%

RAMP F
P.I. STA. 5+40.32
Δ = 2° 38' 52" LT
C = 0° 29' 19"
T = 271.03'
L = 541.96'
R = 11727.72'
E = 3.13'
e = 2.0%

SCALE: 1"= 50'

PLAN
I-471 SB STA 55+00 TO STA 70+00

MicroStation v8.11.7.443
E-SHEET NAME:
USER: tvonbehren
DATE PLOTTED: January 2, 2012
FILE NAME: P:\CIVIL\471\6-2021.00\CONTRACT PLANS AND PROPOSAL\CONTRACT PLAN SET\ROADWAY\R018OOPL.DGN

COUNTY OF	ITEM NO.	SHEET NO.
CAMPBELL	6-2021.00	R19

DATUM

740
730
720
710
700
690
680
670
660

I-471 (SB)
LT EDGE OF PAVEMENT

55+00	56+00	57+00	58+00	59+00	60+00	61+00	62+00	63+00	64+00	65+00	66+00	67+00	68+00	69+00	70+00
727.2	725.8	724.3	722.9	721.5	720.2	718.8	717.3	715.9	714.5	713.2	711.8	710.4	709.1	707.6	706.4	705.1	703.8	702.6	701.4	700.4	699.3	698.2	697.1	696.0	694.9	693.8	692.8	691.7	690.6	689.5
727.19	725.79	724.40	723.00	721.60	720.21	718.81	717.41	716.02	714.62	713.22	711.83	710.43	709.08	707.78	706.41	705.04	703.73	702.58	701.48	700.38	699.28	698.18	697.08	695.99	694.89	693.79	692.68	691.57	690.46	689.37

Preliminary Plans

-2.79%

PVC 60+80.00
Elev 710.99

L 300 FT
SD 1875 FT

VPI 62+30.00
Elev 706.80

Sta 62+12.39 End Normal Section & Begin Runout

Sta 62+87.39 Flat Section Rt End Runout & Begin Runoff

Sta 63+62.39 End Runoff & Begin Reverse Crown

PVT 63+80.00
Elev 703.50

-2.20%

ALONG RT EDGE OF PAVEMENT

ALONG RAMP F TAPER

ALONG RAMP F TAPER

-2.22%

VPI 68+00.00
Elev 694.27

I-471 (SB)
PROFILE GRADE

55+00	56+00	57+00	58+00	59+00	60+00	61+00	62+00	63+00	64+00	65+00	66+00	67+00	68+00	69+00	70+00
727.2	725.8	724.4	723.0	721.6	720.2	718.8	717.4	716.0	714.5	713.1	711.8	710.4	709.0	707.7	706.5	705.3	704.1	703.0	701.8	700.7	699.6	698.6	697.5	696.1	695.0	694.3	693.2	692.1	691.0	689.8
727.19	725.79	724.40	723.00	721.60	720.21	718.81	717.41	716.02	714.62	713.22	711.83	710.43	709.08	707.78	706.53	705.32	704.17	703.06	701.96	700.86	699.76	698.66	697.56	696.47	695.37	694.27	693.16	692.05	690.94	689.83

696.1	695.1	694.0	692.9	691.8	690.8	689.6
696.02	694.96	693.90	692.82	691.74	690.66	689.59

SCALE: 1" = 50' HORIZONTAL
1" = 10' VERTICAL

PROFILE SHEET

I-471 SB STA 55+00 TO STA 70+00

FILE NAME: P:\CIVIL\147IN6-2021.00\CONTRACT PLANS AND PROPOSAL\CONTRACT PLAN SET\ROADWAY\R01900PF.DGN
USER: tvonbehren
DATE PLOTTED: January 2, 2012
E-SHEET NAME:
MicroStation v8.11.7.443

COUNTY OF	ITEM NO.	SHEET NO.
CAMPBELL	6-2021.00	R20

DATUM

720
710
700
690
680
670
660
650

STA 8+15.78
I-471 SB NOSE

RT EDGE OF PAVEMENT

4+00	5+00	6+00	7+00	8+00	9+00	10+00	11+00
	696.8	698.0 697.99	699.0 699.06	700.0 700.11	701.0 701.11	702.1 702.18	703.1 703.22	704.3 704.26	705.3 705.23	706.2 706.20	707.3

740
730
720
710
700
690
680
670
660
650

SPLINE GRADE

VPI 5+21.18
Elev 696.90

VPI 9+75.00
Elev 705.68

See I-471 SB for Continuation

2.13%

1.62%

STA 5+21.18 - BEGIN RAMP F

STA 9+75.00 - END RAMP F

LT EDGE OF PAVEMENT
PROFILE GRADE

4+00	5+00	6+00	7+00	8+00	9+00	10+00	11+00
694.4	695.5	696.5	697.7 697.51	698.7 698.58	699.6 699.63	700.6 700.63	701.7 701.70	702.8 702.74	703.7 703.66	704.5 704.47	705.2 705.28	706.2	707.3	708.5

RAMP F
I-471 SB

SCALE: 1" = 50' HORIZONTAL
1" = 10' VERTICAL

PROFILE

STA 4+00 TO STA 11+00 (RAMP F)

Preliminary Plans

FILE NAME: P:\CIVIL\471\6-2021.00\CONTRACT PLANS AND PROPOSAL\CONTRACT PLAN SET\ROADWAY\R02000PF.DGN
USER: tvonbehren
DATE PLOTTED: January 2, 2012
E-SHEET NAME:
MicroStation v8.11.7.443

COUNTY OF	ITEM NO.	SHEET NO.
CAMPBELL	6-2021.00	R21

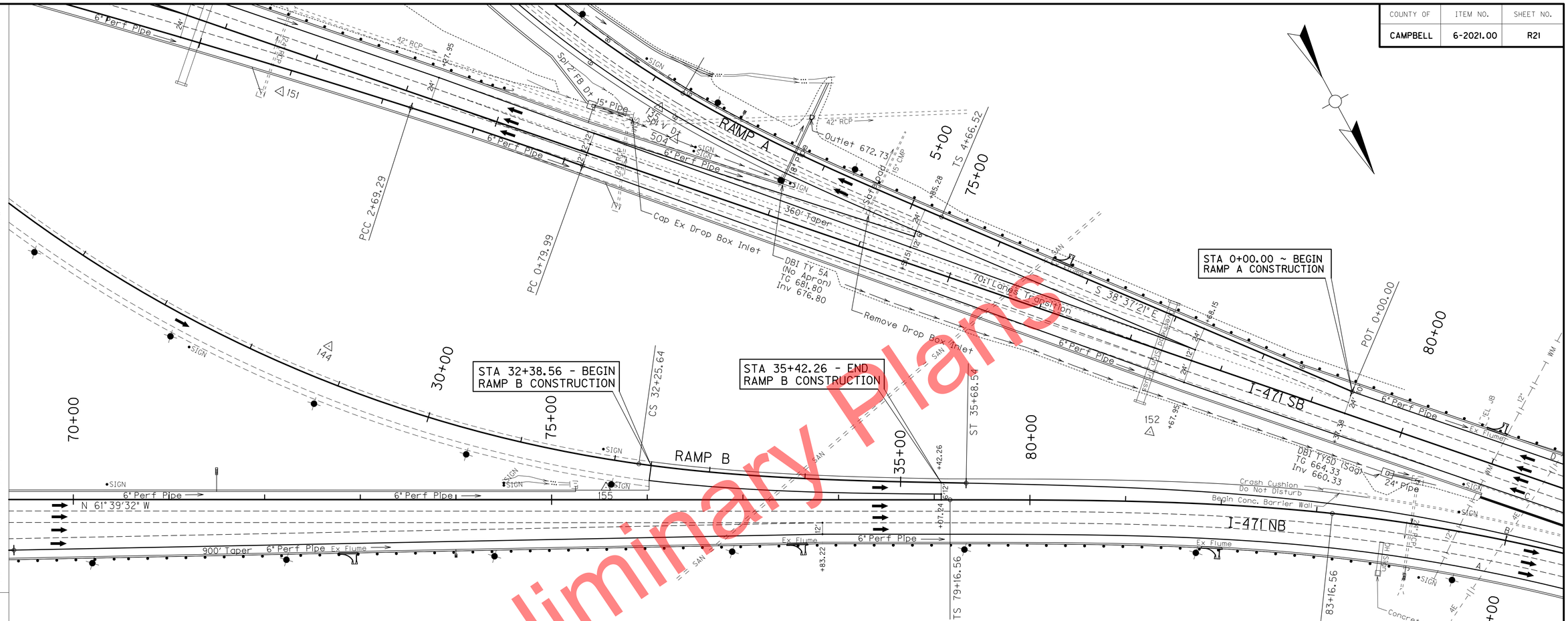

Preliminary Plans

REMOVE GUARDRAIL

Rt I-471 NB Sta 70+00 to Sta 84+03 - 1403 Lin Ft

CONSTRUCT GUARDRAIL-STEEL W BEAM S-FACE

Rt I-471 NB Sta 70+00 to Sta 84+03 - 1403 Lin Ft
w/ 1 - Guardrail End Treatment Type 2A

CONSTRUCT ISLAND INTEGRAL CURB (JPC ALTERNATE) OR
CONSTRUCT ISLAND HEADER CURB TYPE 2 (ASPHALT ALTERNATE)

Rt I-471 NB Sta 70+00 to Sta 72+77 - 277 Lin Ft
Rt I-471 NB Sta 72+99 to Sta 77+46 - 447 Lin Ft
Rt I-471 NB Sta 77+68 to Sta 81+81 - 413 Lin Ft

CONSTRUCT FLUME INLET TYPE 2

Rt I-471 NB Sta 72+93 - 1 Each
Rt I-471 NB Sta 77+62 - 1 Each
Rt I-471 NB Sta 81+99 - 1 Each

RAMP B

P.I. STA. 29+34.29
Δ = 39°22'30" LT
C = 4°01'52"
T = 514.01' Ts = 675.75'
Ls = 342.90'
Lc = 805.36'
θ = 6°54'40"
L.T. = 228.78'
S.T. = 114.46'
R = 1421.39'
Es = 90.08'
e = 6.3% to 0.12%

LOW WIRE CLEARANCE TABLE

LOCATION			
A	B	C	D
29.2'	24.0'	23.6'	21.9'

I-471 NB

P.I. STA. 85+25.53
Δ = 24°51'57" RT
C = 3°01'54"
Ts = 608.97'
Ls = 400.00'
Lc = 620.18'
θ = 6°03'49"
L.T. = 266.82'
S.T. = 133.48'
R = 1889.86'
Es = 47.21'
e = 5.3%
Runout = 150.94'

SCALE: 1"= 50'

PLAN

I-471 NB STA 70+00 TO STA 85+00

FILE NAME: P:\CIVIL\471\6-2021.00\CONTRACT PLANS AND PROPOSAL\CONTRACT PLAN SET\ROADWAY\R02100PL.DGN
USER: tvonbehren
DATE PLOTTED: January 2, 2012
E-SHEET NAME:
MicroStation v8.11.7.443

COUNTY OF	ITEM NO.	SHEET NO.
CAMPBELL	6-2021.00	R22

Preliminary Plans

ALONG RAMP F TAPER

I-471 (NB)
RT EDGE OF PAVEMENT

-0.59%
PVC 70+38.50
Elev 707.23

VPI 74+76.00
Elev 704.65

L 875 FT
SD 772 FT

PVT 79+13.50
Elev 688.21

ALONG RAMP B TAPER

ALONG RAMP B TAPER

-3.76%

Sta 77+65.62 End Normal Section & Begin Runout

Sta 79+16.56 Flat Section L+ End Runout & Begin Runoff

Sta 80+67.50 Reverse Crown

Sta 83+16.56 End Runoff & Begin Full Super-elevation (e = 5.3%)

PVC 84+37.50
Elev 668.51

I-471 (NB)
PROFILE GRADE

SCALE: 1" = 50' HORIZONTAL
1" = 10' VERTICAL

PROFILE SHEET

I-471 NB STA 70+00 TO STA 85+00

FILE NAME: P:\CIVIL\147IN6-2021.00\CONTRACT PLANS AND PROPOSAL\CONTRACT PLAN SET\ROADWAY\R02200PF.DGN
USER: tvonbehren
DATE PLOTTED: January 2, 2012
E-SHEET NAME:
MicroStation v8.11.7.443

COUNTY OF	ITEM NO.	SHEET NO.
CAMPBELL	6-2021.00	R23

DATUM

710
700
690
680
670
660
650
640

700.8 699.3 697.9 697.80 696.2 696.18 694.6 694.76 693.0 693.24 691.5 691.61 690.0 689.95 688.3

31+00 32+00 33+00 34+00 35+00 36+00 37+00

STA 19+87.20
I-471 NB NOSE

RT EDGE OF PAVEMENT

730
720
710
700
690
680
670
660
650

STA 32+38.56 - BEGIN RAMP B

SPLINE GRADE

VPI 32+38.56
Elev 697.33

-2.83%

-3.36%

VPI 35+42.26
Elev 688.42

STA 35+42.26 - END RAMP B

See I-471 NB for Continuation

701.6 699.9 698.3 697.0 697.01 695.5 695.55 694.0 694.28 692.6 692.89 691.3 691.39 689.8 689.85 688.2

31+00 32+00 33+00 34+00 35+00

LT EDGE OF PAVEMENT
PROFILE GRADE

RAMP B
I-471 NB

SCALE: 1" = 50' HORIZONTAL
1" = 10' VERTICAL

PROFILE

STA 31+00 TO STA 35+00 (RAMP B)

Preliminary Plans

FILE NAME: P:\CIVIL\471\6-2021.00\CONTRACT PLANS AND PROPOSAL\CONTRACT PLAN SET\ROADWAY\R0230PF.DGN
USER: tvonbehren
DATE PLOTTED: January 2, 2012
E-SHEET NAME:
MicroStation v8.11.7.443

COUNTY OF	ITEM NO.	SHEET NO.
CAMPBELL	6-2021.00	R24

RAMP A

P.I. STA. 16+05.34
Δ = 81°54'56" RT
C = 5°02'37"
Ts = 1138.82'
Ls = 300.00'
Lc = 1324.13'
θ = 7°33'56"
L.T. = 200.18'
S.T. = 100.17'
R = 1136.00'
ES = 224.61'
e = 7.1%

REMOVE GUARDRAIL

Rt I-275 Ramp A Sta 7+87 to Lt I-471 SB Sta 83+61 - 1212.5 Lin Ft

CONSTRUCT GUARDRAIL-STEEL W BEAM S-FACE

Rt I-275 Ramp A Sta 7+87 to Lt I-471 SB Sta 83+61 - 1212.5 Lin Ft
w/ 1 - Guardrail End Treatment Type 2A &
1 - Guardrail End Treatment Type 3

CONSTRUCT ISLAND INTEGRAL CURB (JPC ALTERNATE) OR CONSTRUCT ISLAND HEADER CURB TYPE 2 (ASPHALT ALTERNATE)

Rt I-275 Ramp A Sta 4+91 to Lt I-471 SB Sta 75+96 - 102 Lin Ft
Lt I-471 SB Sta 76+18 to Sta 80+83 - 465 Lin Ft

CONSTRUCT FLUME INLET TYPE 2

Lt I-471 SB Sta 76+12 - 1 Each
Lt I-471 SB Sta 80+95 - 1 Each

CAP DROP BOX INLET

Lt I-471 SB Sta 71+31 - 1 Each
Rt I-471 SB Sta 80+32.2 - 1 Each

REMOVE DROP BOX INLET

Lt I-471 SB Sta 73+98 - 1 Each

SAFELOADING

Lt I-471 SB Sta 73+98 - 4 CY

REMOVE CONCRETE MEDIAN BARRIER

Rt I-471 SB Sta 81+00 to Sta 85+00 - 400 Lin Ft

CONSTRUCT CONCRETE MEDIAN BARRIER TYPE 9E2 (ASPHALT ALTERNATE) CONSTRUCT CONCRETE MEDIAN BARRIER TYPE 9B2 (JPC ALTERNATE)

Rt I-471 SB Sta 81+00 to Sta 85+00 - 400 Lin Ft

I-471 NB

S.P.I. STA. 84+47.17
θ = 5°54'04" RT
Ls = 400.00'
L.T. =266.81'
S.T. = 133.47'
e = 5.3%
Runout = 150.94'

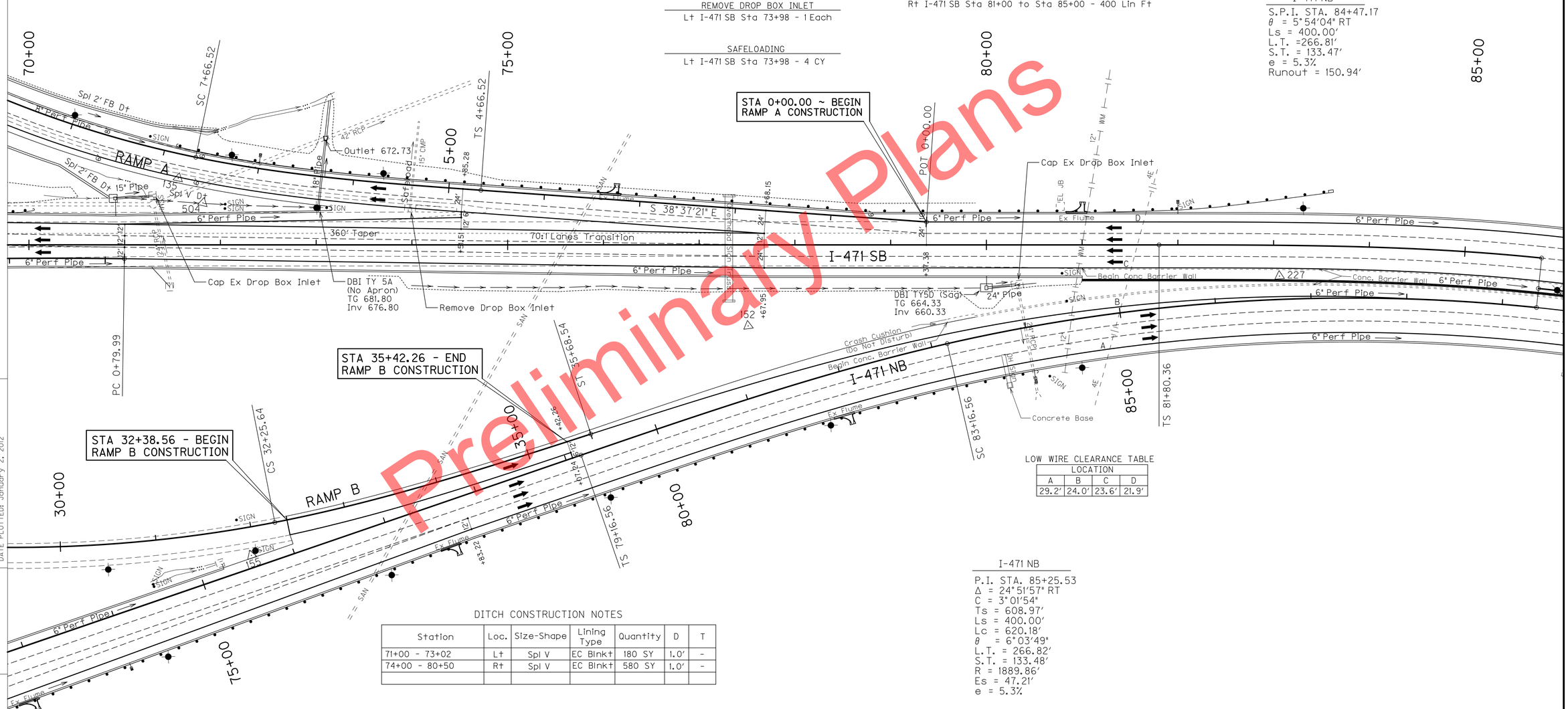

Preliminary Plans

DITCH CONSTRUCTION NOTES

Station	Loc.	Size-Shape	Lining Type	Quantity	D	T
71+00 - 73+02	Lt	Spl V	EC Blnkt	180 SY	1.0'	-
74+00 - 80+50	Rt	Spl V	EC Blnkt	580 SY	1.0'	-

LOW WIRE CLEARANCE TABLE

LOCATION			
A	B	C	D
29.2'	24.0'	23.6'	21.9'

I-471 NB

P.I. STA. 85+25.53
Δ = 24°51'57" RT
C = 3°01'54"
Ts = 608.97'
Ls = 400.00'
Lc = 620.18'
θ = 6°03'49"
L.T. = 266.82'
S.T. = 133.48'
R = 1889.86'
Es = 47.21'
e = 5.3%

SCALE: 1"= 50'

PLAN

I-471 SB STA 70+00 TO STA 85+00

FILE NAME: P:\CIVIL\471N6-2021.00\CONTRACT PLANS AND PROPOSAL\CONTRACT PLAN SET\ROADWAY\R02400PL.DGN
USER: Tvonbehren
DATE PLOTTED: January 2, 2012
E-SHEET NAME:
MicroStation v8.11.7.443

COUNTY OF	ITEM NO.	SHEET NO.
CAMPBELL	6-2021.00	R25

DATUM

ALONG LT EDGE OF PAVEMENT

ALONG RAMP A TAPER

ALONG LT EDGE OF PAVEMENT

I-471 (SB)
LT EDGE OF PAVEMENT

48.6' Lt Sta 70+90 Const Drop Box Inlet Type I

Lt Sta 71+31 Cap Existing Inlet

TG 683.40

Inv 680.40
Const 38' - 15" Pipe

Existing Inlet
TG 685.4
Inv 679.8

Spl V Lt

VPI 74+50.00
Elev 679.84

Spl V Rt

I-471 (SB)
PROFILE GRADE

44.8' Rt Sta 80+00 Const Drop Box Inlet Type SD (Sag)

Sta 80+29.42 End Normal Section & Begin Runout

TG 664.3

Inv 660.3
Const 30' - 24" Pipe

Existing Inlet
TG 663.2
Inv 659.3

Rt Sta 80+32.2 Cap Existing Inlet

PVC 81+35.00
Elev 664.48

Sta 81+80.36 Flat Section Lt
End Runout & Begin Runoff

Sta 83+31.30 Reverse Crown

Elev 660.00
VPI 83+35.00

L 400 FT
SD 946 FT

ALONG RT EDGE OF PAVEMENT

SCALE: 1" = 50' HORIZONTAL
1" = 10' VERTICAL

PROFILE SHEET

I-471 SB STA 70+00 TO STA 85+00

Preliminary Plans

FILE NAME: P:\CIVIL\147IN6-2021.00\CONTRACT PLANS AND PROPOSAL\CONTRACT PLAN SET\ROADWAY\R02560PF.DGN
USER: tvonbehren
DATE PLOTTED: January 2, 2012
E-SHEET NAME:
MicroStation v8.11.7.443

COUNTY OF	ITEM NO.	SHEET NO.
CAMPBELL	6-2021.00	R26

REMOVE CONCRETE MEDIAN BARRIER

Rt I-471 SB Sta 85+00 to Sta 85+80.36 - 80.36 Lin Ft
Lt (Inside) I-471 Sta 89+32.89 to Sta 99+44.89 - 1012 Lin Ft

CONSTRUCT CONCRETE MEDIAN BARRIER TYPE 9E2 (ASPHALT ALTERNATE)
CONSTRUCT CONCRETE MEDIAN BARRIER TYPE 9B2 (JPC ALTERNATE)

Rt I-471 SB Sta 85+00 to Sta 85+80.36 - 80.36 Lin Ft
Lt (Inside) I-471 Sta 89+32.89 to Sta 99+44.89 - 1012 Lin Ft

I-471 NB

S.P.I. STA. 84+47.17
θ = 5°54'04" RT
Ls = 400.00'
L.T. =266.81'
S.T. = 133.47'
e = 5.3%

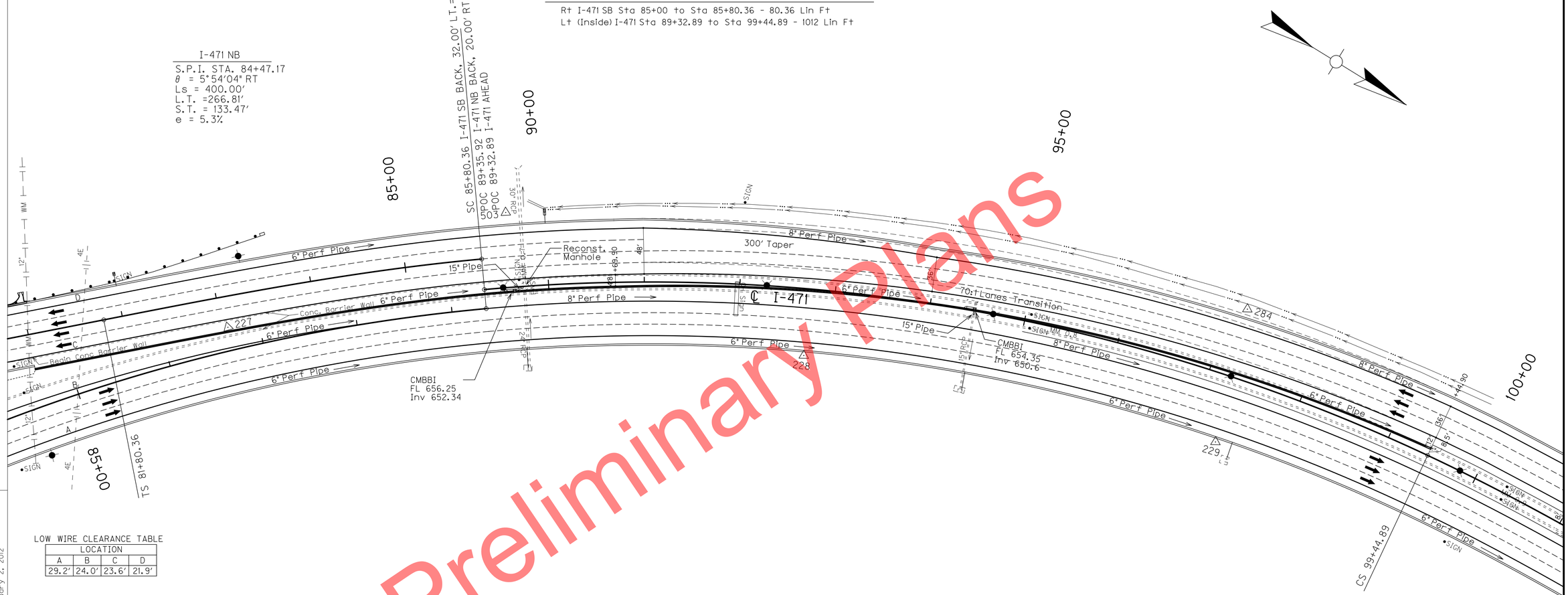

LOW WIRE CLEARANCE TABLE

LOCATION			
A	B	C	D
29.2'	24.0'	23.6'	21.9'

I-471 NB

P.I. STA. 85+25.53
Δ = 24°51'57" RT
C = 3°01'54"
Ts = 608.97'
Ls = 400.00'
Lc = 620.18'
θ = 6°03'49"
L.T. = 266.82'
S.T. = 133.48'
R = 1889.86'
Es = 47.21'
e = 5.3%

I-471

P.I. STA. 95+65.92
Δ = 36°21'46" RT
C = 3°00'00"
Ts = 633.13'
Ls = 400.00'
Lc = 1012.10'
θ = 6° 00'00"
L.T. = 266.82'
S.T. = 133.47'
R = 1909.86'
Es = 102.21'
e = 5.3%
Runout = 150.94'

Preliminary Plans

PLAN

SCALE: 1"= 50'

I-471 NB STA 85+00 TO STA 89+35.95
I-471 SB STA 85+00 TO STA 85+80.36
I-471 STA 89+32.89 TO STA 100+00

FILE NAME: P:\CIVIL\I471\6-2021.00\CONTRACT PLANS AND PROPOSAL\CONTRACT PLAN SET\ROADWAY\R02600PL.DGN
USER: tvonbehren
DATE PLOTTED: January 2, 2012
E-SHEET NAME:
MicroStation v8.11.7.443

COUNTY OF	ITEM NO.	SHEET NO.
CAMPBELL	6-2021.00	R27

DATUM 700 690 680 670 660 650 640 630 620 610

Sta 89+35.83
Sta 89+32.79

I-471 (NB)
RT EDGE OF PAVEMENT

664.2 664.38 | 662.8 662.79 | 661.4 661.37 | 660.2 660.11 | 659.2 659.02 | 658.2 658.10 | 657.4 657.34 | 656.7 656.74 | 656.3 656.31 | 656.1 656.02 | 655.8 655.79 | 655.6 655.57 | 655.4 655.35 | 655.2 655.11 | 654.9 654.88 | 654.7 654.64 | 654.5 654.40 | 654.2 654.16 | 654.0 653.93 | 653.8 653.71 | 653.6 653.50 | 653.4 653.28 | 653.3 653.07 | 653.0 652.86 | 652.8 652.65 | 652.5 652.45 | 652.3 652.25 | 652.0 652.05 | 651.8 651.84 | 651.8 651.64 | 651.6 651.65

85+00 86+00 87+00 88+00 89+00 90+00 91+00 92+00 93+00 94+00 95+00 96+00 97+00 98+00 99+00 100+00

ALONG RAMP B TAPER

L 475 FT
SD 677 FT

VPI 86+75.00
Elev 659.58

PVT 89+12.50
Elev 658.14

Sta 89+35.83
Elev 658.00
VPI 89+32.79
Elev 658.00

VPI 91+00.00
Elev 657.29

VPI 92+50.00
Elev 656.63

VPI 94+00.00
Elev 656.03

VPI 96+50.00
Elev 654.82

VPI 99+00.00
Elev 653.81

Sta 99+44.89 End Full Superelevation (e = 5.3%) & Begin Runout

-0.61% -0.42% -0.45% -0.40% -0.48% -0.40% -0.46%

ALONG RAMP B TAPER

I-471 (NB)
PROFILE GRADE

SCALE: 1" = 50' HORIZONTAL
1" = 10' VERTICAL

666.6 666.62 | 664.9 664.98 | 663.5 663.50 | 662.1 662.20 | 661.0 661.05 | 660.1 660.07 | 659.3 659.24

666.3 666.29 | 664.7 664.70 | 663.3 663.28 | 662.0 662.02 | 660.9 660.93 | 660.0 660.00 | 659.2 659.24 | 658.7 658.65 | 658.2 658.22 | 658.0 658.00 | 657.9 657.93 | 657.7 657.72 | 657.5 657.51 | 657.3 657.29 | 657.1 657.07 | 656.8 656.85 | 656.6 656.63 | 656.3 656.43 | 656.1 656.23 | 655.8 656.03 | 655.7 655.79 | 655.5 655.55 | 655.3 655.30 | 655.0 655.06 | 654.8 654.82 | 654.5 654.62

654.3 654.42 | 654.1 654.21 | 654.0 654.01 | 653.8 653.81 | 653.6 653.58 | 653.3 653.35

85+00 86+00 87+00 88+00 89+00 90+00 91+00 92+00 93+00 94+00 95+00 96+00 97+00 98+00 99+00 100+00

PROFILE SHEET

I-471 NB STA 85+00 TO STA 100+00

Preliminary Plans

FILE NAME: P:\CIVIL\471N6-2021.00\CONTRACT PLANS AND PROPOSAL\CONTRACT PLAN SET\ROADWAY\R0270PF.DGN
USER: tvonbehren
DATE PLOTTED: January 2, 2012
E-SHEET NAME:
MicroStation v8.11.7.443

COUNTY OF	ITEM NO.	SHEET NO.
CAMPBELL	6-2021.00	R28

DATUM

680 670 660 650 640 630 620 610 600

Sta 85+80.26
Elev 659.84

Sta 89+32.79
Elev 659.84

I-471 (SB)
LT EDGE OF PAVEMENT

660.1 660.08 | 660.0 659.92 | 659.8 659.79 | 659.5 659.64 | 659.3 659.44 | 659.1 659.22 | 658.9 658.91 | 658.6 658.59 | 658.3 658.28 | 658.0 657.97 | 657.7 657.65 | 657.4 657.34 | 657.2 657.18 | 657.0 657.03 | 656.9 656.87 | 656.6 656.71 | 656.5 656.55 | 656.3 656.40 | 656.2 656.24 | 656.0 656.09 | 655.8 655.94 | 655.7 655.68 | 655.5 655.41 | 655.0 654.91

85+00 85+80 89+33 90+00 91+00 92+00 93+00 94+00 95+00 96+00 97+00 98+00 99+00 100+00

Preliminary Plans

Sta 85+80.26
Elev 657.30

VPI 89+32.79
Elev 657.30

VPI 90+00.00
Elev 657.08

VPI 91+00.00
Elev 656.68

VPI 92+00.00
Elev 656.29

VPI 94+00.00
Elev 655.52

VPI 96+50.00
Elev 654.72

VPI 98+50.00
Elev 654.13

-0.58%
-0.32%
-0.40%
-0.40%
-0.38%
-0.32%
-0.30%
-0.50%

PVT 85+35.00
Elev 658.83

Sta 85+80.36 End Runoff & Begin Full Superelevation (e = 5.3%)

FL 656.25
Inv 652.34

Ex Manhole
LID 660.4

LID 656.75

Ex 30" Pipe (Invert Not Located)
Const 9' - 15" Pipe

4' Rt Sta 89+64.3 Const Concrete Median Barrier Box Inlet Type 9B1

0.3' Lt Sta 89+74.3 Reconstruct Manhole (Top Phase) w/ Frame & Lid Type 2

8' Lt Sta 89+74.3 Remove Existing Inlet

I-471 (SB)
PROFILE GRADE

FL 654.35
Inv 650.6

1.39' Lt Sta 94+46.5 Const Concrete Median Barrier Box Inlet Type 9B1 w/ 4' - 15" Pipe

8' Lt Sta 94+46.5 Remove Existing Inlet

SCALE: 1" = 50' HORIZONTAL
1" = 10' VERTICAL

658.0 658.05 | 657.5 657.57

ALONG RT EDGE OF PAVEMENT

659.1 659.06 | 658.8 658.75 | 657.2 657.24 | 657.1 657.08 | 656.8 656.88 | 656.7 656.68 | 656.5 656.48 | 656.3 656.29 | 656.1 656.10 | 655.9 655.90 | 655.7 655.71 | 655.4 655.52 | 655.3 655.36 | 655.1 655.20 | 655.0 655.04 | 654.8 654.88 | 654.6 654.72 | 654.5 654.58 | 654.4 654.43

85+00 90+00 91+00 92+00 93+00 94+00 95+00 96+00 97+00

654.3 654.28 | 654.0 654.13 | 653.9 653.88 | 653.6 653.63 | 653.3 653.38

98+00 99+00 100+00

PROFILE SHEET

I-471 SB STA 85+00 TO STA 100+00

FILE NAME: P:\CIVIL\147N6-2021.00\CONTRACT PLANS AND PROPOSAL\CONTRACT PLAN SET\ROADWAY\R02800PF.DGN
USER: tvonbehren
DATE PLOTTED: January 2, 2012
E-SHEET NAME:
MicroStation v8.11.7.443

COUNTY OF	ITEM NO.	SHEET NO.
CAMPBELL	6-2021.00	R29

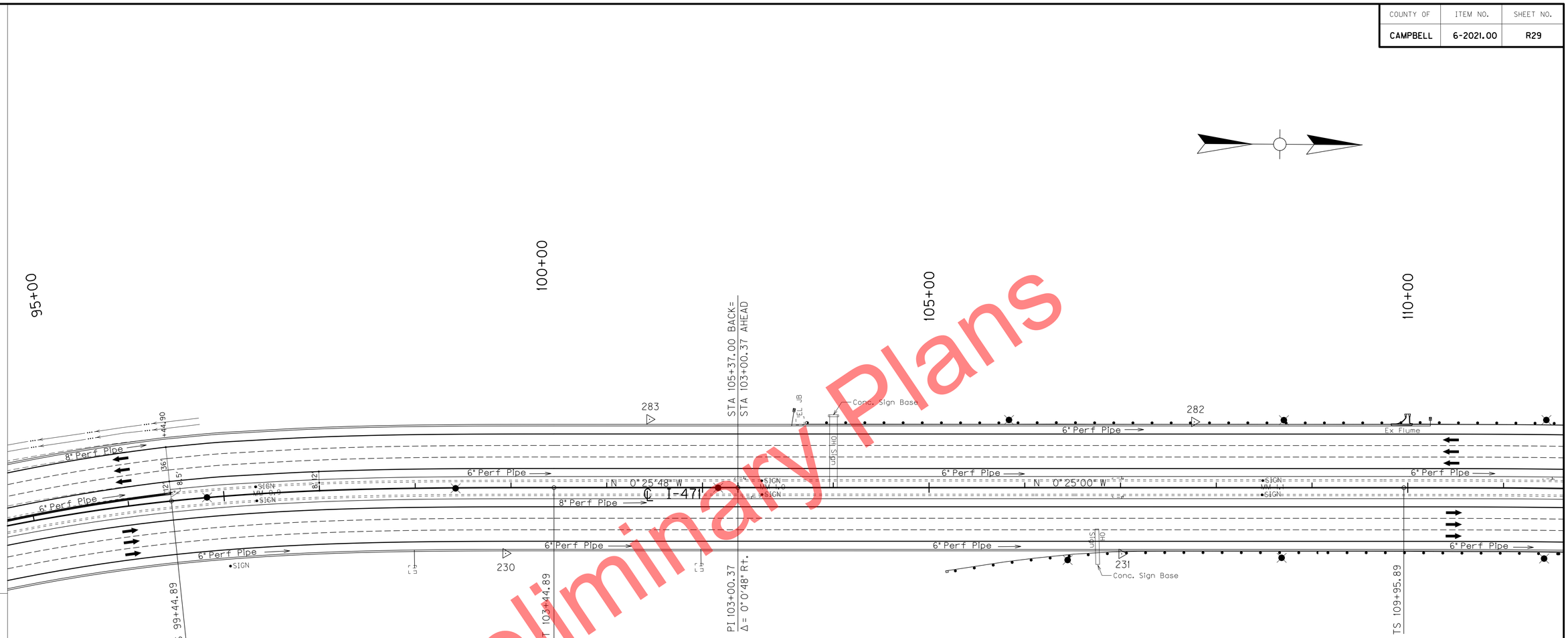

Preliminary Plans

I-471

P.I. STA. 95+65.92
Δ = 36°21'46" RT
C = 3°00'00"
Ts = 633.13'
Ls = 400.00'
Lc = 1012.10'
θ = 6° 00'00"
L.T. = 266.82'
S.T. = 133.47'
R = 1909.86'
Es = 102.21'
e = 5.3%
Runout = 150.94'

REMOVE GUARDRAIL

Lt (Outside) I-471 Sta 103+72 to Sta 110+00 - 628 Lin Ft
Rt (Outside) I-471 Sta 105+17 to Sta 110+00 - 484.5 Lin Ft

CONSTRUCT GUARDRAIL-STEEL W BEAM S-FACE

Lt (Outside) I-471 Sta 103+72 to Sta 110+00 - 628 Lin Ft
w/ 1 - Guardrail End Treatment Type 2A

Rt (Outside) I-471 Sta 105+17 to Sta 110+00 - 484.5 Lin Ft
w/ 1 - Guardrail End Treatment Type 3

CONSTRUCT ISLAND INTEGRAL CURB (JPC ALTERNATE) OR
CONSTRUCT ISLAND HEADER CURB TYPE 2 (ASPHALT ALTERNATE)

Lt (Outside) I-471 Sta 106+49 to Sta 109+82 - 333 Lin Ft
Rt (Outside) I-471 Sta 107+50 to Sta 110+00 - 250 Lin Ft

CONSTRUCT FLUME INLET TYPE 2

Lt (Outside) I-471 Sta 109+93 - 1 Each

SCALE: 1"= 50'

PLAN

I-471 STA 100+00 TO STA 110+00

FILE NAME: P:\CIVIL\147\N6-2021.00\CONTRACT PLANS AND PROPOSAL\CONTRACT PLAN SET\ROADWAY\R02900PL.DGN
USER: tvonbehren
DATE PLOTTED: January 2, 2012
E-SHEET NAME:
MicroStation v8.11.7.443

COUNTY OF	ITEM NO.	SHEET NO.
CAMPBELL	6-2021.00	R30

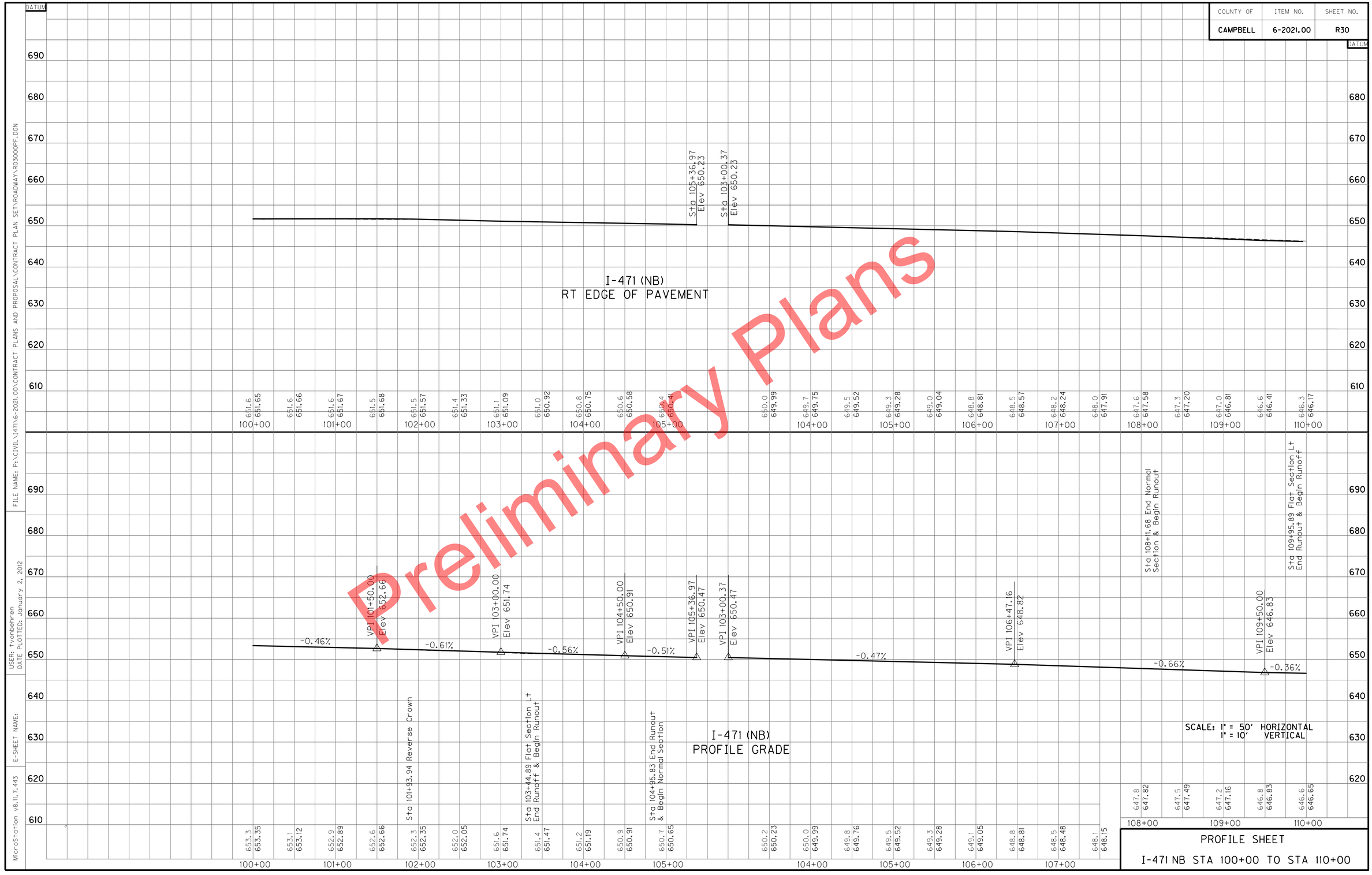

Preliminary Plans

PROFILE SHEET

I-471 NB STA 100+00 TO STA 110+00

FILE NAME: P:\CIVIL\147IN6-2021.00\CONTRACT PLANS AND PROPOSAL\CONTRACT PLAN SET\ROADWAY\R03000PF.DGN
USER: tvonbehren
DATE PLOTTED: January 2, 2012
E-SHEET NAME:
MicroStation v8.11.7.443

COUNTY OF	ITEM NO.	SHEET NO.
CAMPBELL	6-2021.00	R31

Preliminary Plans

Sta 105+37.00
Elev 650.35

Sta 103+00.37
Elev 650.35

I-471 (SB)
LT EDGE OF PAVEMENT

655.0 654.91 | 654.5 654.42 | 653.9 653.93 | 653.4 653.44 | 653.0 652.97 | 652.5 652.56 | 652.0 652.16 | 651.6 651.76 | 651.2 651.36 | 651.0 650.96 | 650.6 650.55 | 650.4 | 650.4 650.35 | 650.1 650.10 | 649.8 649.86 | 649.6 649.61 | 649.3 649.36 | 649.1 649.12 | 648.8 648.87 | 648.6 648.55 | 648.3 648.23 | 647.9 647.91 | 647.6 647.59 | 647.4 647.37 | 647.1 647.19 | 646.8 647.05 | 646.6 646.96

100+00 101+00 102+00 103+00 104+00 105+00 103+00 104+00 105+00 106+00 107+00 108+00 109+00 110+00

-0.50% -0.47% -0.72% -0.49% -0.64%

VPI 101+50.00
Elev 652.64

VPI 104+50.00
Elev 651.22

VPI 105+37.00
Elev 650.59

VPI 103+00.37
Elev 650.59

VPI 106+00.00
Elev 649.11

PVC 108+75.00
Elev 647.35

VPI 109+50.00
Elev 646.87

L = 150 FT
SD 1876 FT

Sta 108+11.68 End Normal Section & Begin Runout

Sta 109+95.89 Flat Section Lt End Runout & Begin Runoff

Sta 101+93.94 Reverse Crown

Sta 103+44.89 Flat Section Lt End Runoff & Begin Runout

Sta 104+95.83 End Runout & Begin Normal Section

653.3 653.38 | 653.0 653.14 | 652.7 652.89 | 652.5 652.64 | 652.3 652.40 | 652.0 652.16 | 651.7 651.93 | 651.6 651.69 | 651.4 651.45 | 651.1 651.22 | 650.8 650.86 | 650.59 | 650.4 650.34 | 650.1 650.10 | 649.8 649.85 | 649.6 649.60 | 649.4 649.36 | 649.1 649.11 | 648.8 648.79 | 648.5 648.47 | 648.1 648.15

100+00 101+00 102+00 103+00 104+00 105+00 103+00 104+00 105+00 106+00 107+00

I-471 (SB)
PROFILE GRADE

SCALE: 1" = 50' HORIZONTAL
1" = 10' VERTICAL

647.8 647.83 | 647.5 647.51 | 647.2 647.20 | 646.9 646.93 | 646.6 646.71

108+00 109+00 110+00

PROFILE SHEET

I-471 SB STA 100+00 TO STA 110+00

DATUM 690 680 670 660 650 640 630 620 610

FILE NAME: P:\CIVIL\147IN6-2021.00\CONTRACT PLANS AND PROPOSAL\CONTRACT PLAN SET\ROADWAY\R0310OPF.DGN
USER: tvonbehren
DATE PLOTTED: January 2, 2012
E-SHEET NAME:
MicroStation v8.11.7.443

COUNTY OF	ITEM NO.	SHEET NO.
CAMPBELL	6-2021.00	R32

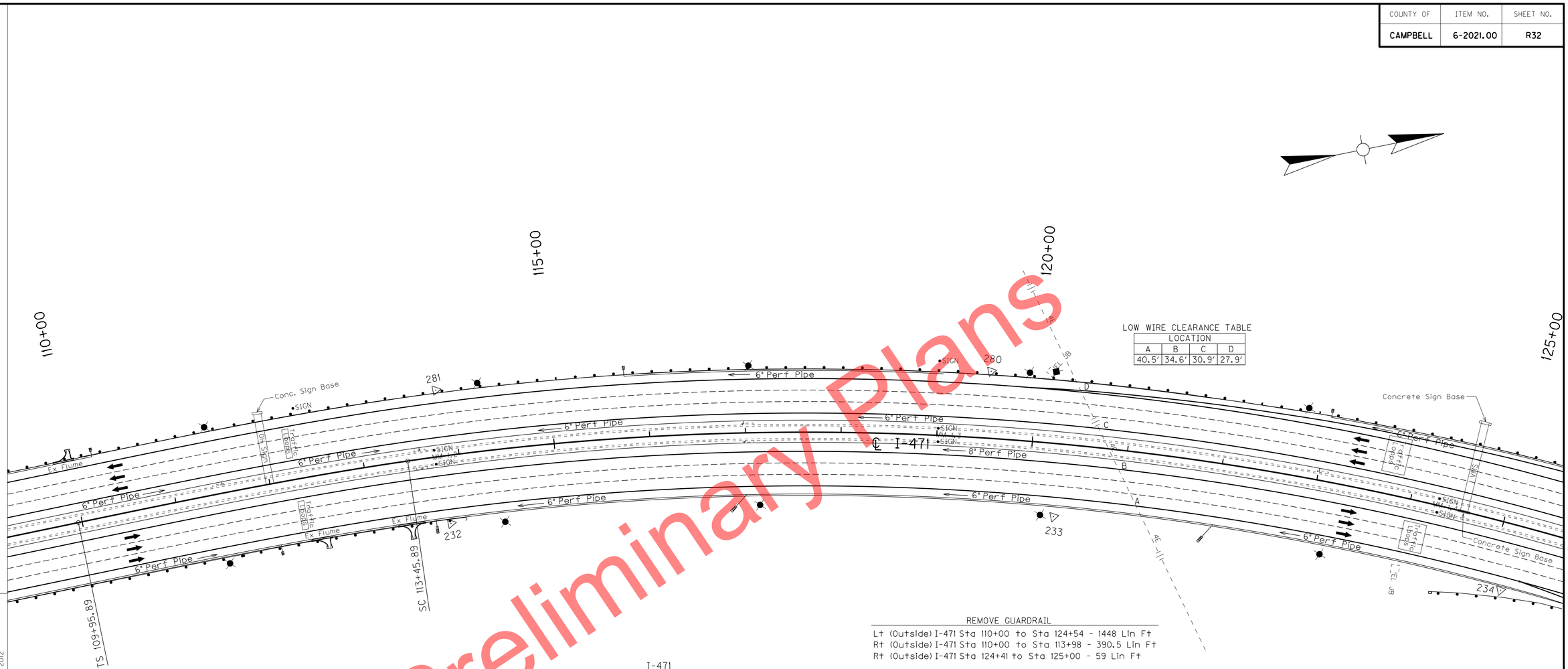

LOW WIRE CLEARANCE TABLE

LOCATION			
A	B	C	D
40.5′	34.6′	30.9′	27.9′

I-471

P.I. STA. 119+86.52
Δ = 31°30'12" RT
C = 1°58'57"
Ts = 990.63′
Ls = 350.00′
Lc = 1239.03′
θ = 3°28'10"
L.T. = 233.38′
S.T. = 116.71′
R = 2890.00′
Es = 114.60′
e = 3.8%
Runout = 184.21′

REMOVE GUARDRAIL

Lt (Outside) I-471 Sta 110+00 to Sta 124+54 - 1448 Lin Ft
Rt (Outside) I-471 Sta 110+00 to Sta 113+98 - 390.5 Lin Ft
Rt (Outside) I-471 Sta 124+41 to Sta 125+00 - 59 Lin Ft

CONSTRUCT GUARDRAIL-STEEL W BEAM S-FACE

Lt (Outside) I-471 Sta 110+00 to Sta 125+00 - 1525 Lin Ft

Rt (Outside) I-471 Sta 110+00 to Sta 113+98 - 390.5 Lin Ft w/ 1 - Guardrail End Treatment Type 2A

Rt (Outside) I-471 Sta 124+41 to Sta 125+00 - 59 Lin Ft w/ 1 - Guardrail End Treatment Type 3

CONSTRUCT ISLAND INTEGRAL CURB (JPC ALTERNATE) OR CONSTRUCT ISLAND HEADER CURB TYPE 2 (ASPHALT ALTERNATE)

Rt (Outside) I-471 Sta 110+00 to Sta 112+31 - 231 Lin Ft
Rt (Outside) I-471 Sta 112+54 to Sta 113+27 - 73 Lin Ft
Rt (Outside) I-471 Sta 113+53 to Sta 113+68 - 15 Lin Ft

CONSTRUCT FLUME INLET TYPE 2

Rt (Outside) I-471 Sta 112+43 - 1 Each

CONSTRUCT FLUME INLET TYPE 1

Rt (Outside) I-471 Sta 113+40 - 1 Each

Preliminary Plans

SCALE: 1"= 50′

PLAN

I-471 STA 110+00 TO STA 125+00

FILE NAME: P:\CIVIL\147\N6-2021.00\CONTRACT PLANS AND PROPOSAL\CONTRACT PLAN SET\ROADWAY\R0320OPL.DGN
USER: tvonbehren
DATE PLOTTED: January 2, 2012
E-SHEET NAME:
MicroStation v8.11.7.443

COUNTY OF	ITEM NO.	SHEET NO.
CAMPBELL	6-2021.00	R33

Preliminary Plans

I-471 (NB)
RT EDGE OF PAVEMENT

I-471 (NB)
PROFILE GRADE

VPI 111+50.00 Elev 646.11
Sta 111+80.10 Reverse Crown
PVC 112+57.00 Elev 645.52
VPI 113+32.00 Elev 645.10
L 150 FT
SD 521 FT
Sta 113+45.89 End Runoff & Begin Full Superelevation (e = 3.8%)
PVT 114+07.00 Elev 645.60
VPI 116+00.00 Elev 646.90
VPI 116+50.00 Elev 647.49
VPI 117+00.00 Elev 648.17
VPI 117+50.00 Elev 649.00
VPI 118+50.00 Elev 650.93
VPI 119+50.00 Elev 653.25
VPI 120+50.00 Elev 656.04
VPI 123+50.00 Elev 665.12

-0.36% -0.56% 0.67% 1.18% 1.36% 1.67% 1.93% 2.31% 2.79% 3.03% 2.99%

SCALE: 1" = 50' HORIZONTAL
1" = 10' VERTICAL

PROFILE SHEET

I-471 NB STA 110+00 TO STA 125+00

FILE NAME: P:\CIVIL\147IN6-2021.00\CONTRACT PLANS AND PROPOSAL\CONTRACT PLAN SET\ROADWAY\R033GOPF.DGN
USER: tvonbehren
DATE PLOTTED: January 2, 2012
E-SHEET NAME:
MicroStation v8.11.7.443

COUNTY OF	ITEM NO.	SHEET NO.
CAMPBELL	6-2021.00	R34

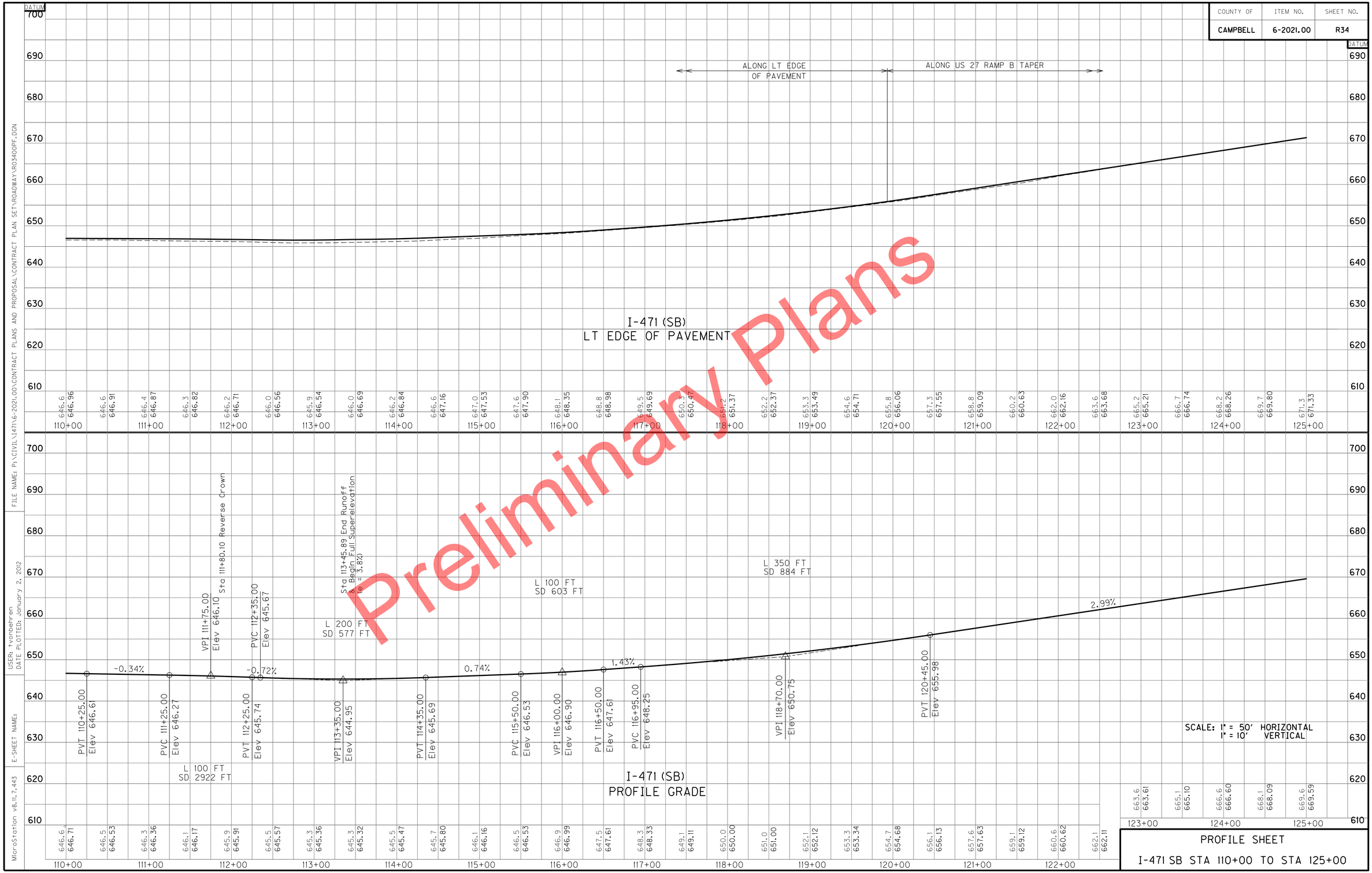

Preliminary Plans

PROFILE SHEET

I-471 SB STA 110+00 TO STA 125+00

FILE NAME: P:\CIVIL\I471\6-2021.00\CONTRACT PLANS AND PROPOSAL\CONTRACT PLAN SET\ROADWAY\R03400PF.DGN

USER: tvonbehren
DATE PLOTTED: January 2, 2012

E-SHEET NAME:

MicroStation v8.11.7.443

COUNTY OF	ITEM NO.	SHEET NO.
CAMPBELL	6-2021.00	R35

Preliminary Plans

STA 25+54.14 - END US 27 RAMP D CONSTRUCTION

STA 9+91.42 - Begin US 27 Ramp C

US 27 RAMP D
P.I. STA. 22+43.80
Δ = 26°07'36" RT
C = 8°00'00"
T = 166.18'
L = 326.58'
R = 716.20'
E = 19.03'
e = 6.2%

US 27 RAMP D
P.I. STA. 14+70.66
Δ = 41°11'04" LT
C = 8°00'00"
T = 269.09'
L = 514.81'
R = 716.20'
E = 48.88'
e = 5.2%

US 27 RAMP C
P.I. STA. 13+76.64
Δ = 27°17'44" RT
C = 6°00'00"
T = 231.86'
L = 454.93'
R = 954.93'
E = 27.75'
e = 5.2%

I-471
P.I. STA. 119+86.52
Δ = 31°30'12" RT
C = 1°58'57"
Ts = 990.63'
Ls = 350.00'
Lc = 1239.03'
θ = 3°28'10"
L.T. = 233.38'
S.T. = 116.71'
R = 2890.00'
Es = 114.60'
e = 3.8%
Runout = 184.21'

LOW WIRE CLEARANCE TABLE

LOCATION					
A	B	C	D	E	F
102.4'	96.7'	94.3'	90.6'	89.8'	90.9'

REMOVE GUARDRAIL

Lt (Outside) I-471 Sta 135+01 to Sta 140+27 - 525 Lin Ft
Rt (Outside) I-471 Sta 125+00 to Sta 127+66 - 266 Lin Ft
Rt (Outside) I-471 Sta 134+89 to Sta 139+43 - 454 Lin Ft
Rt US 27 Ramp D Sta 14+00 to Sta 18+99 - 501 Lin Ft

CONSTRUCT GUARDRAIL-STEEL W BEAM S-FACE

Lt (Outside) I-471 Sta 125+00 to Sta 126+66 - 134.5 Lin Ft
w/ 1 - Guardrail End Treatment Type 4A

Lt (Outside) I-471 Sta 135+01 to Sta 140+27 - 525 Lin Ft
w/ 1 - Guardrail End Treatment Type 2A &
1 - Guardrail Connector to Bridge End Type A-1

Rt (Outside) I-471 Sta 125+00 to Sta 127+66 - 266 Lin Ft
w/ 1 - Guardrail End Treatment Type 2A

Rt (Outside) I-471 Sta 134+93 to Sta 139+43 - 412.5 Lin Ft
w/ 1 - Guardrail End Treatment Type 4A &
1 - Guardrail Connector to Bridge End Type A

Rt US 27 Ramp D Sta 14+00 to Sta 18+99 - 501 Lin Ft
w/ 1 - Guardrail End Treatment Type 2A

CONSTRUCT ISLAND INTEGRAL CURB (JPC ALTERNATE) OR
CONSTRUCT ISLAND CURB & GUTTER (ASPHALT ALTERNATE)

Rt (Outside) I-471 Sta 139+23 to Sta 139+31 - 8 Lin Ft

PLAN
I-471 STA 125+00 TO STA 140+00
SCALE: 1"= 50'

FILE NAME: P:\CIVIL\147\N6-2021.00\CONTRACT PLANS AND PROPOSAL\CONTRACT PLAN SET\ROADWAY\R03560PL.DGN
USER: tvonbehren
DATE PLOTTED: January 2, 2012
E-SHEET NAME:
MicroStation v8.11.7.443

COUNTY OF	ITEM NO.	SHEET NO.
CAMPBELL	6-2021.00	R36

ALONG US 27 RAMP C TAPER

ALONG RT EDGE OF PAVEMENT

EXIST BRIDGE

MATCH EXIST BRIDGE

I-471 (NB)
RT EDGE OF PAVEMENT

Sta 125+84.91 End Full Superelevation
e = 3.8% & Begin Runoff

Sta 127+50.70 Reverse Crown

Sta 129+34.91 Flat Section L+
End Runoff & Begin Runout

Sta 131+19.13 End Runout
& Begin Normal Section

VPI 133+50.00
Elev 695.06

2.89%

PVC 135+40.00
Elev 700.56

L 100 FT
SD 1330 FT

VPI 135+90.00
Elev 702.00

2.05%

PVT 136+40.00
Elev 703.03

PVC 137+50.00
Elev 705.28

L 100 FT
SD 1015 FT

VPI 138+00.00
Elev 706.30

2.43%

PVT 138+50.00
Elev 707.52

VPI 139+75.02
Elev 710.56

2.09%

EXIST BRIDGE

MATCH EXIST BRIDGE

2.99%

SCALE: 1" = 50' HORIZONTAL
1" = 10' VERTICAL

I-471 (NB)
PROFILE GRADE

PROFILE SHEET

I-471 NB STA 125+00 TO STA 140+00

Preliminary Plans

FILE NAME: P:\CIVIL\147IN6-2021.00\CONTRACT PLANS AND PROPOSAL\CONTRACT PLAN SET\ROADWAY\R0360OPF.DGN
USER: tvonbehren
DATE PLOTTED: January 2, 2012
E-SHEET NAME:
MicroStation v8.11.7.443

COUNTY OF	ITEM NO.	SHEET NO.
CAMPBELL	6-2021.00	R37

ALONG US 27 RAMP B TAPER

ALONG LT EDGE OF PAVEMENT

I-471 (SB)
LT EDGE OF PAVEMENT

Sta 125+84.91 End Full Superelevation
e = 3.8% & Begin Runoff

Sta 127+50.70 Reverse Crown

Sta 129+34.91 Flat Section Lt
End Runoff & Begin Runout

Sta 131+19.13 End Runout
& Begin Normal Section

VPI 134+75.00
Elev 698.75

2.76%

PVC 135+58.00
Elev 701.04

VPI 136+08.00
Elev 702.42

SD 1379 FT
L 100 FT

1.95%

PVT 136+58.00
Elev 703.39

PVC 137+10.00
Elev 704.41

VPI 137+60.00
Elev 705.38

100 FT
SD 843 FT

PVT 138+10.00
Elev 706.59

2.42%

2.99%

SCALE: 1" = 50' HORIZONTAL
1" = 10' VERTICAL

I-471 (SB)
PROFILE GRADE

PROFILE SHEET

I-471 SB STA 125+00 TO STA 140+00

Preliminary Plans

FILE NAME: P:\CIVIL\147IN6-2021.00\CONTRACT PLANS AND PROPOSAL\CONTRACT PLAN SET\ROADWAY\R037OOPF.DGN
USER: tvonbehren
DATE PLOTTED: January 2, 2012
E-SHEET NAME:
MicroStation v8.11.7.443

COUNTY OF	ITEM NO.	SHEET NO.
CAMPBELL	6-2021.00	R38

Preliminary Plans

STA 10+36.00 - BEGIN
US 27 RAMP D CONSTRUCTION

US 27 RAMP D
P.I. STA. 14+70.66
Δ = 41°11'04" LT
C = 8°00'00"
T = 269.09'
L = 514.81'
R = 716.20'
E = 48.88'
e = 5.2%

US 27 RAMP A
P.I. STA. 17+69.53
Δ = 51°28'56" RT
C = 4°30'00"
T = 613.90'
L = 1144.06'
R = 1273.24'(2)
E = 140.27'
e = 4.4%

STA 26+72.38 - END
US 27 RAMP A CONSTRUCTION

STA 10+37.80 - BEGIN
US 27 RAMP B CONSTRUCTION

US 27 RAMP B
P.I. STA. 25+73.52
Δ = 6°35'21" LT
C = 2°00'00"
T = 164.91'
L = 329.46'
R = 2864.79'
E = 4.74'
e = 2.1%

LOW WIRE CLEARANCE TABLE

LOCATION					
A	B	C	D	E	F
33.3'	27.4'	27.5'	26.8'	29.3'	48.7'

LOW WIRE CLEARANCE TABLE

LOCATION			
G	H	I	J
27.4'	25.4'	26.5'	24.3'

REMOVE GUARDRAIL

Lt (Outside) I-471 Sta 143+87 to Sta 146+90 - 303.5 Lin Ft
Rt (Outside) I-471 Sta 143+01 to Sta 148+16 - 516 Lin Ft
Rt US 27 Ramp B Sta 24+01 to Rt (Outside) I-471 Sta 155+00 - 232.5 Lin Ft
Lt US 27 Ramp B Sta 10+91 to Sta 11+61 - 87.5 Lin Ft
Rt US 27 Ramp D Sta 10+07 to Sta 14+00 - 474 Lin Ft

CONSTRUCT GUARDRAIL-STEEL W BEAM S-FACE

Lt (Outside) I-471 Sta 143+87 to Sta 146+87 - 262.5 Lin Ft
w/ 1 - Guardrail Connector to Bridge End Type A &
1 - Guardrail End Treatment Type 4A

Rt (Outside) I-471 Sta 143+01 to Sta 148+14 - 512.5 Lin Ft
w/ 1 - Guardrail Connector to Bridge End Type A-1 &
1 - Guardrail End Treatment Type 2A

Rt US 27 Ramp B Sta 24+01 to Rt (Outside) I-471 Sta 155+00 - 195.3 Lin Ft
w/ 1 - Guardrail End Treatment Type 4A

Lt US 27 Ramp B Sta 10+91 to Sta 11+61 - 87.5 Lin Ft
w/ 1 - Connect To Existing Guardrail &
1 - Guardrail End Treatment Type 2A

Rt US 27 Ramp D Sta 10+07 to Sta 14+00 - 474 Lin Ft
w/ 1 - Connect To Existing Guardrail

CONSTRUCT ISLAND INTEGRAL CURB (JPC ALTERNATE) OR
CONSTRUCT ISLAND CURB & GUTTER (ASPHALT ALTERNATE)

Lt (Outside) I-471 Sta 143+87 to Sta 144+12 - 25 Lin Ft

SCALE: 1"= 50'

PLAN

I-471 STA 140+00 TO STA 155+00

FILE NAME: P:\CIVIL\147\N6-2021.00\CONTRACT PLANS AND PROPOSAL\CONTRACT PLAN SET\ROADWAY\R0380PL.DGN
USER: tvonbehren
DATE PLOTTED: January 2, 2012
E-SHEET NAME:
MicroStation v8.11.7.443

COUNTY OF	ITEM NO.	SHEET NO.
CAMPBELL	6-2021.00	R39

DATUM

750 740 730 720 710 700 690 680

EXIST BRIDGE

MATCH EXIST BRIDGE

I-471 (NB)
RT EDGE OF PAVEMENT

140+00	141+00	142+00	143+00	144+00	145+00	146+00	147+00	148+00	149+00	150+00	151+00	152+00	153+00	154+00	155+00
710.9 710.84	711.9 711.89	713.0 712.93	714.0 713.98	715.0 715.03	716.1 716.07	717.1 717.12	718.2 718.17	719.3 719.22	720.3 720.25	721.3 721.26	722.3 722.33	723.3 723.41	724.4 724.48	725.5 725.56	726.6 726.69	727.7 727.82	728.9 728.96	730.1 730.13	731.3 731.36	732.5 732.60	733.7 733.83	735.0 735.06	736.3 736.43	737.7 737.79	739.1 739.22	740.5 740.65	741.8 742.05	743.2 743.54	744.8 745.10	746.4 746.68

Preliminary Plans

750 740 730 720 710 700 690

2.09%

EXIST BRIDGE

MATCH EXIST BRIDGE

VPI 143+29.12
Elev 717.97

2.11%

PVC 144+00.00
Elev 719.46

L 100 FT
SD 5116 FT

VPI 144+50.00
Elev 720.52

Sta 144+88.32 End Normal Section & Begin Runout

PVT 145+00.00
Elev 721.47

1.90%

Sta 146+78.80 Flat Section R+
End Runout & Begin Runoff

VPI 147+00.00
Elev 725.27

2.01%

Sta 148+69.28 Reverse Crown

VPI 149+00.00
Elev 729.29

2.09%

VPI 151+00.00
Elev 733.47

2.35%

PVC 151+85.00
Elev 735.47

L 250 FT
SD 1172 FT

Sta 152+78.80 End Runoff & Begin Full Superelevation (e = 6.3%)

VPI 153+10.00
Elev 738.40

3.17%

PVT 154+35.00
Elev 742.36

I-471 (NB)
PROFILE GRADE

SCALE: 1" = 50' HORIZONTAL
1" = 10' VERTICAL

140+00	141+00	142+00	143+00	144+00	145+00	146+00	147+00	148+00	149+00	150+00	151+00	152+00	153+00	154+00	155+00
711.1 711.08	712.1 712.13	713.2 713.17	714.2 714.22	715.3 715.27	716.3 716.31	717.3 717.36	718.4 718.41	719.5 719.46	720.5 720.49	721.4 721.47	722.1 722.42	722.9 723.37	724.1 724.32	725.3 725.27	726.2 726.27	727.2 727.28	728.3 728.29	729.3 729.29	730.3 730.34	731.4 731.38	732.4 732.43	733.5 733.47	734.6 734.64	735.8 735.82	737.0 737.06	738.4 738.38	739.7 739.79	741.2 741.27	742.8 742.83	744.4 744.42

PROFILE SHEET

I-471 NB STA 140+00 TO STA 155+00

FILE NAME: P:\CIVIL\147N6-2021.00\CONTRACT PLANS AND PROPOSAL\CONTRACT PLAN SET\ROADWAY\R0390OPF.DGN
USER: tvonbehren
DATE PLOTTED: January 2, 2012
E-SHEET NAME:
MicroStation v8.11.7.443

COUNTY OF	ITEM NO.	SHEET NO.
CAMPBELL	6-2021.00	R40

DATUM 750 740 730 720 710 700 690 680 670 660

EXIST BRIDGE

MATCH EXIST BRIDGE

MATCH EXIST BRIDGE

I-471 (SB)
LT EDGE OF PAVEMENT

140+00	141+00	142+00	143+00	144+00	145+00	146+00	147+00	148+00	149+00	150+00	151+00	152+00	153+00	154+00	155+00
710.6 710.95	711.9 711.98	713.0 713.01	714.1 714.04	715.1 715.07	716.1 716.10	717.1 717.13	718.1 718.15	719.0 719.16	719.9 720.08	720.7 720.94	721.7 721.78	722.7 722.71	723.7 723.68	724.8 724.65	725.7 725.61	726.6 726.58	727.7 727.53	728.5 728.39	729.2 729.19	729.8 729.99	730.7 730.77	731.6 731.64	732.6 732.62	733.5 733.63	734.6 734.63	735.9 735.72	737.3 737.01	738.7 738.42	740.2 739.95	741.7 741.48

Preliminary Plans

VPI 140+00.50
Elev 711.20
2.42%

2.06%

EXIST BRIDGE

MATCH EXIST BRIDGE

PVC 143+60.00
Elev 718.60

VPI 144+10.00
Elev 719.63

L 100 FT
SD 1181 FT

1.74%

PVT 144+60.00
Elev 720.50

PVC 145+00.00
Elev 721.19

L 100 FT
SD 3400 FT

Sta 144+88.32 End Normal Section & Begin Runout

VPI 145+50.00
Elev 722.06

PVT 146+00.00
Elev 723.09

Sta 146+78.80 Flat Section Rt End Runout & Begin Runoff

Sta 148+63.28 Reverse Crown

2.06%

PVC 150+38.00
Elev 732.12

L 100 FT
SD 777 FT

VPI 150+88.00
Elev 733.15

PVT 151+38.00
Elev 734.44

2.58%

L 100 FT
SD 824 FT

PVC 152+99.65
Elev 738.61

VPI 153+49.65
Elev 739.90

PVT 153+99.65
Elev 741.43

3.06%

Sta 152+78.80 End Runoff & Begin Full Superelevation (e = 6.3%)

I-471 (SB)
PROFILE GRADE

SCALE: 1" = 50' HORIZONTAL
1" = 10' VERTICAL

140+00	141+00	142+00	143+00	144+00	145+00	146+00	147+00	148+00	149+00	150+00	151+00	152+00	153+00	154+00	155+00
711.1 711.19	712.2 712.22	713.2 713.25	714.2 714.28	715.3 715.31	716.3 716.34	717.3 717.37	718.4 718.39	719.4 719.40	720.3 720.32	721.2 721.19	722.1 722.10	723.1 723.09	724.1 724.12	725.2 725.15	726.1 726.18	727.3 727.21	728.3 728.25	729.3 729.28	730.3 730.31	731.3 731.34	732.3 732.37	733.4 733.50	734.6 734.75	735.8 736.04	737.1 737.33	738.5 738.62	739.9 739.97	741.5 741.44	743.0 742.97	744.7 744.50

PROFILE SHEET

I-471 SB STA 140+00 TO STA 155+00

FILE NAME: P:\CIVIL\147N6-2021.00\CONTRACT PLANS AND PROPOSAL\CONTRACT PLAN SET\ROADWAY\R4000PF.DGN
USER: tvonbehren
DATE PLOTTED: January 2, 2012
E-SHEET NAME:
MicroStation v8.11.7.443

COUNTY OF	ITEM NO.	SHEET NO.
CAMPBELL	6-2021.00	R41

Preliminary Plans

DATUM 710 700 690 680 670 660 650 640

10+00 11+00 12+00 13+00 14+00 15+00 16+00 17+00 18+00 19+00 20+00 21+00 22+00 23+00 24+00 25+00

688.5 687.8 687.80 687.1 686.99 686.0 686.23 685.4 685.50 684.8 684.89 684.5 684.67 684.8 684.75 685.0 684.99 685.3 685.32 685.8 685.81 686.4 686.46 687.1 687.20 688.0 688.11 689.0 689.08 689.8 689.94 690.4 690.61 690.9 691.10 691.3 691.41 691.5 691.53 691.4 691.37 690.9 690.90 690.2 690.24 689.4 689.40 688.4 688.35 687.2 687.12 685.9 685.85 684.6 684.61 683.4 683.37 682.1 682.04

STA 25+54.14
I-471 SB NOSE

LT EDGE OF PAVEMENT

Match Exist Pavement Elevations
to Construct Island & Transition
to Existing Us 27

SPLINE GRADE

VPI 10+36.00
Elev 689.31

-1.40%

-0.77%

STA 10+36.00 - BEGIN
US 27 RAMP D

PVC 13+05.00
Elev 686.04

Sta 12+19.25 Flat Section -
End Transition From US 27
& Begin Runoff

Sta 13+72.60 End Runoff & Begin
Full Superelevation (e = 5.2%)

L 350 FT
SD 1173 FT

VPI 14+80.00
Elev 684.70

1.49%

PVT 16+55.00
Elev 687.31

Sta 17+16.37 End Full Superelevation
(e = 5.2%) & Begin Runoff

PVC 17+90.00
Elev 689.32

Sta 18+81.15 Flat Section -
End Runoff Bk
& Begin Runoff Ahd

VPI 20+40.00
Elev 693.05

L 500 FT
SD 546 FT

Sta 20+77.61 End Runoff & Begin
Full Superelevation (e = 6.2%)

PVT 22+90.00
Elev 687.66

-2.15%

Sta 22+90.65 End Full
Superelevation (e = 6.2%)
& Begin Runoff
(See Development Plan)

SPLINE GRADE

-2.62%

VPI 25+54.14
Elev 681.95

STA 25+54.14 - END
US 27 RAMP D

RT EDGE OF PAVEMENT
PROFILE GRADE

689.6 689.61 689.1 689.00 688.5 688.38 687.5 687.61 686.9 686.86 686.3 686.46 686.1 686.08 685.8 685.76 685.5 685.60 685.7 685.61 685.8 685.77 686.1 686.10 686.6 686.59 687.2 687.24 688.0 687.98 688.7 688.73 689.4 689.47 690.0 690.09 690.52 690.77 690.85 690.73 690.6 690.44 690.1 689.97 689.4 689.31 688.5 688.47 687.5 687.45 686.4 686.37 685.3 685.25 684.3 684.28 683.2 683.31 682.0 682.06

SCALE: 1" = 50' HORIZONTAL
1" = 10' VERTICAL

PROFILE
STA 10+00 TO STA 25+00 (US 27 RAMP D)

FILE NAME: P:\CIVIL\471\6-2021.00\CONTRACT PLANS AND PROPOSAL\CONTRACT PLAN SET\ROADWAY\R04100PF.DGN
USER: tvonbehren
DATE PLOTTED: January 2, 2012
E-SHEET NAME:
MicroStation v8.11.7.443

COUNTY OF	ITEM NO.	SHEET NO.
CAMPBELL	6-2021.00	R42

I-471
P.I. STA. 162+39.08
Δ = 82°09'02" LT
C = 3°59'24"
Ts = 1560.27'
Ls 600.00'
Lc = 1458.93'
θ = 11°58'12"
L.T. = 400.92'
S.T. = 200.84'
R = 1436.00'
Es = 482.73'
e = 6.3%
Runout = 190.48'

US 27 RAMP A
P.I. STA. 10+77.90
Δ = 6°36'51" RT
C = 4°15'00"
T = 77.90'
L = 155.63'
R = 1348.14'
E = 2.25'
e = 4.4%

STA 10+00.00 - BEGIN US 27 RAMP A CONSTRUCTION

STA 28+96.08 - END US 27 RAMP B CONSTRUCTION

US 27 RAMP B
P.I. STA. 28+17.15
Δ = 6°12'29" LT
C = 3°55'45"
T = 79.08'
L = 158.00'
R = 1458.20'
E = 2.14'
e = 2.1% to 6.3%

REMOVE GUARDRAIL
Lt (Outside) I-471 Sta 164+26 to Sta 170+00 - 546.6 Lin Ft
Rt (Outside) I-471 Sta 155+00 to Sta 170+00 - 1576.7 Lin Ft

CONSTRUCT GUARDRAIL-STEEL W BEAM S-FACE
Lt (Outside) I-471 Sta 164+26 to Sta 170+00 - 546.6 Lin Ft
w/ 1 - Guardrail End Treatment Type 2A
Rt (Outside) I-471 Sta 155+00 to Sta 170+00 - 1576.7 Lin Ft

Preliminary Plans

SCALE: 1"= 50'

PLAN
I-471 STA 155+00 TO STA 170+00

FILE NAME: P:\CIVIL\471\N6-2021.00\CONTRACT PLANS AND PROPOSAL\CONTRACT PLAN SET\ROADWAY\R0420PL.DGN
USER: tvonbehren
DATE PLOTTED: January 2, 2012
E-SHEET NAME:
MicroStation v8.11.7.443

COUNTY OF	ITEM NO.	SHEET NO.
CAMPBELL	6-2021.00	R43

ALONG RT EDGE OF PAVEMENT

ALONG US 27 RAMP C TAPER

ALONG RT EDGE OF PAVEMENT

I-471 (NB)
RT EDGE OF PAVEMENT

VPI 155+50.00
Elev 746.00

VPI 157+50.00
Elev 751.90

VPI 161+40.00
Elev 763.77

PVC 164+07.50
Elev 771.81

VPI 170+00.00
Elev 789.63

3.17%

2.95%

3.04%

3.01%

Sta 167+37.73 End Full Superelevation
(e = 6.3%) & Begin Runoff

L 1185 FT
SD 642 FT

I-471 (NB)
PROFILE GRADE

SCALE: 1" = 50' HORIZONTAL
1" = 10' VERTICAL

PROFILE SHEET

I-471 NB STA 155+00 TO STA 170+00

Preliminary Plans

FILE NAME: P:\CIVIL\147IN6-2021.00\CONTRACT PLANS AND PROPOSAL\CONTRACT PLAN SET\ROADWAY\R0430PF.DGN
USER: tvonbehren
DATE PLOTTED: January 2, 2012
E-SHEET NAME:
MicroStation v8.11.7.443

COUNTY OF	ITEM NO.	SHEET NO.
CAMPBELL	6-2021.00	R44

ALONG LT EDGE OF PAVEMENT

ALONG US 27 RAMP A TAPER

ALONG LT EDGE OF PAVEMENT

I-471 (SB)
LT EDGE OF PAVEMENT



Preliminary Plans



I-471 (SB)
PROFILE GRADE

SCALE: 1" = 50' HORIZONTAL
1" = 10' VERTICAL

PROFILE SHEET

I-471 SB STA 155+00 TO STA 170+00

FILE NAME: P:\CIVIL\147TN6-2021.00\CONTRACT PLANS AND PROPOSAL\CONTRACT PLAN SET\ROADWAY\R0440PF.DGN

USER: tvonbehren
DATE PLOTTED: January 2, 2012

E-SHEET NAME:

MicroStation v8.11.7.443

COUNTY OF	ITEM NO.	SHEET NO.
CAMPBELL	6-2021.00	R45

DATUM

760 750 740 730 720 710 700 690

STA 10+00.00
I-471 SB NOSE

LT EDGE OF PAVEMENT

10+00	11+00	12+00	13+00	14+00	15+00	16+00	17+00	18+00	19+00	20+00
761.3 / 761.37	759.5 / 759.44	757.7 / 757.68	756.0 / 755.94	754.1 / 754.01	752.0 / 751.90	749.7 / 749.61	747.3 / 747.25	744.9 / 744.90	742.5 / 742.54	740.1 / 740.18	737.8 / 737.82	735.5 / 735.46	733.1 / 733.10	730.7 / 730.75	728.4 / 728.39	726.1 / 726.03	723.7 / 723.67	721.4 / 721.31	719.1 / 719.02	716.9 / 716.73

Preliminary Plans

780 770 760 750 740 730 720 710 700

See I-471 for Continuation

VPI 10+00.00
Elev 760.35

VPI 10+33.72
Elev 759.17

VPI 11+93.00
Elev 754.00

-3.50%

-3.24%

-4.72%

STA 10+00.00 - BEGIN
US 27 RAMP A

PVC 10+93.00
Elev 757.24

Sta 11+00.00 End Runoff & Begin Full Superelevation (e = 4.4%)
(See Development Plan)

L 200 FT
SD 833 FT

PVT 12+93.00
Elev 749.28

SCALE: 1" = 50' HORIZONTAL
1" = 10' VERTICAL

RT EDGE OF PAVEMENT
PROFILE GRADE

10+00	11+00	12+00	13+00	14+00	15+00	16+00	17+00	18+00	19+00	20+00
760.4 / 760.35	758.6 / 758.64	756.9 / 757.02	755.1 / 755.28	753.2 / 753.35	751.0 / 751.24	748.8 / 748.95	746.4 / 746.59	744.0 / 744.24	741.6 / 741.88	739.3 / 739.52	736.9 / 737.16	734.6 / 734.80	732.2 / 732.44	729.8 / 730.09	727.5 / 727.73	725.1 / 725.37	722.8 / 723.01	720.5 / 720.65	718.1 / 718.29	715.7 / 715.94

PROFILE
STA 10+00 TO STA 20+00 (US 27 RAMP A)

FILE NAME: P:\CIVIL\471\6-2021.00\CONTRACT PLANS AND PROPOSAL\CONTRACT PLAN SET\ROADWAY\R04500PF.DGN
USER: tvonbehren
DATE PLOTTED: January 2, 2012
E-SHEET NAME:
MicroStation v8.11.7.443

COUNTY OF	ITEM NO.	SHEET NO.
CAMPBELL	6-2021.00	R46

Preliminary Plans

LT EDGE OF PAVEMENT

RT EDGE OF PAVEMENT
PROFILE GRADE

Match Exist Pavement Elevations
to Construct Island & Transition
to Existing Us 27

-4.72%

L 200 FT
SD 225 FT

0.02%

VPI 26+72.38
Elev 689.93

STA 26+72.38 - END
US 27 RAMP A

Sta 22+99.69 End Full Superelevation
(e = 4.40%) & Begin Runoff

Sta 24+30 Flat Section -
End Runoff & Begin
Transition to US 27

PVC 24+52.00
Elev 694.62

VPI 25+52.00
Elev 689.90

PVT 26+52.00
Elev 689.92

	20+00		21+00		22+00		23+00		24+00		25+00		26+00		27+00
LT EDGE OF PAVEMENT	716.9	716.73	714.6	714.44	712.3	712.14	710.1	709.85	707.8	707.56	705.5	705.27	703.1	702.97	700.3	700.16	697.3	697.34	694.4	694.54	692.2	692.25	690.8	690.79	689.9	689.95	689.7	689.70
RT EDGE OF PAVEMENT PROFILE GRADE	715.7	715.94	713.4	713.58	711.0	711.22	708.7	708.86	706.3	706.50	704.0	704.14	701.6	701.79	699.3	699.43	696.9	697.07	694.5	694.71	692.2	692.63	691.1	691.13	690.2	690.23	689.9	689.92	689.7	

SCALE: 1" = 50' HORIZONTAL
1" = 10' VERTICAL

PROFILE
STA 20+00 TO STA 27+00 (US 27 RAMP A)

FILE NAME: P:\CIVIL\147\16-2021.00\CONTRACT PLANS AND PROPOSAL\CONTRACT PLAN SET\ROADWAY\R0460OPF.DGN
USER: tvanbehren
DATE PLOTTED: January 2, 2012
E-SHEET NAME:
MicroStation v8.11.7.443

COUNTY OF	ITEM NO.	SHEET NO.
CAMPBELL	6-2021.00	R47

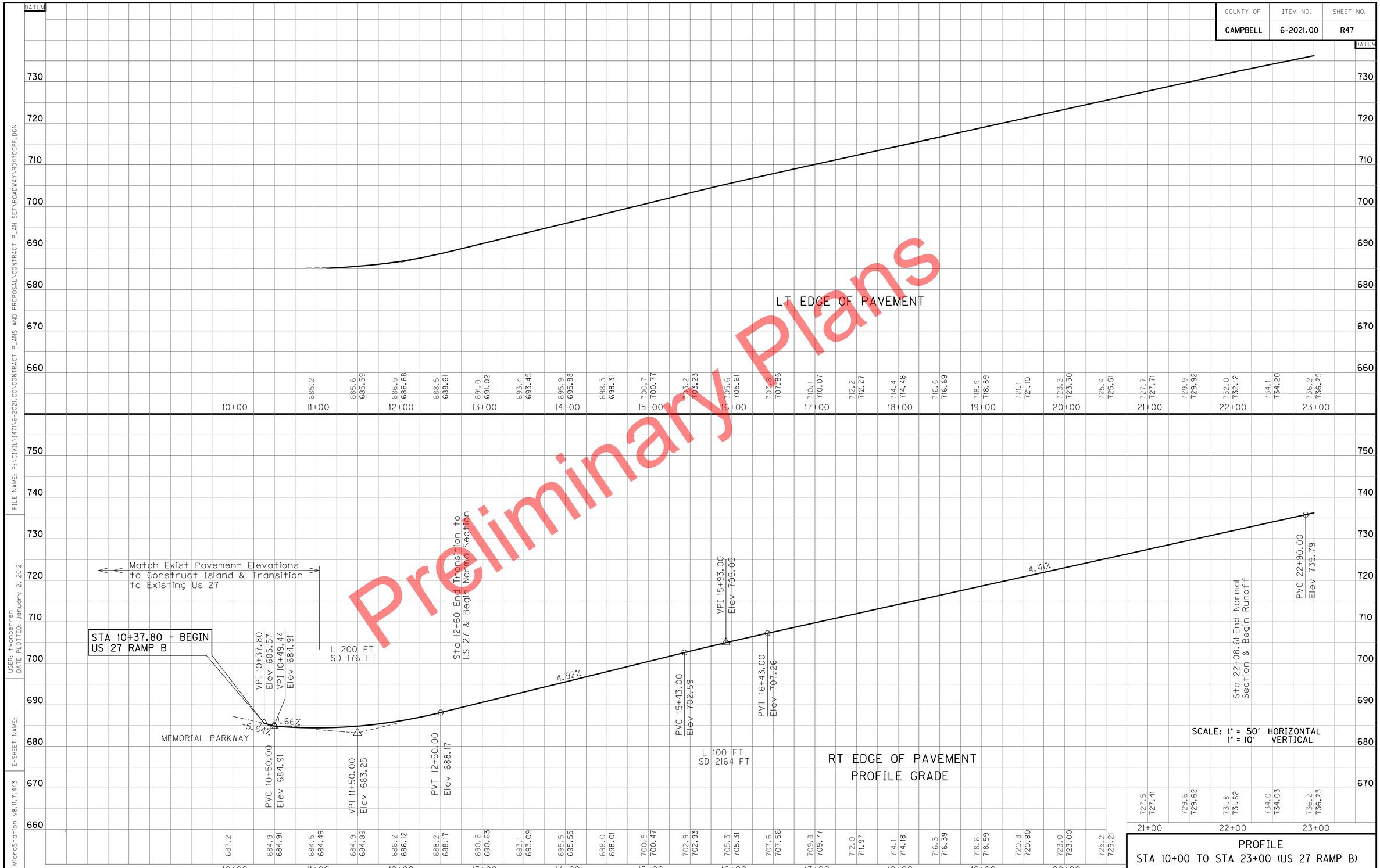

PROFILE
STA 10+00 TO STA 23+00 (US 27 RAMP B)

Preliminary Plans

FILE NAME: P:\CIVIL\I471\6-2021.00\CONTRACT PLANS AND PROPOSAL\CONTRACT PLAN SET\ROADWAY\R04700PF.DGN
USER: tvonbehren
DATE PLOTTED: January 2, 2012
E-SHEET NAME:
MicroStation v8.11.7.443

COUNTY OF	ITEM NO.	SHEET NO.
CAMPBELL	6-2021.00	R48

DATUM

770
760
750
740
730
720
710
700

736.2 736.25 | 738.1 738.15 | 739.8 739.84 | 741.3 741.45 | 742.9 743.02 | 744.5 744.50 | 746.0 745.90 | 747.5 747.41 | 748.9 748.93 | 750.3 750.43 | 751.8 751.81 | 753.2 753.24 | 754.5

23+00 | 24+00 | 25+00 | 26+00 | 27+00 | 28+00 | 29+00 | 30+00

STA 157+50.00
I-471 NB NOSE

LT EDGE OF PAVEMENT

790
780
770
760
750
740
730
720
710
700

Sta 23+06.17 Flat Section - End Runoff Bk & Begin Runoff Ahd

VPI 23+65.00
Elev 739.10

Sta 24+08.61 End Runoff & Begin Full Superelevation (e = 2.1%)

SPLINE GRADE

VPI 25+00.00
Elev 743.34

3.14%

PVT 24+40.00
Elev 741.46

L 150 FT
SD 924 FT

Sta 27+38.07 End Full Superelevation (e = 2.1%) & Begin Runoff (See Development Plan)

VPI 28+96.08
Elev 755.34

3.17%

See I-471 for Continuation

STA 28+96.08 - END
US 27 RAMP B

RT EDGE OF PAVEMENT
PROFILE GRADE

736.2 736.23 | 738.3 738.29 | 740.1 740.13 | 741.8 741.77 | 743.3 743.34 | 744.9 744.81 | 746.3 746.22 | 747.8 747.72 | 749.1 749.23 | 750.6 750.77 | 752.2 752.31 | 753.7 753.88 | 755.45

23+00 | 24+00 | 25+00 | 26+00 | 27+00 | 28+00 | 29+00 | 30+00 | 31+00

SCALE: 1" = 50' HORIZONTAL
1" = 10' VERTICAL

PROFILE
STA 23+00 TO STA 31+00 (US 27 RAMP B)

Preliminary Plans

FILE NAME: P:\CIVIL\471\6-2021.00\CONTRACT PLANS AND PROPOSAL\CONTRACT PLAN SET\ROADWAY\R048OPF.DGN
USER: tvonbehren
DATE PLOTTED: January 2, 2012
E-SHEET NAME:
MicroStation v8.11.7.443

COUNTY OF	ITEM NO.	SHEET NO.
CAMPBELL	6-2021.00	R49

I-471
P.I. STA. 162+39.08
Δ = 82°09'02" LT
C = 3°59'24"
Ts = 1560.27'
Ls 600.00'
Lc = 1458.93'
θ = 11°58'12"
L.T. = 400.92'
S.T. = 200.84'
R = 1436.00'
Es = 482.73'
e = 6.3%
Runout = 190.48'

170+00 175+00 180+00 185+00

270 269 268 244 245 243

ST 173+37.73

TS 177+27.25

SC 180+77.25

6" Perf Pipe

SIGN (Lighted)

Conc. Sign Base

SIGN

Traffic Control Cabinet

019B00050N

N 51°03'50" W

℄ I-471

HIGHLAND AVE

REMOVE GUARDRAIL

Lt (Outside) I-471 Sta 170+00 to Sta 185+00 - 1510.5 Lin Ft
Rt (Outside) I-471 Sta 170+00 to Sta 172+38 - 242.5 Lin Ft
Rt (Outside) I-471 Sta 183+98 to Sta 185+00 - 99.2 Lin Ft

CONSTRUCT GUARDRAIL-STEEL W BEAM S-FACE

Lt (Outside) I-471 Sta 170+00 to Sta 185+00 - 1510.5 Lin Ft

Rt (Outside) I-471 Sta 170+00 to Sta 172+36 - 240.5 Lin Ft
w/ 1 - Guardrail End Treatment Type 2A

Rt (Outside) I-471 Sta 183+40 to Sta 185+00 - 118.2 Lin Ft
w/ 1 - Guardrail End Treatment Type 4A

I-471
P.I. STA. 187+79.88
Δ = 33°57'14" RT
C = 1°59'39"
Ts = 1052.62'
Ls = 350.00'
Lc = 1352.56'
θ = 3°29'24"
L.T. = 233.38'
S.T. = 116.71'
R = 2873.00'
Es = 132.76'
e = 3.8%
Runout = 184.21'

Preliminary Plans

SCALE: 1"= 50'

PLAN

I-471 STA 170+00 TO STA 185+00

MicroStation v8.11.7.443
E-SHEET NAME:
USER: tvonbehren
DATE PLOTTED: January 2, 2012
FILE NAME: P:\CIVIL\147IN\6-2021.00\CONTRACT PLANS AND PROPOSAL\CONTRACT PLAN SET\ROADWAY\R04900PL.DGN

COUNTY OF	ITEM NO.	SHEET NO.
CAMPBELL	6-2021.00	R50

Preliminary Plans

I-471 (NB)
RT EDGE OF PAVEMENT

PROFILE GRADE
I-471 (NB)

VPI 170+00.00
Elev 789.63

L 1185 FT
SD 642 FT

-3.19%

PVT 175+92.50
Elev 770.71

VPI 179+00.00
Elev 760.90

-3.20%

Sta 171+47.26 Reverse Crown

Sta 173+37.73 Flat Section Rt
End Runoff & Begin Runout

Sta 175+28.21 End Runout
& Begin Normal Section

Sta 175+43.04 End Normal
Section & Begin Runout

Sta 177+27.25 Flat Section Lt
End Runout & Begin Runoff

Sta 179+11.46 Reverse Crown

Sta 180+77.25 End Runoff
& Begin Full Superelevation
(e = 6.3%)

SCALE: 1" = 50' HORIZONTAL
1" = 10' VERTICAL

PROFILE SHEET

I-471 NB STA 170+00 TO STA 185+00

DATUM: 790, 780, 770, 760, 750, 740, 730, 720, 710

170+00 171+00 172+00 173+00 174+00 175+00 176+00 177+00 178+00 179+00 180+00 181+00 182+00 183+00 184+00 185+00

782.1 782.15 | 781.8 781.78 | 781.3 781.29 | 780.7 780.67 | 780.0 779.97 | 779.2 779.15 | 778.2 778.20 | 777.1 777.11 | 775.9 775.89 | 774.5 774.55 | 773.1 773.07 | 771.5 771.53 | 769.9 769.92 | 768.3 768.26 | 766.6 766.60 | 764.9 764.94 | 763.2 763.27 | 761.5 761.61 | 759.9 759.95 | 758.1 758.13 | 756.3 756.27 | 754.4 754.41 | 752.6 752.67 | 750.9 751.07 | 749.3 749.46 | 747.8 747.86 | 746.2 746.26 | 744.6 744.66 | 743.0 743.06 | 741.4 741.46 | 739.8 739.86

780.4 780.45 | 780.4 780.33 | 780.1 780.09 | 779.8 779.72 | 779.2 779.21 | 778.6 778.58 | 777.8 777.81 | 776.9 776.92 | 775.8 775.89 | 774.7 774.73 | 773.4 773.44 | 772.0 772.02 | 770.5 770.47 | 768.9 768.88 | 767.3 767.28 | 765.7 765.69 | 764.1 764.09 | 762.5 762.49 | 760.9 760.90 | 759.3 759.30 | 757.7 757.69 | 756.2 756.09 | 754.5 754.49 | 752.9 752.89 | 751.3 751.29 | 749.6 749.69

748.0 748.09 | 746.4 746.48 | 744.8 744.88 | 743.3 743.28 | 741.7 741.68

FILE NAME: P:\CIVIL\471N\6-2021.00\CONTRACT PLANS AND PROPOSAL\CONTRACT PLAN SET\ROADWAY\R5000PF.DGN
USER: tvonbehren
DATE PLOTTED: January 2, 2012
E-SHEET NAME:
MicroStation v8.11.7.443

COUNTY OF	ITEM NO.	SHEET NO.
CAMPBELL	6-2021.00	R51

DATUM

790 780 770 760 750 740 730 720 710

170+00	171+00	172+00	173+00	174+00	175+00	176+00	177+00	178+00	179+00	180+00	181+00	182+00	183+00	184+00	185+00
778.7	778.9	778.7	778.3	777.7	777.0	776.2	775.2	774.1	772.9	771.6	770.2	768.9	767.4	766.0	764.6	763.2	761.7	760.4	759.0	757.7	756.1	754.4	752.9	751.4	749.8	748.2	746.7	745.1	743.4
778.76	778.89	778.90	778.76	778.32	777.74	777.04	776.21	775.24	774.15	772.93	771.57	770.22	768.83	767.43	766.04	764.65	763.23	761.82	760.45	759.10	757.75	756.29	754.68	753.07	751.47	749.87	748.27	746.68	745.08	743.48

I-471 (SB)
LT EDGE OF PAVEMENT

Preliminary Plans

VPI 169+96.00
Elev 789.67

L 1190 FT
SD 644 FT

-3.18%

PVT 175+91.00
Elev 770.76

VPI 178+00.00
Elev 764.12

-3.22%

VPI 182+00.00
Elev 751.24

-3.20%

Sta 171+47.26 Reverse Crown

Sta 173+37.73 Flat Section Rt
End Runoff & Begin Runout

Sta 175+28.21 End Runout
& Begin Normal Section

Sta 175+43.04 End Normal
Section & Begin Runout

Sta 177+27.25 Flat Section Lt
End Runout & Begin Runoff

Sta 179+11.46 Reverse Crown

Sta 180+77.25 End Runoff
& Begin Full Superelevation
(e = 6.3%)

SCALE: 1" = 50' HORIZONTAL
1" = 10' VERTICAL

I-471 (SB)
PROFILE GRADE

170+00	171+00	172+00	173+00	174+00	175+00	176+00	177+00	178+00	179+00	180+00	181+00	182+00	183+00	184+00	185+00
780.4	780.3	780.1	779.7	779.2	778.5	777.8	776.9	775.8	774.6	773.4	772.0	770.5	768.9	767.3	765.7	764.1	762.5	760.9	759.3	757.7	756.1	754.5	752.8	751.2	749.7	748.1	746.5	744.9	743.3	741.7
780.46	780.34	780.10	779.72	779.21	778.58	777.81	776.91	775.89	774.73	773.44	772.02	770.48	768.89	767.30	765.71	764.12	762.51	760.90	759.29	757.68	756.07	754.46	752.85	751.24	749.64	748.05	746.45	744.85	743.25	741.66

PROFILE SHEET

I-471 SB STA 155+00 TO STA 170+00

FILE NAME: P:\CIVIL\147IN6-2021.00\CONTRACT PLANS AND PROPOSAL\CONTRACT PLAN SET\ROADWAY\R0510OPF.DGN
USER: tvonbehren
DATE PLOTTED: January 2, 2012
E-SHEET NAME:
MicroStation v8.11.7.443

COUNTY OF	ITEM NO.	SHEET NO.
CAMPBELL	6-2021.00	R52

REMOVE GUARDRAIL

Lt (Outside) I-471 Sta 185+00 to Rt GA Ramp F Sta 34+00 - 1509.6 Lin Ft
Rt (Outside) I-471 Sta 185+00 to Rt GA Ramp E Sta 15+08 - 1256.8 Lin Ft

CONSTRUCT GUARDRAIL-STEEL W BEAM S-FACE

Lt (Outside) I-471 Sta 185+00 to Rt GA Ramp F Sta 34+00 - 1509.6 Lin Ft

Rt (Outside) I-471 Sta 185+00 to Rt GA Ramp E Sta 15+08 - 1256.8 Lin Ft
w/ 1 - Guardrail End Treatment Type 2A

CONSTRUCT ISLAND INTEGRAL CURB (JPC ALTERNATE) OR
CONSTRUCT ISLAND HEADER CURB TYPE 2 (ASPHALT ALTERNATE)

Rt (Outside) I-471 Sta 185+92 to Rt GA Ramp E Sta 9+63 - 624 Lin Ft

CONSTRUCT FLUME INLET TYPE 2

Rt (Outside I-471 Sta 189+49 - 1 Each
Rt GA Ramp E Sta 9+78 - 1 Each

GA RAMP F

P.I. STA. 34+61.35
Δ = 5°57'39" RT
C = 2°00'00"
T = 149.15'
L = 298.04'
R = 2864.79'
E = 3.88'
e = 3.8%

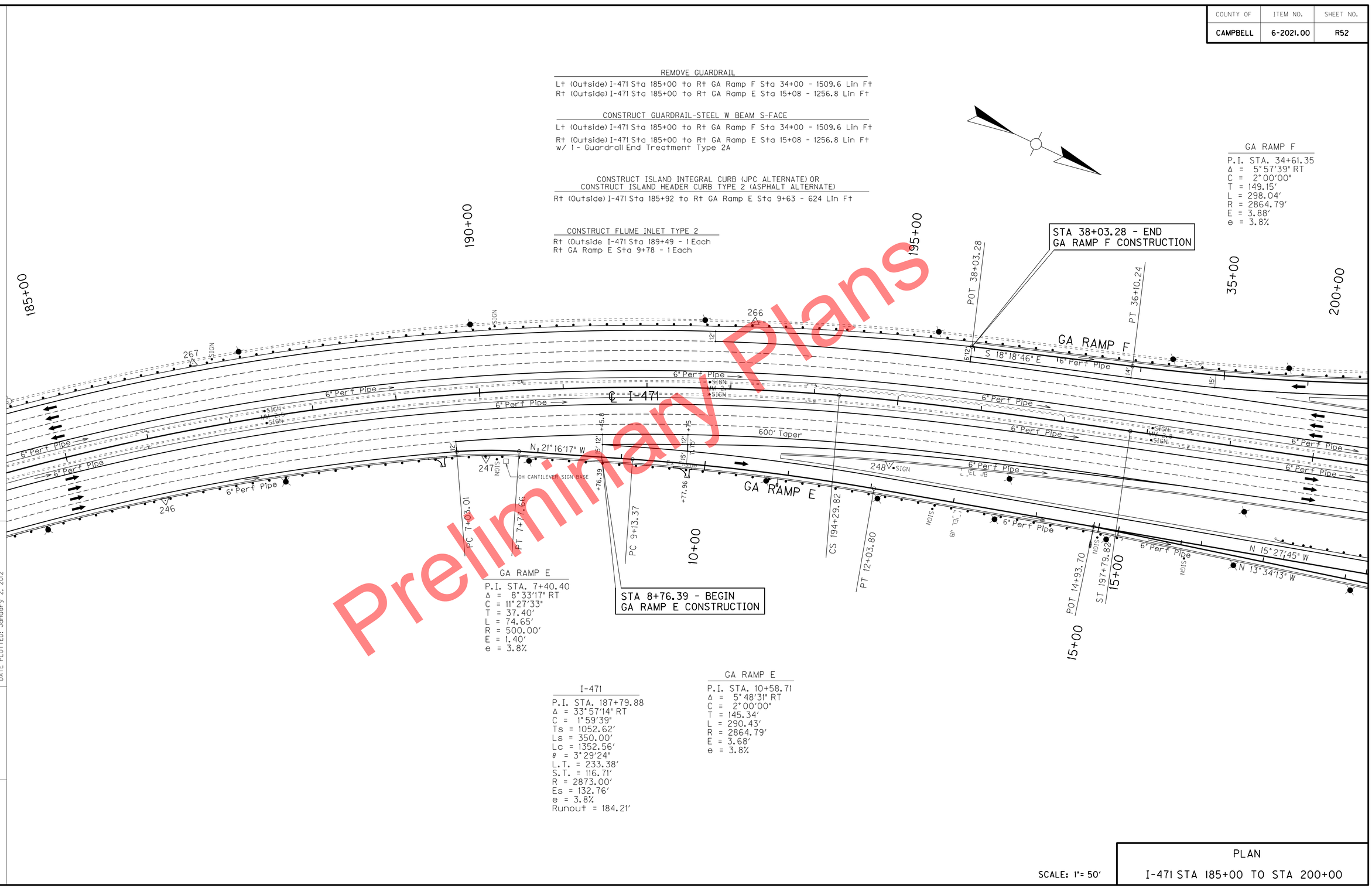

GA RAMP E

P.I. STA. 7+40.40
Δ = 8°33'17" RT
C = 11°27'33"
T = 37.40'
L = 74.65'
R = 500.00'
E = 1.40'
e = 3.8%

I-471

P.I. STA. 187+79.88
Δ = 33°57'14" RT
C = 1°59'39"
Ts = 1052.62'
Ls = 350.00'
Lc = 1352.56'
θ = 3°29'24"
L.T. = 233.38'
S.T. = 116.71'
R = 2873.00'
Es = 132.76'
e = 3.8%
Runout = 184.21'

GA RAMP E

P.I. STA. 10+58.71
Δ = 5°48'31" RT
C = 2°00'00"
T = 145.34'
L = 290.43'
R = 2864.79'
E = 3.68'
e = 3.8%

Preliminary Plans

SCALE: 1"= 50'

PLAN

I-471 STA 185+00 TO STA 200+00

FILE NAME: P:\CIVIL\I471N6-2021.00\CONTRACT PLANS AND PROPOSAL\CONTRACT PLAN SET\ROADWAY\R0520PL.DGN
USER: tvonbehren
DATE PLOTTED: January 2, 2012
E-SHEET NAME:
MicroStation v8.11.7.443

COUNTY OF	ITEM NO.	SHEET NO.
CAMPBELL	6-2021.00	R53

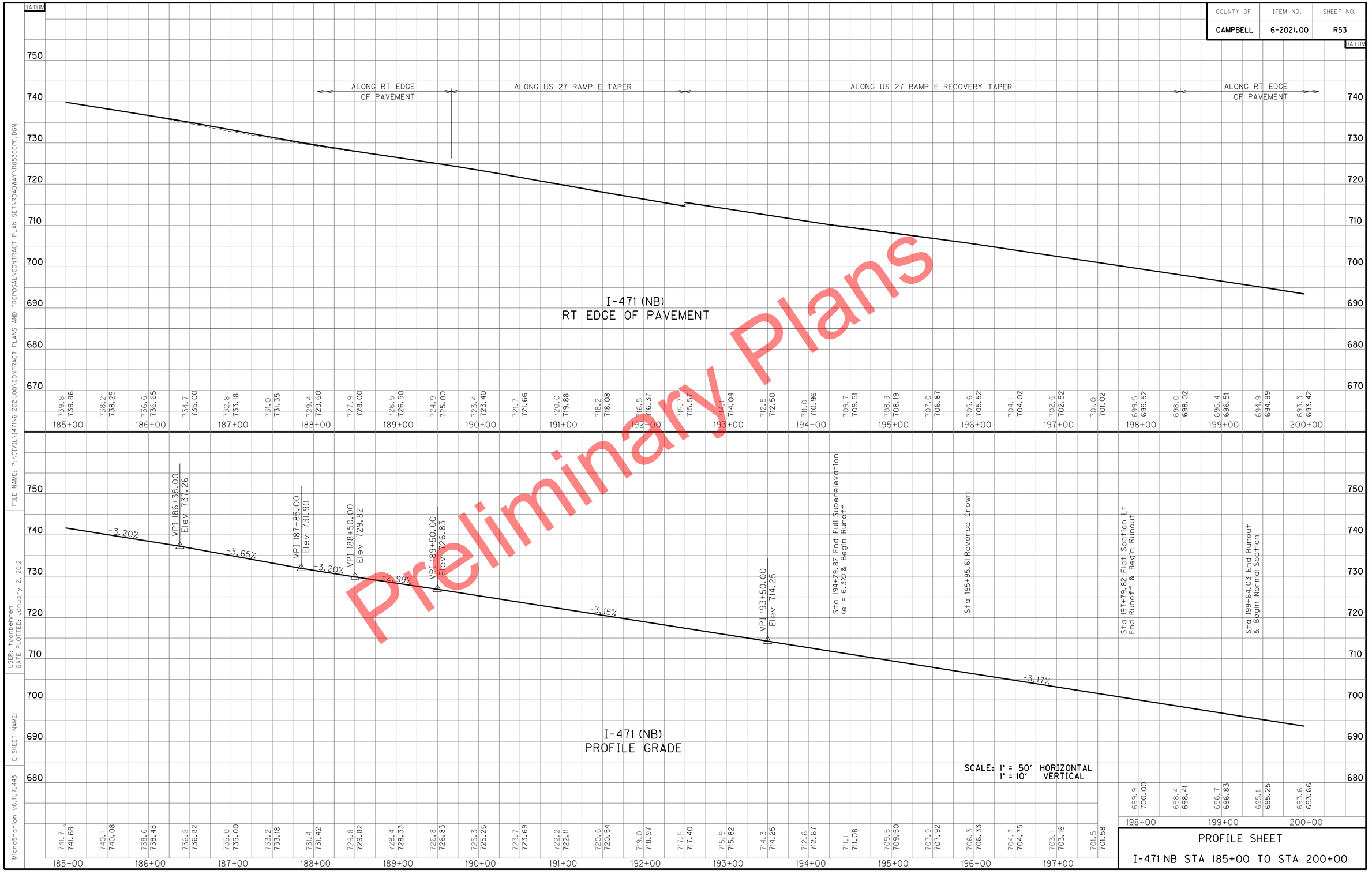

Preliminary Plans

PROFILE SHEET

I-471 NB STA 185+00 TO STA 200+00

FILE NAME: P:\CIVIL\147IN6-2021.00\CONTRACT PLANS AND PROPOSAL\CONTRACT PLAN SET\ROADWAY\R053OPF.DGN
USER: tvonbehren
DATE PLOTTED: January 2, 2012
E-SHEET NAME:
MicroStation v8.11.7.443

COUNTY OF	ITEM NO.	SHEET NO.
CAMPBELL	6-2021.00	R54

ALONG LT EDGE OF PAVEMENT

ALONG GA RAMP F TAPER

ALONG LT EDGE OF PAVEMENT

I-471 (SB)
LT EDGE OF PAVEMENT

I-471 (SB)
PROFILE GRADE

-3.20%

PVC 185+50.00
Elev 740.06

VPI 186+00.00
Elev 738.46

L 100 FT
SD 5508 FT

-3.39%

PVT 186+50.00
Elev 736.76

PVC 187+61.00
Elev 733.00

L 100 FT
SD 1111 FT

VPI 188+11.00
Elev 731.30

PVT 188+61.00
Elev 729.78

-3.05%

VPI 189+00.00
Elev 728.59

-3.16%

VPI 194+00.00
Elev 712.79

Sta 194+29.82 End Full Superelevation
(e = 6.3%) & Begin Runoff

Sta 195+95.61 Reverse Crown

-3.20%

Sta 197+79.82 Flat Section Lt
End Runoff & Begin Runout

VPI 198+99.77
Elev 696.80

Sta 199+64.03 End Runout
& Begin Normal Section

-3.30%

SCALE: 1" = 50' HORIZONTAL
1" = 10' VERTICAL

PROFILE SHEET

I-471 SB STA 185+00 TO STA 200+00

Preliminary Plans

FILE NAME: P:\CIVIL\147IN6-2021.00\CONTRACT PLANS AND PROPOSAL\CONTRACT PLAN SET\ROADWAY\R0540PF.DGN
USER: tvonbehren
DATE PLOTTED: January 2, 2012
E-SHEET NAME:
MicroStation v8.11.7.443

COUNTY OF	ITEM NO.	SHEET NO.
CAMPBELL	6-2021.00	R55

Preliminary Plans

I-471
P.I. STA. 212+96.78
Δ = 5°47'05" LT
C = 0°44'00"
T = 394.74'
L = 788.81'
R = 7813.10'
E = 9.97'
e = 2.0%
Runoff = 150'
Runout = 150'

GA RAMP F
P.I. STA. 19+43.78
Δ = 14°30'49" RT
C = 3°00'00"
T = 243.20'
L = 483.79'
R = 1909.86'
E = 15.42'
e = 3.8%

GA RAMP E
P.I. STA. 23+02.94
Δ = 37°49'35" RT
C = 16°00'00"
T = 122.70'
L = 236.42'
R = 358.10'
E = 20.44'

GA RAMP EE

P.I. STA. 20+16.11	P.I. STA. 23+17.18	P.I. STA. 25+01.18
Δ = 25°53'27" RT	Δ = 45°51'29" RT	Δ = 58°40'33" RT
C = 8°30'03"	C = 16°00'16"	C = 65°51'26"
T = 154.93'	T = 151.44'	T = 48.90'
L = 304.57'	L = 286.53'	L = 89.10'
R = 674.00'	R = 358.0'	R = 87.0'
E = 17.58'	E = 30.71'	E = 12.80'
e = 6.0%	e = 6.0%	e = Var

GA RAMP E
P.I. STA. 32+64.90
Δ = 93°10'42" LT
C = 12°00'00"
T = 504.72'
L = 776.49'
R = 477.47'
E = 217.31'
e = 6.0%

GA RAMP K
P.I. STA. 17+52.69
Δ = 62°20'26" LT
C = 10°10'37"
T = 340.57'
L = 612.57'
R = 563.00'
E = 94.99'
e = 6.0%

STA 19+22.22 - BEGIN
GA RAMP EE CONSTRUCTION

STA 25+13.7 - END
GA RAMP EE CONSTRUCTION

STA 10+39.60 - BEGIN
GA RAMP K

REMOVE GUARDRAIL

Rt (Outside) I-471 Sta 212+50 to Sta 215+00 - 252.9 Lin Ft
Lt GA Ramp E Sta 16+86 to Sta 25+14 - 800 Lin Ft
Rt GA Ramp E Sta 22+79 to Sta 25+06 - 187.5 Lin Ft
Lt GA Ramp E Sta 27+34 to Sta 28+34 - 100 Lin Ft
Rt GA Ramp E Sta 27+24 to Sta 31+47 - 425 Lin Ft
Rt GA Ramp F Sta 26+39 to Sta 34+00 - 758.3 Lin Ft

CONSTRUCT GUARDRAIL-STEEL W BEAM S-FACE

Rt (Outside) I-471 Sta 212+54 to Sta 215+00 - 211.5 Lin Ft
w/ 1 - Guardrail End Treatment Type 4A
Lt GA Ramp E Sta 16+86 to Sta 25+14 - 762.5 Lin Ft
w/ 1 - Guardrail End Treatment Type 4A &
1 - Guardrail To Bridge End Connector Type A
Rt GA Ramp E Sta 22+79 to Sta 25+06 - 150 Lin Ft
w/ 1 - Guardrail End Treatment Type 4A &
1 - Guardrail Connector To Bridge End Type A
Lt GA Ramp E Sta 27+34 to Sta 28+34 - 100 Lin Ft
w/ 1 - Guardrail Connector To Bridge End Type A-1 &
1 - Guardrail End Treatment Type 2A
Rt GA Ramp E Sta 27+24 to Sta 31+47 - 425 Lin Ft
w/ 1 - Guardrail Connector To Bridge End Type A-1 &
1 - Guardrail End Treatment Type 2A
Rt GA Ramp F Sta 26+39 to Sta 34+00 - 758.3 Lin Ft
w/ 1 - Guardrail End Treatment Type 3

PLAN
I-471 STA 200+00 TO STA 215+00

SCALE: 1"= 50'

FILE NAME: P:\CIVIL\147\N6-2021.00\CONTRACT PLANS AND PROPOSAL\CONTRACT PLAN SET\ROADWAY\R055OPL.DGN
USER: tvonbehren
DATE PLOTTED: January 2, 2012
E-SHEET NAME:
MicroStation v8.11.7.443

COUNTY OF	ITEM NO.	SHEET NO.
CAMPBELL	6-2021.00	R56

Preliminary Plans

I-471 (NB)
RT EDGE OF PAVEMENT

I-471 (NB)
PROFILE GRADE

-3.17%
-3.22%
-3.20%
-3.17%

PVC 208+75.00
Elev 681.78

VPI 204+25.00
Elev 680.20

PVT 204+75.00
Elev 678.59

L 100 FT
SD 20775 FT

Sta 206+02.03 End Normal Section & Begin Runout

Sta 207+52.03 Flat Section Rt End Runout & Begin Runoff

Sta 209+02.03 End Runoff & Begin Full Superelevation (e = 2.0%)

VPI 210+40.00
Elev 660.40

VPI 214+25.00
Elev 648.08

SCALE: 1" = 50' HORIZONTAL
1" = 10' VERTICAL

PROFILE SHEET

I-471 NB STA 200+00 TO STA 215+00

FILE NAME: P:\CIVIL\147IN6-2021.00\CONTRACT PLANS AND PROPOSAL\CONTRACT PLAN SET\ROADWAY\R056OPF.DGN
USER: tvonbehren
DATE PLOTTED: January 2, 2012
E-SHEET NAME:
MicroStation v8.11.7.443

COUNTY OF	ITEM NO.	SHEET NO.
CAMPBELL	6-2021.00	R57

Preliminary Plans

I-471 (SB)
LT EDGE OF PAVEMENT

I-471 (SB)
PROFILE GRADE

L 100 FT
SD 809 FT

L 100 FT
SD 2580 FT

-3.30%
-2.81%
-3.24%
-3.19%
-3.26%

PVC 200+70.00
Elev 691.17

VPI 201+20.00
Elev 689.52

PVT 201+70.00
Elev 688.12

PVC 202+08.00
Elev 687.05

VPI 202+58.00
Elev 685.64

PVT 203+08.00
Elev 684.03

Sta 206+02.03 End Normal Section & Begin Runout

Sta 207+52.03 Flat Section Rt End Runout & Begin Runoff

VPI 209+00.00
Elev 664.87

Sta 209+02.03 End Runoff & Begin Full Superelevation (e = 2.0%)

VPI 214+50.00
Elev 647.33

SCALE: 1" = 50' HORIZONTAL
1" = 10' VERTICAL

PROFILE SHEET

I-471 SB STA 200+00 TO STA 215+00

FILE NAME: P:\CIVIL\147IN6-2021.00\CONTRACT PLANS AND PROPOSAL\CONTRACT PLAN SET\ROADWAY\R057OOPF.DGN
USER: tvonbehren
DATE PLOTTED: January 2, 2012
E-SHEET NAME:
MicroStation v8.11.7.443

COUNTY OF	ITEM NO.	SHEET NO.
CAMPBELL	6-2021.00	R58

Preliminary Plans

STA 20+17.94
GA RAMP EE NOSE

LT EDGE OF PAVEMENT

SPLINE GRADE

See Ramp E for Continuation

VPI 19+00.00
Elev 681.72

-4.06%

STA 19+22.22 - BEGIN
GA RAMP EE

Sta 19+22.22 Full Superelevation (e = 6.0%)

-4.14%

PVC 20+67.25
Elev 675.22

VPI 21+54.75
Elev 671.59

L 175 FT
SD 696 FT

PVT 22+42.25
Elev 666.42

-5.91%

Match Exist Pavement Elevations to Construct Transition to Existing Grand Avenue

Sta 24+52.28 End Full Superelevation (e = 6.0%) & Begin Transition to Grand Ave

VPI 25+37.58
Elev 656.84

5.34%

STA 25+13.7 - END
GA RAMP EE

Grand Avenue

SCALE: 1" = 50' HORIZONTAL
1" = 10' VERTICAL

RT EDGE OF PAVEMENT
PROFILE GRADE

PROFILE
STA 15+00 TO STA 26+00 (GA RAMP EE)

FILE NAME: P:\CIVIL\147\V6-2021.00\CONTRACT PLANS AND PROPOSAL\CONTRACT PLAN SET\ROADWAY\R058OPF.DGN
USER: tvonbehren
DATE PLOTTED: January 2, 2012
E-SHEET NAME:
MicroStation v8.11.7.443

COUNTY OF	ITEM NO.	SHEET NO.
CAMPBELL	6-2021.00	R59

Preliminary Plans

GA RAMP E
P.I. STA. 23+02.94
Δ = 37°49'35" RT
C = 16°00'00"
T = 122.70'
L = 236.42'
R = 358.10'
E = 20.44'

GA RAMP EE
P.I. STA. 20+16.11
Δ = 25°53'27" RT
C = 8°30'03"
T = 154.93'
L = 304.57'
R = 674.00'
E = 17.58'
e = 6.0%

P.I. STA. 23+17.18
Δ = 45°51'29" RT
C = 16°00'16"
T = 151.44'
L = 286.53'
R = 358.0'
E = 30.71'
e = 6.0%

P.I. STA. 25+01.18
Δ = 58°40'33" RT
C = 65°51'26"
T = 48.90'
L = 89.10'
R = 87.0'
E = 12.80'
e = Var

GA RAMP E
P.I. STA. 32+64.90
Δ = 93°10'42" LT
C = 12°00'00"
T = 504.72'
L = 776.49'
R = 477.47'
E = 217.31'
e = 6.0%

REMOVE GUARDRAIL
Lt GA Ramp K Sta 16+68 to Sta 23+30 - 612.5 Lin Ft

CONSTRUCT GUARDRAIL-STEEL W BEAM S-FACE
Lt GA Ramp K Sta 16+68 to Sta 23+30 - 575 Lin Ft
w/ 1 - Guardrail End Treatment Type 4A &
1 - Guardrail End Treatment Type 2A

GA RAMP K
P.I. STA. 17+52.69
Δ = 62°20'26" LT
C = 10°10'37"
T = 340.57'
L = 612.57'
R = 563.00'
E = 94.99'
e = 6.0%

STA 10+39.60 - BEGIN GA RAMP K

SCALE: 1"= 50'

PLAN
GA RAMP K
STA 9+99.80 TO STA 25+00

FILE NAME: P:\CIVIL\147IN6-2021.00\CONTRACT PLANS AND PROPOSAL\CONTRACT PLAN SET\ROADWAY\R0590GPL.DGN
USER: tvonbehren
DATE PLOTTED: January 2, 2012
E-SHEET NAME:
MicroStation v8.11.7.443

COUNTY OF	ITEM NO.	SHEET NO.
CAMPBELL	6-2021.00	R60

DATUM

670 660 650 640 630 620 610 600

642.6 642.61 | 641.8 641.64 | 641.2 641.03 | 640.8 640.76 | 640.4 640.53 | 640.2 640.33 | 640.2 640.29 | 640.6 640.57 | 641.5 641.51 | 643.1 643.06 | 645.2 645.17 | 647.4 647.35 | 649.2 649.19 | 650.7 650.63 | 651.8 651.65 | 652.3 652.27 | 652.6 652.48 | 652.4 652.28

10+00 11+00 12+00 13+00 14+00 15+00 16+00 17+00 18+00 19+00 20+00

LT EDGE OF PAVEMENT

Preliminary Plans

680 670 660 650 640 630 620 610

Match Exist Pavement Elevations
to Construct Island & Transition
to Existing Grand Avenue

Grand Avenue

VPI 10+39.60
Elev 647.90

VPI 10+97.37
Elev 644.16

L 150 FT
SD 601 FT

-2.60%

-0.22%

L 190 FT
SD 222 FT

4.42%

VPI 19+50.00
Elev 659.40

L 540 FT
SD 363 FT

STA 10+39.60 - BEGIN
GA RAMP K

PVC 11+15.00
Elev 643.70

Sta 11+54.68 End Transition
From Grand Ave & Begin Runoff

VPI 11+90.00
Elev 641.75

PVT 12+65.00
Elev 641.59

Sta 14+12.12 End Runoff & Begin
Full Superelevation (e = 6.0%)

PVC 14+39.00
Elev 641.21

VPI 15+34.00
Elev 641.00

PVT 16+29.00
Elev 645.20

PVC 16+80.00
Elev 647.46

RT EDGE OF PAVEMENT
PROFILE GRADE

650.0 | 647.3 647.04 | 644.1 644.09 | 643.0 642.89 | 642.1 642.06 | 641.7 641.64 | 641.4 641.51 | 641.3 641.40 | 641.2 641.29 | 641.2 641.20 | 641.5 641.53 | 642.4 642.47 | 644.0 644.02 | 646.1 646.13 | 648.3 648.31 | 650.2 650.15

10+00 11+00 12+00 13+00 14+00 15+00 16+00 17+00

651.7 651.59 | 652.7 652.61 | 653.3 653.23 | 653.5 653.44 | 653.3 653.24

18+00 19+00 20+00

SCALE: 1" = 50' HORIZONTAL
1" = 10' VERTICAL

PROFILE
STA 10+00 TO STA 20+00 (GA RAMP K)

FILE NAME: P:\CIVIL\147\16-2021.00\CONTRACT PLANS AND PROPOSAL\CONTRACT PLAN SET\ROADWAY\R6000PF.DGN
USER: tvonbehren
DATE PLOTTED: January 2, 2012
E-SHEET NAME:
MicroStation v8.11.7.443

COUNTY OF	ITEM NO.	SHEET NO.
CAMPBELL	6-2021.00	R61

REMOVE GUARDRAIL

Rt GA Ramp F Sta 8+02 to Sta 11+90 - 350 Lin Ft

Rt GA Ramp F Sta 11+99 to Sta 13+37 - 137.5 Lin Ft

CONSTRUCT GUARDRAIL-STEEL W BEAM S-FACE

Rt GA Ramp F Sta 8+02 to Sta 11+90 - 312.5 Lin Ft
w/ 1 - Guardrail End Treatment Type 4A &
1 - Guardrail End Treatment Type 2A

Rt GA Ramp F Sta 11+99 to Sta 13+37 - 137.5 Lin Ft
w/ 2 - Guardrail End Treatment Type 2A

CONSTRUCT ISLAND INTEGRAL CURB (JPC ALTERNATE) OR CONSTRUCT ISLAND HEADER CURB TYPE 2 (ASPHALT ALTERNATE)

Rt GA Ramp F Sta 8+02 to Sta 11+90 - 350 Lin Ft

CONSTRUCT CHANNEL LINING CLASS II

Lt GA Ramp H Sta 16+42 - 11 Ton
(See Note)

NOTE: Excavate Washed-Out Areas Around Drop Box Inlet And Replace With Channel Lining Class II. Excavation To Be Incidental To Channel Lining Bid Item.

CONSTRUCT GUARDRAIL-STEEL W BEAM S-FACE

Lt (Outside) I-471 Sta 215+84 to Sta 217+59 - 175 Lin Ft
w/ 1 - Guardrail End Treatment Type 2A &
1 - Guardrail Connector to Bridge End Type A-1

Lt (Outside) I-471 Sta 220+90 to Sta 224+90 - 362.5 Lin Ft
w/ 1 - Guardrail Connector to Bridge End Type A &
1 - Guardrail End Treatment Type 4A

Rt (Outside) I-471 Sta 215+00 to Sta 216+26 - 126 Lin Ft
w/ 1 - Guardrail Connector to Bridge End Type A

Rt (Outside) I-471 Sta 219+66 to Sta 220+41 - 75 Lin Ft
w/ 1 - Guardrail Connector to Bridge End Type A-1 &
1 - Guardrail End Treatment Type 2A

Rt (Outside) I-471 Sta 227+65 to Sta 230+00 - 242.5 Lin Ft
w/ 1 -Guardrail End Treatment Type 3

Rt GA Ramp H Sta 8+96 to Sta 16+75 - 846.7 Lin Ft
w/ 1 - Guardrail End Treatment Type 2A

REMOVE GUARDRAIL

Lt (Outside) I-471 Sta 215+84 to Sta 217+59 - 175 Lin Ft
Lt (Outside) I-471 Sta 220+90 to Sta 224+92 - 402 Lin Ft
Rt (Outside) I-471 Sta 215+00 to Sta 216+26 - 126 Lin Ft
Rt (Outside) I-471 Sta 219+66 to Sta 220+44 - 78 Lin Ft
Rt (Outside) I-471 Sta 227+65 to Sta 230+00 - 242.2 Lin Ft
Rt GA Ramp H Sta 8+96 to Sta 16+75 - 846.7 Lin Ft

CONSTRUCT ISLAND INTEGRAL CURB (JPC ALTERNATE) OR CONSTRUCT ISLAND CURB & GUTTER (ASPHALT ALTERNATE)

Lt (Outside) I-471 Sta 221+00 to Sta 221+18 - 18 Lin Ft
Rt (Outside) I-471 Sta 215+89.9 to Sta 216+14.9 - 25 Lin Ft
Rt (Outside) I-471 Sta 219+77 to Sta 219+89 - 12 Lin Ft

CONSTRUCT ISLAND INTEGRAL CURB (JPC ALTERNATE) OR CONSTRUCT ISLAND HEADER CURB TYPE 2 (ASPHALT ALTERNATE)

Lt (Outside) I-471 Sta 229+09 to Sta 230+00 - 91 Lin Ft

STA 7+47.52 - BEGIN
GA RAMP F CONSTRUCTION

STA 17+26.80 - END
GA RAMP H CONSTRUCTION

STA 9+95.21 - BEGIN
GA RAMP H CONSTRUCTION

STA 31+63.46 - END
GA RAMP K CONSTRUCTION

GA RAMP F
P.I. STA. 19+43.78
Δ = 14°30'49" RT
C = 3°00'00"
T = 243.20'
L = 483.79'
R = 1909.86'
E = 15.42'
e = 3.8%

GA RAMP F
P.I. STA. 11+65.48
Δ = 17°05'08" RT
C = 10°00'00"
T = 86.07'
L = 170.86'
R = 572.96'
E = 6.43'
e = 5.9%

GA RAMP H
P.I. STA. 12+81.43
Δ = 16°25'57" RT
C = 5°52'35"
T = 140.78'
L = 279.63'
R = 975.00'
E = 10.11'
e = 5.9%

GA RAMP E
P.I. STA. 44+83.12
Δ = 6°13'58" RT
C = 1°10'36"
T = 265.14'
L = 529.76'
R = 4869.88'
E = 7.21'
e = 2.4%

GA RAMP K
P.I. STA. 27+20.26
Δ = 36°27'53" RT
C = 6°00'00"
T = 314.56'
L = 607.74'
R = 954.93'
E = 50.48'
e = 5.0%

LOW WIRE CLEARANCE TABLE

LOCATION			
A	B	C	D
17.4'	16.6'	17.5'	19.5'

Preliminary Plans

SCALE: 1"= 50'

PLAN

I-471 STA 215+00 TO STA 230+00

FILE NAME: P:\CIVIL\147\N6-2021.00\CONTRACT PLANS AND PROPOSAL\CONTRACT PLAN SET\ROADWAY\R6610OPL.DGN
USER: tvonbehren
DATE PLOTTED: January 2, 2012
E-SHEET NAME:
MicroStation v8.11.7.443

COUNTY OF	ITEM NO.	SHEET NO.
CAMPBELL	6-2021.00	R62

Preliminary Plans

MATCH EXIST BRIDGE

EXIST BRIDGE

MATCH EXIST BRIDGE

ALONG RT EDGE OF PAVEMENT

ALONG GA RAMP K TAPER

ALONG RT EDGE OF PAVEMENT

I-471 (NB)
RT EDGE OF PAVEMENT

VPI 215+87.50 Elev 642.93

VPI 216+90.00 Elev 639.52

MATCH EXIST BRIDGE

EXIST BRIDGE

VPI 219+97.54 Elev 629.73

VPI 222+75.00 Elev 621.15

VPI 223+50.00 Elev 618.70

VPI 225+00.00 Elev 613.95

VPI 225+49.98 Elev 612.30

VPI 228+24.93 Elev 603.28

-3.17%
-3.33%
-3.18%
-3.09%
-3.27%
-3.17%
-3.30%
-3.28%
-3.43%

Sta 216+90.85 End Full Superelevation (e = 2.0%) & Begin Runoff

Sta 218+40.85 Flat Section Rt End Runoff & Begin Runout

Sta 219+90.85 End Runout & Begin Normal Section

I-471 (NB)
PROFILE GRADE

SCALE: 1" = 50' HORIZONTAL
1" = 10' VERTICAL

PROFILE SHEET

I-471 NB STA 215+00 TO STA 230+00

FILE NAME: P:\CIVIL\471N\6-2021.00\CONTRACT PLANS AND PROPOSAL\CONTRACT PLAN SET\ROADWAY\R6620OPF.DGN
USER: tvonbehren
DATE PLOTTED: January 2, 2012
E-SHEET NAME:
MicroStation v8.11.7.443

COUNTY OF	ITEM NO.	SHEET NO.
CAMPBELL	6-2021.00	R63

DATUM 660 650 640 630 620 610 600 590 580 570

ALONG LT EDGE OF PAVEMENT

ALONG GA RAMP H TAPER

MATCH EXIST BRIDGE

EXIST BRIDGE

MATCH EXIST BRIDGE

I-471 (SB)
LT EDGE OF PAVEMENT

215+00	216+00	217+00	218+00	219+00	220+00	221+00	222+00	223+00	224+00	225+00	226+00	227+00	228+00	229+00	230+00
645.0 644.98	643.3 643.35	641.7 641.72	640.2 640.08	638.7 638.47	637.2 636.91	635.7 635.36	634.1 633.83	632.5 632.33	630.9 630.82	629.3 629.30	627.8 627.76	626.3 626.24	624.7 624.72	623.2 623.19	621.6 621.61	620.0 620.10	618.5 618.50	616.9 616.89	615.3 615.28	613.6 613.67	612.0 612.06	610.4 610.42	608.8 608.78	607.1 607.14	605.5 605.50	603.9 603.86	602.2 602.18	600.5 600.47	597.6 597.80	596.0 596.26

-3.26%

VPI 218+25.00
Elev 635.09

-3.17%

VPI 220+17.00
Elev 629.00

-3.04%

VPI 222+75.00
Elev 621.15

-3.22%

VPI 225+50.00
Elev 612.30

-3.28%

VPI 228+24.93
Elev 603.28

-3.42%

PVC 222+25.00
Elev 622.67

PVT 223+25.00
Elev 619.54

PVC 229+53.00
Elev 598.90

⌐ 100 FT
SD 6311 FT

Sta 216+90.85 End Full Superelevation (e = 2.0%) & Begin Runoff

Sta 218+40.85 Flat Section R+ End Runoff & Begin Runout

Sta 219+90.85 End Runout & Begin Normal Section

I-471 (SB)
PROFILE GRADE

SCALE: 1" = 50' HORIZONTAL
1" = 10' VERTICAL

SCALE: 1" = 50' HORIZONTAL
1" = 10' VERTICAL

215+00	216+00	217+00	218+00	219+00	220+00	221+00	222+00	223+00	224+00	225+00	226+00	227+00	228+00	229+00	230+00
645.7 645.70	644.1 644.07	642.5 642.44	640.8 640.80	639.2 639.17	637.5 637.54	635.9 635.91	634.3 634.30	632.7 632.71	631.1 631.13	629.5 629.54	628.0 628.00	626.5 626.48	625.0 624.96	623.4 623.43	621.9 621.91	620.3 620.34	618.7 618.74	617.1 617.13	615.5 615.52	613.9 613.91	612.3 612.30	610.6 610.66	609.0 609.02	607.4 607.38	605.7 605.74	604.1 604.10	602.4 602.42	600.7 600.71	599.0 599.00	597.3 597.25

PROFILE SHEET

I-471 SB STA 215+00 TO STA 230+00

Preliminary Plans

FILE NAME: P:\CIVIL\147IN6-2021.00\CONTRACT PLANS AND PROPOSAL\CONTRACT PLAN SET\ROADWAY\R6630OPF.DGN
USER: tvonbehren
DATE PLOTTED: January 2, 2012
E-SHEET NAME:
MicroStation v8.11.7.443

COUNTY OF	ITEM NO.	SHEET NO.
CAMPBELL	6-2021.00	R64

Preliminary Plans

STA 9+77.96
I-471 NB NOSE

LT EDGE OF PAVEMENT

See I-471 for Continuation

SPLINE GRADE

VPI 8+76.39
Elev 718.27

-3.52%

STA 8+76.39 - BEGIN
GA RAMP E

Sta 8+76.40 Full
Superelevation
(e = 6.0%)

Sta 12+78.80 End Runoff
& Begin Normal Section

-3.48%

VPI 13+75.00
Elev 700.50

Sta 12+03.80 End Full
Superelevation (e = 3.8%)
& Begin Runoff

PVC 13+00.00
Elev 703.11

L 150 FT
SD 10702 FT

PVT 14+50.00
Elev 697.82

-3.58%

PVC 18+60.00
Elev 683.15

Sta 20+21.44 End Normal
Section & Begin Runoff

L 400 FT
SD 2500 FT

VPI 20+60.00
Elev 676.00

Sta 21+80.25 End Runoff & Begin
Full Superelevation (e = 6.0%)

RT EDGE OF PAVEMENT
PROFILE GRADE

SCALE: 1" = 50' HORIZONTAL
1" = 10' VERTICAL

PROFILE
STA 7+00 TO STA 22+00 (GA RAMP E)

FILE NAME: P:\CIVIL\471\6-2021.00\CONTRACT PLANS AND PROPOSAL\CONTRACT PLAN SET\ROADWAY\R6640PF.DGN
USER: tvonbehren
DATE PLOTTED: January 2, 2012
E-SHEET NAME:
MicroStation v8.11.7.443

COUNTY OF	ITEM NO.	SHEET NO.
CAMPBELL	6-2021.00	R65

Preliminary Plans

MATCH EXIST BRIDGE

MATCH EXIST BRIDGE

LT EDGE OF PAVEMENT

L 400 FT
SD 2500 FT

SPLINE GRADE

-1.59%

PVT 22+60.00
Elev 672.82

EXIST BRIDGE

MATCH EXIST BRIDGE

Sta 24+16.66 End Full Superelevation
(e = 6.0%) & Begin Runoff

Sta 25+88.42 Flat Section End
Runoff (Bk) & Begin Runoff (Ahd)

Sta 27+60.18 End Runoff & Begin
Full Superelevation (e = 6.0%)

-4.94%

VPI 32+00.00
Elev 642.53

-5.02%

PVC 34+79.00
Elev 628.53

Sta 35+36.68 End Full Superelevation
(e = 6.0%) & Begin Runoff

L 300 FT
SD 774 FT

VPI 36+29.00
Elev 621.00

RT EDGE OF PAVEMENT
PROFILE GRADE

SCALE: 1" = 50' HORIZONTAL
1" = 10' VERTICAL

PROFILE
STA 22+00 TO STA 37+00 (GA RAMP E)

FILE NAME: P:\CIVIL\147\16-2021.00\CONTRACT PLANS AND PROPOSAL\CONTRACT PLAN SET\ROADWAY\R06500PF.DGN
USER: tvonbehren
DATE PLOTTED: January 2, 2012
E-SHEET NAME:
MicroStation v8.11.7.443

COUNTY OF	ITEM NO.	SHEET NO.
CAMPBELL	6-2021.00	R66

Preliminary Plans

LT EDGE OF PAVEMENT

STA 43+49.54
GRAND AVENUE NOSE

L 300 FT
SD 774 FT

SPLINE GRADE

L 100 FT
SD 1623 FT

-3.46%

-3.23%

-3.13%

-3.68%

PVT 37+79.00
Elev 615.81

PVC 40+11.00
Elev 607.78

VPI 40+61.00
Elev 606.05

PVT 41+11.00
Elev 604.44

VPI 41+50.00
Elev 603.18

VPI 43+68.45
Elev 596.10

STA 43+68.45 - END
GA RAMP E

Sta 37+16.68 Flat Section
End Runoff & Begin Runout

Sta 37+76.68 End Runout
& Begin Normal Section

Sta 43+00.00 End Normal
Section & Begin Transition
to Grand Ave

RT EDGE OF PAVEMENT
PROFILE GRADE

SCALE: 1" = 50' HORIZONTAL
1" = 10' VERTICAL

PROFILE
STA 37+00 TO STA 46+00 (GA RAMP E)

FILE NAME: P:\CIVIL\147\16-2021.00\CONTRACT PLANS AND PROPOSAL\CONTRACT PLAN SET\ROADWAY\R6660OPF.DGN
USER: tvonbehren
DATE PLOTTED: January 2, 2012
E-SHEET NAME:
MicroStation v8.11.7.443

COUNTY OF	ITEM NO.	SHEET NO.
CAMPBELL	6-2021.00	R67

Preliminary Plans

LT EDGE OF PAVEMENT

RT EDGE OF PAVEMENT
PROFILE GRADE

Sta 10+70.00 End Transition From Exist & Begin Full Superelevation (e = 5.9%)

Match Exist Pavement Elevations to Construct Island & Transition to Existing Grand Avenue

SPLINE GRADE

STA 7+47.52 - BEGIN GA RAMP F

VPI 7+47.52 Elev 561.11

VPI 11+50.00 Elev 585.41

VPI 13+50.00 Elev 595.29

Sta 13+04.71 End Full Superelevation (e = 5.9%) & Begin Runoff

Sta 14+25 End Runoff & Begin Normal Section

Sta 15+80.59 End Begin Normal Section & Begin Runoff

VPI 17+00.00 Elev 612.61

Sta 17+00.59 End Runoff & Begin Full Superelevation (e = 3.8%)

VPI 21+00.00 Elev 632.11

Sta 21+84.38 End Full Superelevation (e = 3.8%) & Begin Runoff

5.85%

5.31%

4.94%

4.87%

4.95%

4.95%

SCALE: 1" = 50' HORIZONTAL
1" = 10' VERTICAL

PROFILE
STA 7+50 TO STA 23+00 (GA RAMP F)

FILE NAME: P:\CIVIL\147\16-2021.00\CONTRACT PLANS AND PROPOSAL\CONTRACT PLAN SET\ROADWAY\R6670OPF.DGN
USER: tvonbehren
DATE PLOTTED: January 2, 2012
E-SHEET NAME:
MicroStation v8.11.7.443

COUNTY OF	ITEM NO.	SHEET NO.
CAMPBELL	6-2021.00	R68

Preliminary Plans

LT EDGE OF PAVEMENT

RT EDGE OF PAVEMENT
PROFILE GRADE

STA 38+03.28
I-471 SB NOSE

Sta 23+04.38 End Runoff
& Begin Normal Section

VPI 25+50.00
Elev 654.40

VPI 28+50.00
Elev 668.87

PVC 30+60.00
Elev 679.19

L 200 FT
SD 927 FT

VPI 31+60.00
Elev 684.10

Sta 32+55.36 End Normal
Section & Begin Runoff

PVT 32+60.00
Elev 687.71

Sta 33+12.20 End Runoff & Begin
Full Superelevation (e = 3.8%)

VPI 33+96.84
Elev 692.65

VPI 35+00.00
Elev 696.35

PVC 35+25.00
Elev 697.23

VPI 35+75.00
Elev 699.00

L 100 FT
SD 1086 FT

PVT 36+25.00
Elev 700.94

VPI 37+00.00
Elev 703.86

VPI 38+03.28
Elev 707.81

STA 38+03.28 - END
GA RAMP F

Sta 36+10.24 End Full
Superelevation (e = 3.8%)
& Begin Runoff

Sta 38+03.30 - Flat
Section & End Runoff

4.95%
4.82%
4.91%
3.61%
3.59%
3.53%
3.89%
3.83%

SCALE: 1" = 50' HORIZONTAL
1" = 10' VERTICAL

PROFILE
STA 23+00 TO STA 38+00 (GA RAMP F)

FILE NAME: P:\CIVIL\471\6-2021.00\CONTRACT PLANS AND PROPOSAL\CONTRACT PLAN SET\ROADWAY\R6800PF.DGN
USER: tvonbehren
DATE PLOTTED: January 2, 2012
E-SHEET NAME:
MicroStation v8.11.7.443

COUNTY OF	ITEM NO.	SHEET NO.
CAMPBELL	6-2021.00	R69

Preliminary Plans

STA 9+95.21
I-471 SB NOSE

GA RAMP H
LT EDGE OF PAVEMENT

7+00	8+00	9+00	10+00	11+00	12+00	13+00	14+00	15+00	16+00	17+00	18+00
			600.0 599.97	601.0 600.98	601.9 601.80	602.3 602.31	602.4 602.42	602.3 602.23	601.8 601.74	601.0 601.01	600.0 600.02	598.5 598.60	596.7 596.75	594.5 594.58	592.5 592.61	591.9 591.99	592.9 592.89	

STA 9+95.21 - BEGIN
GA RAMP H

VPI 9+95.21
Elev 599.25

2.78%

See I-471 for
Continuation

PVC 10+62.50
Elev 600.53

Sta 11+40.65 End Runoff
& Begin Full Superelevation
(e = 5.9%)

VPI 13+00.00
Elev 604.20

L 475 FT
SD 427 FT

Sta 14+20.28 End Full
Superelevation (e = 5.9%)
& Begin Runoff

-4.09%

VPI 15+50.00
Elev 593.98

PVC 15+78.00
Elev 592.87

-3.96%

PVT 15+37.50
Elev 594.49

Sta 15+80.28 End Runoff
& Begin Normal Section

L 140 FT
SD 119 FT

VPI 16+48.00
Elev 590.10

Sta 16+84.51 End Normal
Section & Begin Transition
to Grand Ave

Match Exist Pavement Elevations
to Construct Island & Transition
to Existing Grand Avenue

VPI 17+26.80
Elev 593.31

4.08%

PVT 17+18.00
Elev 592.95

Grand
Avenue

STA 17+26.80 - End
GA Ramp H

GA RAMP H
PROFILE GRADE

7+00	8+00	9+00	10+00	11+00	12+00	13+00	14+00	15+00	16+00	17+00	18+00
589.0	590.8	592.6	594.5	596.2	597.8	599.4 599.39	600.3 600.33	601.1 601.02	601.6 601.43	601.5 601.53	601.3 601.34	600.9 600.85	600.0 600.07	599.0 598.99	597.6 597.61	595.9 595.94	594.0 593.98	592.1 592.14	591.4 591.51	592.2 592.31	594.2

SCALE: 1" = 50' HORIZONTAL
1" = 10' VERTICAL

PROFILE SHEET

GA RAMP H STA 7+00 TO STA 18+00

FILE NAME: P:\CIVIL\147IN6-2021.00\CONTRACT PLANS AND PROPOSAL\CONTRACT PLAN SET\ROADWAY\R06900PF.DGN
USER: tvonbehren
DATE PLOTTED: January 2, 2012
E-SHEET NAME:
MicroStation v8.11.7.443

COUNTY OF	ITEM NO.	SHEET NO.
CAMPBELL	6-2021.00	R70

Preliminary Plans

LT EDGE OF PAVEMENT

STA 9+95.21
I-471 SB NOSE

RT EDGE OF PAVEMENT
PROFILE GRADE

PVT 22+20.00
Elev 647.50

VPI 22+37.00
Elev 646.75

VPI 23+00.00
Elev 643.72

-4.41%

-4.80%

-4.89%

L 540 FT
SD 363 FT

Sta 20+24.69 End Full Superelevation (e = 6.0%) & Begin Runoff

Sta 21+84.69 Flat Section End Runoff & Begin Runout

Sta 22+37.97 End Runout & Begin Normal Section

Sta 23+21.70 End Normal Section & Begin Runoff

Sta 24+05.70 End Runoff Full Superelevation (e = 5.0%)

PVC 26+30.00
Elev 627.57

VPI 27+50.00
Elev 621.70

L 240 FT
SD 1221 FT

PVT 28+70.00
Elev 618.37

VPI 28+80.25
Elev 618.09

-2.77%

-3.15%

SPLINE GRADE

Sta 30+00.00 End Full Superelevation (e = 5.0%) Begin Runoff

VPI 31+63.46
Elev 610.06

STA 31+63.46 - END
GA RAMP K

See I-471 for Continuation

SCALE: 1" = 50' HORIZONTAL
1" = 10' VERTICAL

PROFILE
STA 20+00 TO STA 32+00 (GA RAMP K)

FILE NAME: P:\CIVIL\471\6-2021.00\CONTRACT PLANS AND PROPOSAL\CONTRACT PLAN SET\ROADWAY\ROTOOOPF.DGN
USER: tvonbehren
DATE PLOTTED: January 2, 2012
E-SHEET NAME:
MicroStation v8.11.7.443

COUNTY OF	ITEM NO.	SHEET NO.
CAMPBELL	6-2021.00	R71

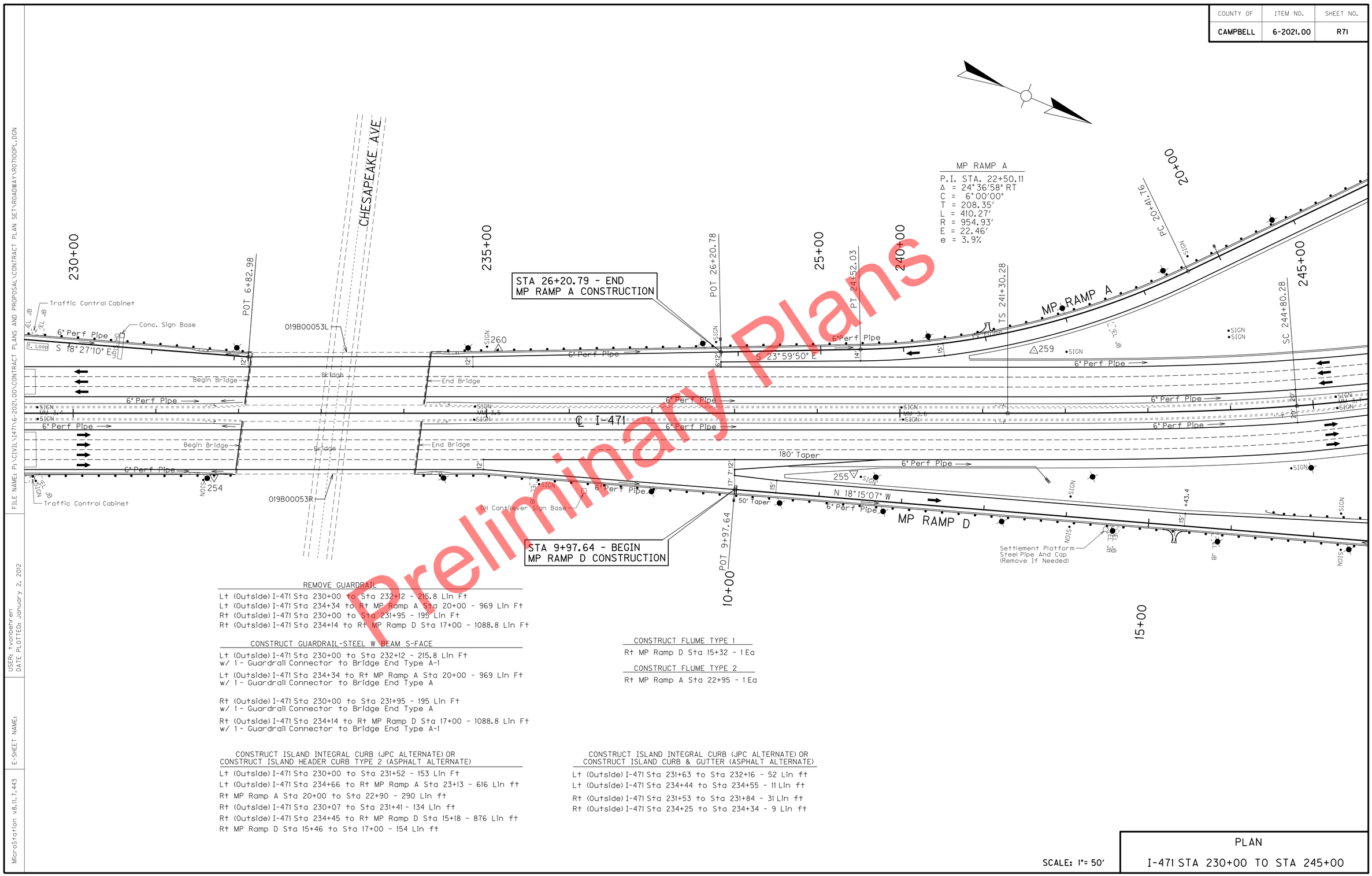

Preliminary Plans

REMOVE GUARDRAIL

Lt (Outside) I-471 Sta 230+00 to Sta 232+12 - 215.8 Lin Ft
Lt (Outside) I-471 Sta 234+34 to Rt MP Ramp A Sta 20+00 - 969 Lin Ft
Rt (Outside) I-471 Sta 230+00 to Sta 231+95 - 195 Lin Ft
Rt (Outside) I-471 Sta 234+14 to Rt MP Ramp D Sta 17+00 - 1088.8 Lin Ft

CONSTRUCT GUARDRAIL-STEEL W BEAM S-FACE

Lt (Outside) I-471 Sta 230+00 to Sta 232+12 - 215.8 Lin Ft
w/ 1 - Guardrail Connector to Bridge End Type A-1

Lt (Outside) I-471 Sta 234+34 to Rt MP Ramp A Sta 20+00 - 969 Lin Ft
w/ 1 - Guardrail Connector to Bridge End Type A

Rt (Outside) I-471 Sta 230+00 to Sta 231+95 - 195 Lin Ft
w/ 1 - Guardrail Connector to Bridge End Type A

Rt (Outside) I-471 Sta 234+14 to Rt MP Ramp D Sta 17+00 - 1088.8 Lin Ft
w/ 1 - Guardrail Connector to Bridge End Type A-1

CONSTRUCT ISLAND INTEGRAL CURB (JPC ALTERNATE) OR
CONSTRUCT ISLAND HEADER CURB TYPE 2 (ASPHALT ALTERNATE)

Lt (Outside) I-471 Sta 230+00 to Sta 231+52 - 153 Lin Ft
Lt (Outside) I-471 Sta 234+66 to Rt MP Ramp A Sta 23+13 - 616 Lin ft
Rt MP Ramp A Sta 20+00 to Sta 22+90 - 290 Lin ft
Rt (Outside) I-471 Sta 230+07 to Sta 231+41 - 134 Lin ft
Rt (Outside) I-471 Sta 234+45 to Rt MP Ramp D Sta 15+18 - 876 Lin ft
Rt MP Ramp D Sta 15+46 to Sta 17+00 - 154 Lin ft

CONSTRUCT FLUME TYPE 1

Rt MP Ramp D Sta 15+32 - 1 Ea

CONSTRUCT FLUME TYPE 2

Rt MP Ramp A Sta 22+95 - 1 Ea

CONSTRUCT ISLAND INTEGRAL CURB (JPC ALTERNATE) OR
CONSTRUCT ISLAND CURB & GUTTER (ASPHALT ALTERNATE)

Lt (Outside) I-471 Sta 231+63 to Sta 232+16 - 52 Lin ft
Lt (Outside) I-471 Sta 234+44 to Sta 234+55 - 11 Lin ft
Rt (Outside) I-471 Sta 231+53 to Sta 231+84 - 31 Lin ft
Rt (Outside) I-471 Sta 234+25 to Sta 234+34 - 9 Lin ft

SCALE: 1"= 50'

PLAN

I-471 STA 230+00 TO STA 245+00

FILE NAME: P:\CIVIL\147\N6-2021.00\CONTRACT PLANS AND PROPOSAL\CONTRACT PLAN SET\ROADWAY\R0710OPL.DGN
USER: tvonbehren
DATE PLOTTED: January 2, 2012
E-SHEET NAME:
MicroStation v8.11.7.443

COUNTY OF	ITEM NO.	SHEET NO.
CAMPBELL	6-2021.00	R72

ALONG RT EDGE OF PAVEMENT

ALONG MP RAMP D TAPER

ALONG RT EDGE OF PAVEMENT

MATCH EXIST BRIDGE

EXIST BRIDGE

MATCH EXIST BRIDGE

I-471 (NB)
RT EDGE OF PAVEMENT

VPI 230+27.95
Elev 596.32

-3.43%

-4.03%

VPI 232+03.50
Elev 589.25

MATCH EXIST BRIDGE

-3.92%

EXIST BRIDGE

VPI 234+20.61
Elev 580.75

MATCH EXIST BRIDGE

-3.90%

VPI 236+68.20
Elev 571.11

Sta 239+55.28 End Normal Section & Begin Runout

-4.00%

VPI 241+10.90
Elev 553.38

Sta 241+30.28 Flat Section At End Runout & Begin Runoff

Sta 243+05.28 Reverse Crown

-4.07%

VPI 244+50.00
Elev 539.56

-3.78%

Sta 244+80.28 End Runoff & Begin Full Superelevation (e = 4.0%)

I-471 (NB)
PROFILE GRADE

SCALE: 1" = 50' HORIZONTAL
1" = 10' VERTICAL

PROFILE SHEET

I-471 NB STA 230+00 TO STA 245+00

Preliminary Plans

FILE NAME: P:\CIVIL\147IN6-2021.00\CONTRACT PLANS AND PROPOSAL\CONTRACT PLAN SET\ROADWAY\R0720PF.DGN
USER: tvonbehren
DATE PLOTTED: January 2, 2012
E-SHEET NAME:
MicroStation v8.11.7.443

COUNTY OF	ITEM NO.	SHEET NO.
CAMPBELL	6-2021.00	R73

ALONG GA RAMP H TAPER | ALONG LT EDGE OF AUXILARY LANE | ALONG MP RAMP A TAPER | ALONG LT EDGE OF PAVEMENT

EXIST BRIDGE

MATCH EXIST BRIDGE

MATCH EXIST BRIDGE

I-471 (SB)
LT EDGE OF PAVEMENT

L 150 FT
SD 1866 FT

VPI 230+28.00
Elev 596.34

PVT 231+03.00
Elev 593.33

-4.02%

VPI 232+09.00
Elev 589.07

MATCH EXIST BRIDGE

-3.93%

EXIST BRIDGE

VPI 234+26.00
Elev 580.55

MATCH EXIST BRIDGE

-3.90%

VPI 236+68.20
Elev 571.11

-4.06%

VPI 238+25.00
Elev 564.74

-3.95%

VPI 239+75.00
Elev 558.81

-4.00%

VPI 241+10.90
Elev 553.38

-4.29%

VPI 244+50.26
Elev 538.82

-3.75%

I-471 (SB)
PROFILE GRADE

SCALE: 1" = 50' HORIZONTAL
1" = 10' VERTICAL

PROFILE SHEET

I-471 SB STA 230+00 TO STA 245+00

Preliminary Plans

FILE NAME: P:\CIVIL\147IN6-2021.00\CONTRACT PLANS AND PROPOSAL\CONTRACT PLAN SET\ROADWAY\R0730OPF.DGN
USER: tvonbehren
DATE PLOTTED: January 2, 2012
E-SHEET NAME:
MicroStation v8.11.7.443

COUNTY OF	ITEM NO.	SHEET NO.
CAMPBELL	6-2021.00	R74

Preliminary Plans

STA 10+64.66 - BEGIN
MP RAMP A CONSTRUCTION

STA 26+20.79 - END
MP RAMP A CONSTRUCTION

STA 19+27.80 - END
MP RAMP D CONSTRUCTION

STA 10+32.80 - BEGIN
MP RAMP M CONSTRUCTION

STA 21+11.20 - END
MP RAMP M CONSTRUCTION

STA 10+64.66 - BEGIN
MP RAMP A CONSTRUCTION

MP RAMP A
S 48°36'48" E
6" Perf Pipe

I-471
P.I. STA. 248+84.25
Δ = 28°19'48" LT
C = 2°30'00"
Ts = 753.96'
Ls = 350.00'
Lc = 783.20'
θ = 4°22'30"
L.T. = 233.40'
S.T. = 116.73'
R = 2291.83'
E = 74.16'
e = 4%
Runout = 175'

LOW WIRE CLEARANCE TABLE

LOCATION			
A	B	C	D
43.3'	40.4'	40.5'	44.1'

MP RAMP N
P.I. STA. 14+30.53
Δ = 19°24'05" RT
C = 8°00'00"
T = 122.43'
L = 242.52'
R = 716.20'
E = 10.39'
e = 5.6%

LOW WIRE CLEARANCE TABLE

LOCATION				
E	F	G	H	I
60.1'	59.0'	58.9'	59.7'	63.0'

MEMORIAL PARKWAY
S 27°21'12" E
6" Perf Pipe

MP RAMP N
S 46°45'17" E
6" Perf Pipe

MP RAMP D
6" Perf Pipe

MP RAMP M
N 73°39'04" W
6" Perf Pipe

N 42°10'26" W
6" Perf Pipe

N 52°21'36" W
6" Perf Pipe

MP RAMP M
P.I. STA. 14+34.05
Δ = 31°28'38" LT
C = 10°00'00"
T = 161.47'
L = 314.77'
R = 572.96'
E = 22.32'
e = 4.8%

MP RAMP M
P.I. STA. 18+57.32
Δ = 21°17'28" RT
C = 10°00'00"
T = 107.70'
L = 212.91'
R = 572.96'
E = 10.03'
e = 4.8%

Face Memorial Parkway Bridge Abutment
Face CSX RR Bridge Abutment
Concrete Slope Wall
Traffic Signal Pole
6" Non-Perf Pipe
Traffic Loops
Reconstruct Island (341 LF) & Island Surface (471 SY), See Typical Sections.
Reconstruct Island (277 LF) & Island Surface (353 SY), See Typical Sections.
Reconstruct Island (159 LF) & Island Surface (123 SY), See Typical Sections.
Remove Island (Pave Flush)
ARTIMIS Pole with Camera
Traffic Control Cabinet
CSX RAILROAD
Last Column
First Column
End Split Wall - Begin Solid Wall

REMOVE GUARDRAIL

Rt (Outside) I-471 Sta 256+03 to Sta 260+00 - 397 Lin Ft
Rt MP Ramp D Sta 17+00 to Sta 19+00 - 223.7 Lin Ft
Lt MP Ramp D Sta 16+41 to Sta 19+34 - 300 Lin Ft
Lt MP Ramp M Sta 11+14 to Sta 13+12 - 237.5 Lin Ft
Rt MP Ramp A Sta 15+40 to Sta 20+00 - 456 Lin Ft
Lt MP Ramp A Sta 13+07 to Sta 13+35 - 170 Lin Ft
Lt MP Ramp N Sta 12+06 to Sta 16+82 - 487.5 Lin Ft
Rt MP Ramp N Sta 10+00 to Sta 15+76 - 667.5 Lin Ft

CONSTRUCT GUARDRAIL-STEEL W BEAM S-FACE

Rt (Outside) I-471 Sta 256+03 to Sta 260+00 - 359.5 Lin Ft
w/ 1 - Guardrail End Treatment Type 4A

Rt MP Ramp D Sta 17+00 to Sta 19+00 - 223.7 Lin Ft
w/ Connect to Existing Guardrail

Lt MP Ramp D Sta 16+41 to Sta 19+34 - 262.5 Lin Ft
w/ 1 - Guardrail End Treatment Type 4A &
1 - Connect to Existing Guardrail

Lt MP Ramp M Sta 11+14 to Sta 13+12 - 237.5 Lin Ft
w/ Connect to Existing Guardrail &
1 - Guardrail End Treatment Type 2A

Rt MP Ramp A Sta 15+41 to Sta 20+00 - 418.5 Lin Ft
w/ 1 - Guardrail End Treatment Type 4A

Rt MP Ramp A Sta 13+07 to Sta 13+35 - 170 Lin Ft
w/ 1 - Guardrail End Treatment Type 2A &
1 - Connect To Existing Guardrail

Lt MP Ramp N Sta 12+06 to Sta 16+82 - 450 Lin Ft
w/ 1 - Guardrail End Treatment Type 4A &
1 - Connect To Existing Guardrail

Rt MP Ramp N Sta 10+00 to Sta 15+76 - 667.5 Lin Ft
w/ 1 - Connect To Existing Guardrail

CONSTRUCT FLUME TYPE 2

Rt MP RAMP A Sta 15+96 - 1 Ea

CONSTRUCT ISLAND INTEGRAL CURB (JPC ALTERNATE) OR
CONSTRUCT ISLAND HEADER CURB TYPE 2 (ASPHALT ALTERNATE)

Rt MP Ramp A Sta 15+84 to Sta 15+91 - 7 Lin ft
Rt MP Ramp A Sta 16+14 to Sta 20+00 - 386 Lin ft
Rt MP Ramp D Sta 17+00 to Sta 18+41 - 141 Lin ft

SCALE: 1"= 50'

PLAN

I-471 STA 245+00 TO STA 260+00

FILE NAME: P:\CIVIL\147\N6-2021.00\CONTRACT PLANS AND PROPOSAL\CONTRACT PLAN SET\ROADWAY\R0740OPL.DGN
USER: tvonbehren
DATE PLOTTED: January 2, 2012
E-SHEET NAME:
MicroStation v8.11.7.443

COUNTY OF	ITEM NO.	SHEET NO.
CAMPBELL	6-2021.00	R75

ALONG RT EDGE OF PAVEMENT

ALONG MP RAMP M TAPER

I-471 (NB)
RT EDGE OF PAVEMENT

Preliminary Plans

L 100 FT
SD 2350 FT

VPI 245+50.00
Elev 535.79

-3.78%

-3.59%

VPI 246+75.00
Elev 531.30

PVC 246+25.00
Elev 533.09

PVT 247+25.00
Elev 529.27

-4.06%

VPI 248+00.00
Elev 526.23

-3.90%

PVC 248+18.38
Elev 525.51

L 860 FT
SD 716 FT

Sta 252+63.48 End Full Superelevation (e = 4.0%) & Begin Runoff

VPI 252+48.38
Elev 508.73

Sta 254+38.48 Reverse Crown

Sta 256+13.48 Flat Section Rt End Runoff & Begin Runout

PVT 256+78.38
Elev 512.90

0.97%

VPI 257+00.00
Elev 513.11

1.23%

Sta 257+88.48 End Runout & Begin Normal Section

VPI 258+00.00
Elev 514.35

1.13%

VPI 259+50.00
Elev 516.05

1.10%

I-471 (NB)
PROFILE GRADE

SCALE: 1" = 50' HORIZONTAL
1" = 10' VERTICAL

PROFILE SHEET

I-471 NB STA 245+00 TO STA 260+00

FILE NAME: P:\CIVIL\471N6-2021.00\CONTRACT PLANS AND PROPOSAL\CONTRACT PLAN SET\ROADWAY\R0750PF.DGN
USER: tvonbehren
DATE PLOTTED: January 2, 2012
E-SHEET NAME:
MicroStation v8.11.7.443

COUNTY OF	ITEM NO.	SHEET NO.
CAMPBELL	6-2021.00	R76

Preliminary Plans

I-471 (SB)
LT EDGE OF PAVEMENT

I-471 (SB)
PROFILE GRADE

-3.75%
-3.91%
-3.96%
1.16%
1.36%
1.19%
0.99%

VPI 246+50.12
Elev 531.32

VPI 248+00.00
Elev 525.46

PVC 248+22.32
Elev 524.58

VPI 252+47.32
Elev 507.74

L 850 FT
SD 679 FT

Sta 252+63.48 End Full Superelevation (e = 4.0%) & Begin Runoff

Sta 254+38.48 Reverse Crown

Sta 256+13.48 Flat Section Rt End Runoff & Begin Runout

PVT 256+72.32
Elev 512.67

VPI 257+00.00
Elev 513.00

VPI 257+50.00
Elev 513.68

Sta 257+88.48 End Runout & Begin Normal Section

VPI 259+50.00
Elev 516.05

SCALE: 1" =
1" =
HORIZONTAL
VERTICAL

PROFILE SHEET

SB I-471 STA 245+00 TO STA 260+00

MicroStation v8.11.7.443
E-SHEET NAME:
USER: tvonbehren
DATE PLOTTED: January 2, 2012
FILE NAME: P:\CIVIL\147IN6-2021.00\CONTRACT PLANS AND PROPOSAL\CONTRACT PLAN SET\ROADWAY\R0760PF.DGN

COUNTY OF	ITEM NO.	SHEET NO.
CAMPBELL	6-2021.00	R77

Preliminary Plans

LT EDGE OF PAVEMENT

RT EDGE OF PAVEMENT
PROFILE GRADE

Match Exist Pavement Elevations
to Construct Island & Transition
to Existing Memorial Parkway

STA 10+64.66 - BEGIN
MP RAMP A

MEMORIAL PARKWAY

VPI 10+64.66
Elev 531.98

VPI 11+00.00
Elev 531.04

VPI 12+00.00
Elev 529.02

VPI 15+40.00
Elev 520.90

VPI 18+77.50
Elev534.52

VPI 19+50.00
Elev 537.45

-2.65%
-2.02%
-2.39%
4.04%
4.43%

L 675 FT
SD 459 FT

PVC 12+02.50
Elev528.96

Sta 12+99.9 End Transition From
Exist & Begin Normal Section

Sta 19+66.76 End Normal
Section & Begin Runoff

SCALE: 1" = 50' HORIZONTAL
1" = 10' VERTICAL

PROFILE
STA 10+00 TO STA 20+00 (MP RAMP A)

MicroStation v8.11.7.443
E-SHEET NAME:
USER: tvonbehren
DATE PLOTTED: January 2, 2012
FILE NAME: P:\CIVIL\147\6-2021.00\CONTRACT PLANS AND PROPOSAL\CONTRACT PLAN SET\ROADWAY\R0770PF.DGN

COUNTY OF	ITEM NO.	SHEET NO.
CAMPBELL	6-2021.00	R78

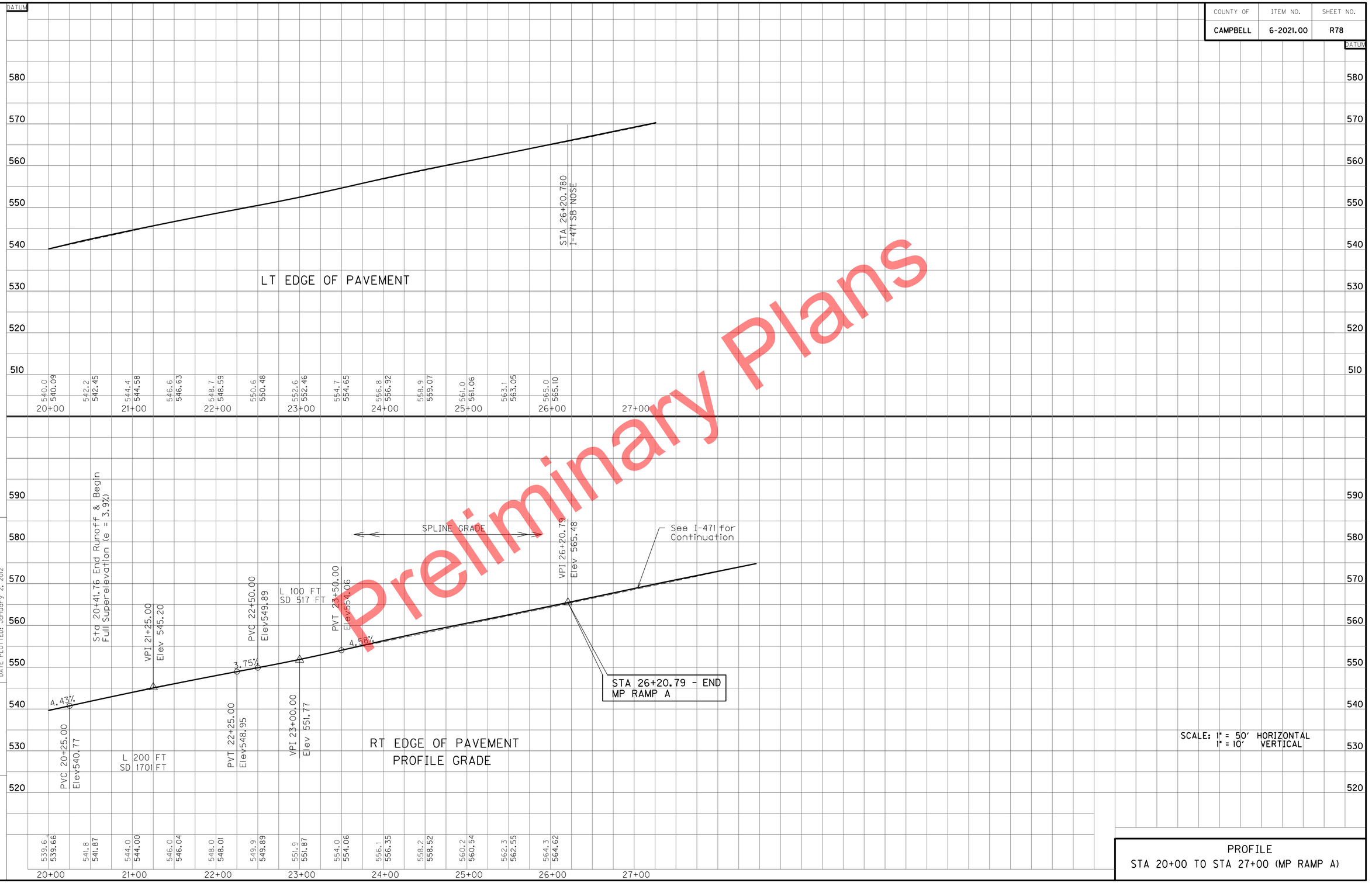

Preliminary

SCALE: 1" = 50' HORIZONTAL
1" = 10' VERTICAL

PROFILE
STA 20+00 TO STA 27+00 (MP RAMP A)

FILE NAME: P:\CIVIL\471\6-2021.00\CONTRACT PLANS AND PROPOSAL\CONTRACT PLAN SET\ROADWAY\R078OPF.DGN
USER: tvonbehren
DATE PLOTTED: January 2, 2012
E-SHEET NAME:
MicroStation v8.11.7.443

COUNTY OF	ITEM NO.	SHEET NO.
CAMPBELL	6-2021.00	R79

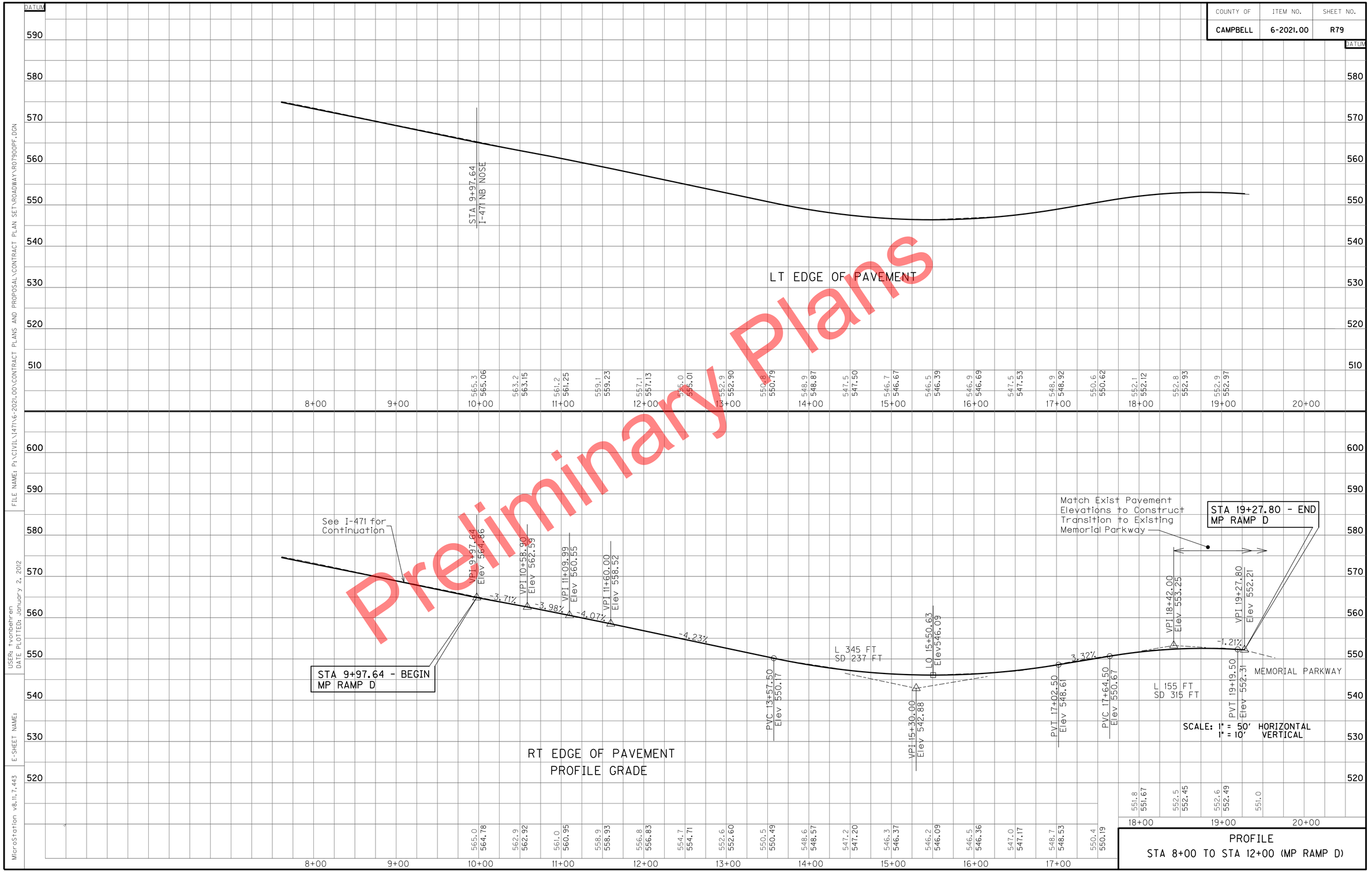

Preliminary Plans

PROFILE
STA 8+00 TO STA 12+00 (MP RAMP D)

FILE NAME: P:\CIVIL\471\6-2021.00\CONTRACT PLANS AND PROPOSAL\CONTRACT PLAN SET\ROADWAY\R079OPF.DGN
USER: tvanbehren
DATE PLOTTED: January 2, 2012
E-SHEET NAME:
MicroStation v8.11.7.443

COUNTY OF	ITEM NO.	SHEET NO.
CAMPBELL	6-2021.00	R80

DATUM 560 550 540 530 520 510 500 490 480

10+00 11+00 12+00 13+00 14+00 15+00 16+00 17+00 18+00 19+00 20+00 21+00 22+00

547.6 547.48 | 544.5 544.56 | 541.9 541.72 | 538.8 538.75 | 535.9 535.85 | 533.3 533.22 | 530.8 530.80 | 528.4 528.37 | 525.9 525.94 | 523.5 523.48 | 521.0 521.11 | 518.7 519.09 | 516.2 517.37 | 516.0 515.96 | 514.3 514.86 | 514.1 514.05 | 513.5 513.37 | 513.0 512.82 | 512.6 512.57 | 512.6 512.57 | 512.9 512.71 | 513.2 512.99

LT EDGE OF PAVEMENT

STA 21+11.20
I-471 NB NOSE

Preliminary Plans

570 560 550 540 530 520 510 500 490

Match Exist Pavement Elevations
to Construct Island & Transition
to Existing Memorial Parkway

MEMORIAL PARKWAY

VPI 10+32.80
Elev 547.55

STA 10+32.80 - BEGIN
MP RAMP M

-5.00%

Sta 12+72.58 End Transition From
Exist & Begin Full Superelevation
(e = 4.80%)

Sta 15+25 End Full Superelevation
(e = 4.80%) & Begin Runoff

PVC 15+37.50
Elev 522.32

Sta 16+69 Flat Section End
Runoff Bk & Begin Runoff Ahd

L 325 FT
SD 382 FT

VPI 17+00.00
Elev 514.20

RT EDGE OF PAVEMENT
PROFILE GRADE

-1.04%

PVT 18+62.50
Elev 512.51

Sta 19+40 End Full Superelevation
(e = 4.80%) & Begin Runoff To
I-471 NB Taper

SPLINE GRADE

0.89%

VPI 21+11.20
Elev 512.93

STA 21+11.20 - END
MP RAMP M

SCALE: 1" = 50' HORIZONTAL
1" = 10' VERTICAL

548.6 | 546.7 546.69 | 544.1 544.19 | 541.6 541.69 | 539.2 539.19 | 536.7 536.69 | 534.2 534.19 | 531.6 531.69 | 529.2 529.19 | 526.7 526.70 | 524.2 524.20 | 521.7 521.71 | 519.1 519.44 | 517.3 517.47 | 515.8 515.81 | 514.5 514.45 | 513.5 513.40 | 512.8 512.65 | 512.3 512.12 | 512.0 511.92 | 512.1 512.10 | 512.6 512.40 | 513.0 512.83 | 513.4 | 513.8 | 514.5

10+00 11+00 12+00 13+00 14+00 15+00 16+00 17+00 18+00 19+00 20+00 21+00 22+00

PROFILE
STA 10+00 TO STA 22+00 (MP RAMP M)

FILE NAME: P:\CIVIL\147\16-2021.00\CONTRACT PLANS AND PROPOSAL\CONTRACT PLAN SET\ROADWAY\R80000PF.DGN
USER: tvonbehren
DATE PLOTTED: January 2, 2012
E-SHEET NAME:
MicroStation v8.11.7.443

COUNTY OF	ITEM NO.	SHEET NO.
CAMPBELL	6-2021.00	R81

DATUM

550 540 530 520 510 500 490 480

518.15 517.60 516.95 516.92 516.29 516.27 515.75 515.73 515.22 515.24 514.64 514.83 514.68 514.94 515.64 515.75 517.32 517.26 519.75 519.68 522.46 522.47 525.11 525.19 527.66 527.73 529.89 530.07 531.66 531.60 532.36 532.22 532.31 532.32

8+00 9+00 10+00 11+00 12+00 13+00 14+00 15+00 16+00 17+00

STA 9+82.68
I-471 SB NOSE

LT EDGE OF PAVEMENT

Preliminary Plans

570 560 550 540 530 520 510 500 490

520.4 519.8 519.1 518.5 518.0 517.4 517.41 516.7 516.65 515.9 515.94 515.5 515.40 514.9 514.94 514.5 514.53 514.5 514.64 515.4 515.45 516.9 516.94 519.1 519.12 521.6 521.58 524.1 524.04 526.5 526.50 528.7 528.76 530.4 530.41 531.6 531.44 531.9 531.85 531.8

6+00 7+00 8+00 9+00 10+00 11+00 12+00 13+00 14+00 15+00 16+00 17+00

SPLINE GRADE

STA 8+51.20 - BEGIN
MP RAMP N

VPI 8+51.20
Elev 517.40

L 210 FT
SD 200 FT

Match Exist Pavement Elevations
to Construct Island & Transition
to Existing Memorial Parkway

VPI 15+65.00
Elev 532.16

VPI 16+78.50
Elev 531.82

-0.30%

MEMORIAL PARKWAY

4.92%

-0.87%

EXIST BRIDGE

MATCH EXIST
BRIDGE

PVC 10+85.00
Elev 514.63

VPI 11+90.00
Elev 513.71

Sta 9+25 End Transition From
Bridge & Begin Normal Section

Sta 12+60 End Normal
Section & Begin Runoff

PVT 12+95.00
Elev 518.88

Sta 13+80 End Runoff & Begin
Full Superelevation (e = 5.6%)

PVC 14+60.00
Elev 526.99

Sta 13+80 End Runoff & Begin
Full Superelevation (e = 5.6%)

L 210 FT
SD 312 FT

PVT 16+70.00
Elev 531.84

STA 16+78.50 - END
MP RAMP N

RT EDGE OF PAVEMENT
PROFILE GRADE

SCALE: 1" = 50' HORIZONTAL
1" = 10' VERTICAL

PROFILE
STA 6+00 TO STA 17+00 (MP RAMP N)

FILE NAME: P:\CIVIL\471\6-2021.00\CONTRACT PLANS AND PROPOSAL\CONTRACT PLAN SET\ROADWAY\R081OPF.DGN
USER: tvonbehren
DATE PLOTTED: January 2, 2012
E-SHEET NAME:
MicroStation v8.11.7.443

COUNTY OF	ITEM NO.	SHEET NO.
CAMPBELL	6-2021.00	R82

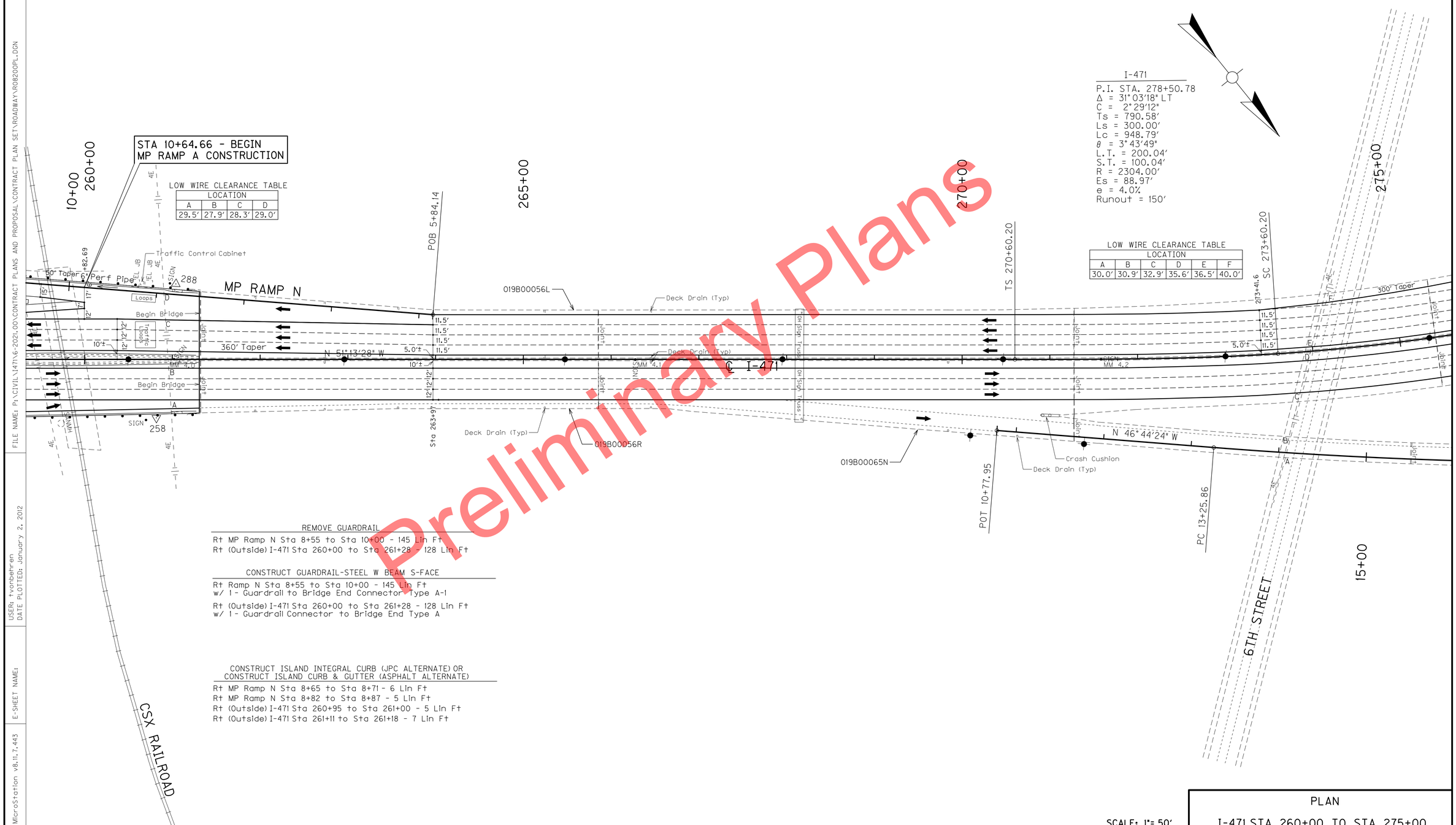

LOW WIRE CLEARANCE TABLE

LOCATION			
A	B	C	D
29.5'	27.9'	28.3'	29.0'

LOW WIRE CLEARANCE TABLE

LOCATION					
A	B	C	D	E	F
30.0'	30.9'	32.9'	35.6'	36.5'	40.0'

I-471

P.I. STA. 278+50.78
Δ = 31°03'18" LT
C = 2°29'12"
Ts = 790.58'
Ls = 300.00'
Lc = 948.79'
θ = 3°43'49"
L.T. = 200.04'
S.T. = 100.04'
R = 2304.00'
Es = 88.97'
e = 4.0%
Runout = 150'

REMOVE GUARDRAIL

Rt MP Ramp N Sta 8+55 to Sta 10+00 - 145 Lin Ft
Rt (Outside) I-471 Sta 260+00 to Sta 261+28 - 128 Lin Ft

CONSTRUCT GUARDRAIL-STEEL W BEAM S-FACE

Rt Ramp N Sta 8+55 to Sta 10+00 - 145 Lin Ft
w/ 1 - Guardrail to Bridge End Connector Type A-1

Rt (Outside) I-471 Sta 260+00 to Sta 261+28 - 128 Lin Ft
w/ 1 - Guardrail Connector to Bridge End Type A

CONSTRUCT ISLAND INTEGRAL CURB (JPC ALTERNATE) OR
CONSTRUCT ISLAND CURB & GUTTER (ASPHALT ALTERNATE)

Rt MP Ramp N Sta 8+65 to Sta 8+71 - 6 Lin Ft
Rt MP Ramp N Sta 8+82 to Sta 8+87 - 5 Lin Ft
Rt (Outside) I-471 Sta 260+95 to Sta 261+00 - 5 Lin Ft
Rt (Outside) I-471 Sta 261+11 to Sta 261+18 - 7 Lin Ft

Preliminary Plans

SCALE: 1"= 50'

PLAN

I-471 STA 260+00 TO STA 275+00

FILE NAME: P:\CIVIL\I471\6-2021.00\CONTRACT PLANS AND PROPOSAL\CONTRACT PLAN SET\ROADWAY\R08200PL.DGN
USER: tvonbehren
DATE PLOTTED: January 2, 2012
E-SHEET NAME:
MicroStation v8.11.7.443

COUNTY OF	ITEM NO.	SHEET NO.
CAMPBELL	6-2021.00	R83

Preliminary Plans

ALONG MP RAMP M TAPER

ALONG RT EDGE OF PAVEMENT

EXIST BRIDGE

MATCH EXIST BRIDGE

I-471 (NB)
RT EDGE OF PAVEMENT

EXIST BRIDGE

VPI 260+28.46 Elev 516.91

VPI 260+82.40 Elev 517.44

VPI 261+35.83 Elev 517.99

VPI 262+50.00 Elev 519.25

VPI 263+50.00 Elev 520.33

VPI 264+00.00 Elev 520.86

VPI 268+00.00 Elev 525.20

Sta 269+10.20 End Normal Section & Begin Runout

Sta 270+60.20 Flat Section R+ End Runout & Begin Runoff

Sta 272+10.20 Reverse Crown

VPI 273+09.17 Elev 530.72

Sta 273+60.20 End Runoff & Begin Full Superelevation (e = 4.0%)

1.10% 0.98% 1.02% 1.11% 1.07% 1.08% 1.08% 1.09%

EXIST BRIDGE

L 425 FT
SD 654 FT

SCALE: 1" = 50' HORIZONTAL
1" = 10' VERTICAL

I-471 (NB)
PROFILE GRADE

PROFILE SHEET

I-471 NB STA 260+00 TO STA 275+00

FILE NAME: P:\CIVIL\147IN6-2021.00\CONTRACT PLANS AND PROPOSAL\CONTRACT PLAN SET\ROADWAY\R083OPF.DGN
USER: tvonbehren
DATE PLOTTED: January 2, 2012
E-SHEET NAME:
MicroStation v8.11.7.443

COUNTY OF	ITEM NO.	SHEET NO.
CAMPBELL	6-2021.00	R84

DATUM

ALONG LT EDGE OF PAVEMENT

ALONG MP RAMP N TAPER

MATCH EXIST BRIDGE

EXIST BRIDGE

EXIST BRIDGE

I-471 (SB)
LT EDGE OF PAVEMENT

550 540 530 520 510 500 490 480

260+00 261+00 262+00 263+00 264+00 265+00 266+00 267+00 268+00 269+00 270+00 271+00 272+00 273+00 274+00 275+00

516.4 516.30 | 516.9 516.81 | 517.3 517.40 | 517.9 517.94 | 518.5 518.41 | 519.1 518.97 | 519.6 519.50 | 520.1 520.03 | 520.6 520.55 | 521.1 520.87 | 521.7 521.41 | 522.2 521.95 | 522.8 522.49 | 523.3 523.03 | 523.9 523.57 | 524.4 524.10 | 524.9 524.64 | 525.4 525.13 | 525.8 525.62 | 526.3 526.04 | 526.7 526.45 | 527.1 526.86 | 527.4 527.27 | 527.7 527.61 | 527.7 527.77 | 527.6 527.59 | 527.4 527.21 | 527.0 526.67 | 526.5 526.26 | 526.1 525.81 | 525.5 525.29

Sta 260+50 End Normal Section & Begin Transition to Bridge

Sta 261+30.61 End Transition From End of Bridge & Begin Normal Section

Sta 270+60.20 Flat Section R+ End Runout & Begin Runoff

Sta 272+10.20 Reverse Crown

Sta 273+60.20 End Runoff & Begin Full Superelevation (e = 4.0%)

VPI 260+28.72 Elev 516.83

VPI 260+80.49 Elev 517.36

VPI 261+36.86 Elev 517.95

VPI 262+50.00 Elev 519.21

VPI 263+50.00 Elev 520.26

VPI 264+00.00 Elev 520.79

VPI 268+00.47 Elev 525.11

VPI 273+09.03 Elev 530.06

0.99% 1.02% 1.04% 1.11% 1.05% 1.06% 1.08% 0.97%

EXIST BRIDGE

L 425 FT
SD 690 FT

SCALE: 1" =
1" =

HORIZONTAL
VERTICAL

I-471 (SB)
PROFILE GRADE

516.6 516.54 | 517.1 517.05 | 517.5 517.56 | 518.1 518.09 | 518.7 518.65 | 519.2 519.21 | 519.7 519.73 | 520.2 520.26 | 520.8 520.79 | 521.3 521.33 | 521.9 521.87 | 522.4 522.41 | 523.0 522.95 | 523.5 523.49 | 524.0 524.03 | 524.6 524.57 | 525.1 525.10 | 525.6 525.59 | 526.0 526.08 | 526.5 526.57 | 527.0 527.05 | 527.5 527.54 | 528.0 528.02 | 528.5 528.44 | 528.7 528.71 | 528.9 528.86

528.9 528.87 | 528.7 528.75 | 528.4 528.49 | 528.1 528.11 | 527.6 527.59

273+00 274+00 275+00

PROFILE SHEET

SB I-471 STA 260+00 TO STA 275+00

Preliminary Plans

FILE NAME: P:\CIVIL\147IN6-2021.00\CONTRACT PLANS AND PROPOSAL\CONTRACT PLAN SET\ROADWAY\R0840PF.DGN
USER: tvonbehren
DATE PLOTTED: January 2, 2012
E-SHEET NAME:
MicroStation v8.11.7.443

COUNTY OF	ITEM NO.	SHEET NO.
CAMPBELL	6-2021.00	R85

FILE NAME: P:\CIVIL\147\N6-2021.00\CONTRACT PLANS AND PROPOSAL\CONTRACT PLAN SET\ROADWAY\R085OOPL.DGN
USER: tvonbehren
DATE PLOTTED: January 2, 2012
E-SHEET NAME:
MicroStation v8.11.7.443

Preliminary Plans

I-471

P.I. STA. 278+50.78
Δ = 31°03'18" LT
C = 2°29'12"
Ts = 790.58'
Ls = 300.00'
Lc = 948.79'
θ = 3°43'49"
L.T. = 200.04'
S.T. = 100.04'
R = 2304.00'
Es = 88.97'
e = 4.0%
Runout = 150'

KY 8 RAMP K

P.I. STA. 26+94.66	P.I. STA. 22+42.67	P.I. STA. 19+24.88	P.I. STA. 10+78.23
Δ = 17°04'13" RT	Δ = 9°36'36" RT	Δ = 10°55'39" LT	Δ = 8°15'22" LT
C = 2°34'29"	C = 4°03'44"	C = 3°00'00"	C = 6°00'00"
T = 502.24'	T = 414.41'	T = 182.68'	T = 68.92'
L = 663.01'	L = 236.57'	L = 364.25'	L = 137.60'
R = 2225.39'	R = 1410.43'	R = 1909.86'	R = 954.93'
E = 24.92'	E = 4.97'	E = 8.72'	E = 2.48'
e = Exist	e = 4.0%	e = Exist	e = Exist

REMOVE CONCRETE MEDIAN BARRIER

Lt (Outside) I-471 Sta 287+67 to Sta 290+00 - 232 Lin Ft

CONSTRUCT CONCRET MEDIAN BARRIER TYPE 9E

Lt (Outside) I-471 Sta 287+67 to Sta 290+00 - 232 Lin Ft

REMOVE GUARDRAIL

Rt (Outside) I-471 Sta 282+99 to Sta 286+98 - 402 Lin Ft
Rt KY 8 Ramp K Sta 21+71 to Sta 23+91 - 220 Lin Ft

CONSTRUCT GUARDRAIL-STEEL W BEAM S-FACE

Rt (Outside) I-471 Sta 282+99 to Sta 286+96 - 400 Lin Ft
w/ 1 - Guardrail to Bridge End Connector Type A-1 &
1 - Guardrail End Treatment Type 2a

Rt KY 8 Ramp K Sta 21+67 to Sta 23+91 - 187.5 Lin Ft
w/ 1 - Guardrail End Treatment Type 4a &
1 - Guardrail Connector to Bridge End type A

CONSTRUCT ISLAND CURB & GUTTER

Rt KY 8 Ramp K Sta 23+73 to Sta 23+80 - 7 Lin Ft

KY 8 RAMP L

P.I. STA. 18+35.37
Δ = 10°09'49" LT
C = 1°00'00"
T = 509.52'
L = 1016.36'
R = 5729.58'
E = 22.61'
e = Exist

KY 8 RAMP L

P.I. STA. 27+42.92
Δ = 4°12'03" RT
C = 1°00'00"
T = 210.13'
L = 420.08'
R = 5729.58'
E = 3.85'
e = Exist

STA 23+95.58 - END
KY 8 RAMP K CONSTRUCTION

STA 21+25 - BEGIN
KY 8 RAMP K CONSTRUCTION

SCALE: 1"= 50'

PLAN

I-471 STA 275+00 TO STA 290+00

COUNTY OF	ITEM NO.	SHEET NO.
CAMPBELL	6-2021.00	R86

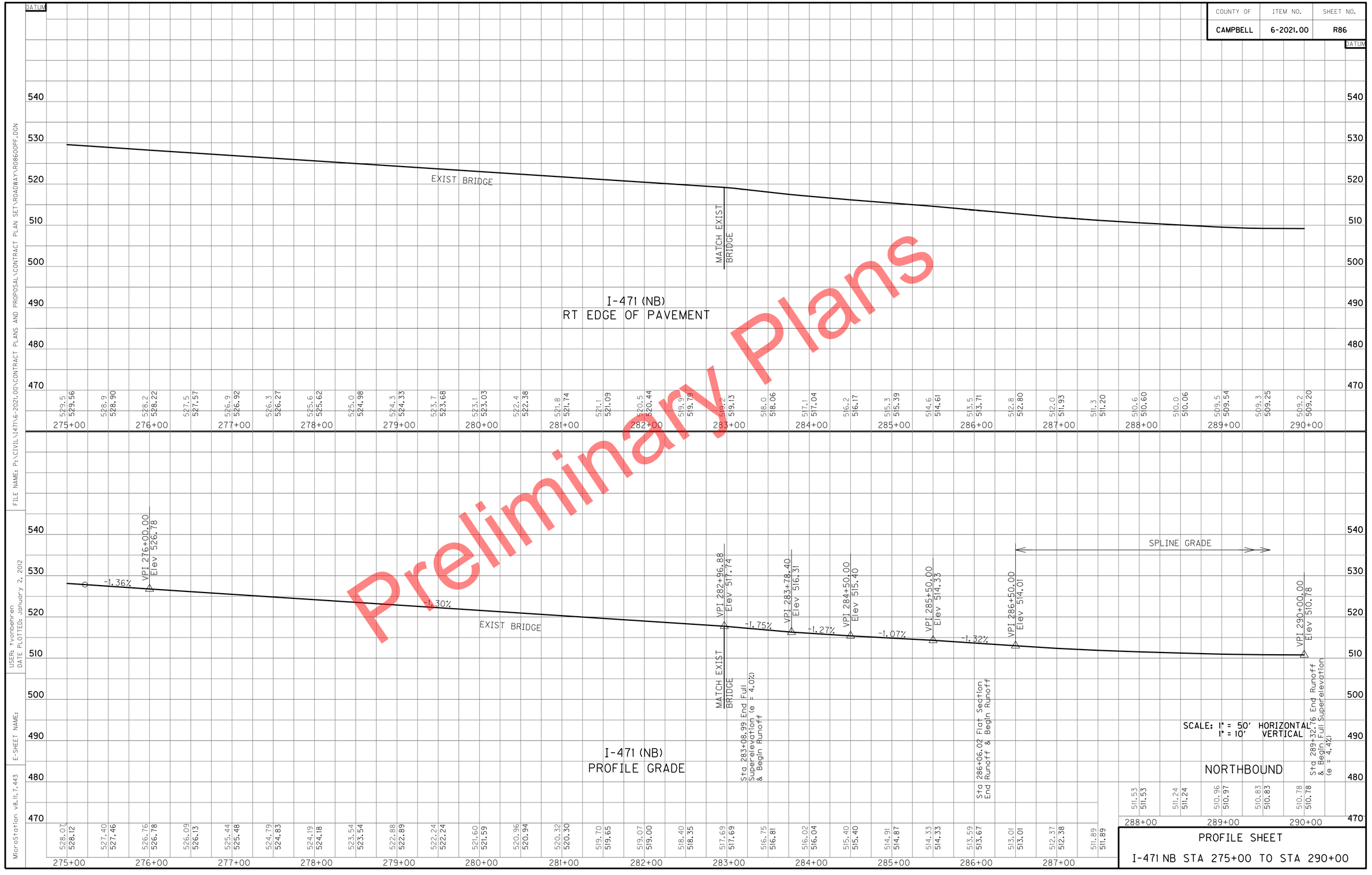

Preliminary Plans

PROFILE SHEET

I-471 NB STA 275+00 TO STA 290+00

FILE NAME: P:\CIVIL\147IN6-2021.00\CONTRACT PLANS AND PROPOSAL\CONTRACT PLAN SET\ROADWAY\R086GOPF.DGN
USER: tvonbehren
DATE PLOTTED: January 2, 2012
E-SHEET NAME:
MicroStation v8.11.7.443

COUNTY OF	ITEM NO.	SHEET NO.
CAMPBELL	6-2021.00	R87

Preliminary Plans

ALONG KY 8 RAMP K TAPER

ALONG LT EDGE OF PAVEMENT

EXIST BRIDGE

MATCH EXIST BRIDGE

I-471 (SB)
LT EDGE OF PAVEMENT

275+00	276+00	277+00	278+00	279+00	280+00	281+00	282+00	283+00	284+00	285+00	286+00	287+00	288+00	289+00	290+00
525.5	524.8	524.1	523.3	522.7	522.1	521.3	520.6	519.9	519.3	518.7	518.0	517.3	516.7	516.0	515.3	516.6	515.0	514.5	514.2	514.0	514.0	513.7	513.4	513.1	513.0	513.1	513.2	513.3	513.3	513.3
525.51	524.80	524.08	523.37	522.71	522.05	521.38	520.72	520.06	519.39	518.73	518.07	517.40	516.74	516.07	515.41	515.55	514.87	514.50	514.25	514.09	513.92	513.68	513.45	513.25	513.07	513.08	513.11	513.20	513.29	513.14

-1.29%

EXIST BRIDGE

VPI 282+96.77
Elev 517.33

VPI 283+73.49
Elev 516.07

VPI 284+50.00
Elev 515.22

VPI 285+50.00
Elev 514.27

VPI 286+50.00
Elev 513.17

VPI 290+50.00
Elev 511.12

SPLINE GRADE

-1.65%

-1.11%

-0.95%

-1.09%

MATCH EXIST BRIDGE

Sta 283+26.07 End Transition
From Bridge (e=3.7%
& Begin Runoff

Sta 286+06.02 Flat Section
End Runoff & Begin Runoff

Sta 289+32.76 End Runoff
& Begin Full Superelevation
(e = 4.4%)

I-471 (SB)
PROFILE GRADE

SCALE: 1" = 50' HORIZONTAL
1" = 10' VERTICAL

275+00	276+00	277+00	278+00	279+00	280+00	281+00	282+00	283+00	284+00	285+00	286+00	287+00	288+00	289+00	290+00
527.6	526.9	526.3	525.6	525.0	524.4	523.7	523.0	522.4	521.8	521.1	520.5	519.8	519.2	518.6	517.9	517.3	516.4	515.7	515.2	514.8	514.3	513.7	513.2	512.7	512.2	511.9	511.6	511.4	511.3	511.2
527.59	526.95	526.31	525.67	525.02	524.38	523.73	523.09	522.44	521.80	521.16	520.51	519.87	519.22	518.58	517.94	517.28	516.45	515.77	515.22	514.74	514.27	513.72	513.17	512.66	512.18	511.88	511.59	511.38	511.26	511.12

PROFILES

SB I-471 STA 275+00 TO STA 290+00

FILE NAME: P:\CIVIL\147IN6-2021.00\CONTRACT PLANS AND PROPOSAL\CONTRACT PLAN SET\ROADWAY\R0870OPF.DGN
USER: tvonbehren
DATE PLOTTED: January 2, 2012
E-SHEET NAME:
MicroStation v8.11.7.443

COUNTY OF	ITEM NO.	SHEET NO.
CAMPBELL	6-2021.00	R88

DATUM

530
520
510
500
490
480
470
460

EXIST BRIDGE

MATCH EXIST BRIDGE

LT EDGE OF PAVEMENT

20+00	21+00	22+00	23+00	24+00	25+00
511.9	512.4	513.2 / 513.12	513.6 / 513.60	513.9 / 513.95	514.3 / 514.25	514.8 / 514.75	515.4

550
540
530
520
510
500
490
480
470

SPLINE GRADE

VPI 21+25.00
Elev 512.70

0.47%

1.25%

VPI 23+93.58
Elev 514.85

EXIST BRIDGE

MATCH EXIST BRIDGE

STA 21+25 - BEGIN
KY 8 RAMP K

STA 23+95.58 - END
KY 8 RAMP K

RT EDGE OF PAVEMENT
PROFILE GRADE

20+00	21+00	22+00	23+00	24+00	25+00
512.1	512.3	512.6	512.8 / 512.81	513.1 / 513.07	513.4 / 513.45	513.7 / 513.78	514.4 / 514.30	514.9	515.5	516.2

Preliminary Plans

SCALE: 1" = 50' HORIZONTAL
1" = 10' VERTICAL

KY 8 RAMP K

PROFILE
STA 20+00 TO STA 25+00 (KY 8 RAMP K)

FILE NAME: P:\CIVIL\147\16-2021.00\CONTRACT PLANS AND PROPOSAL\CONTRACT PLAN SET\ROADWAY\R088OPF.DGN
USER: tvonbehren
DATE PLOTTED: January 2, 2012
E-SHEET NAME:
MicroStation v8.11.7.443

COUNTY OF	ITEM NO.	SHEET NO.
CAMPBELL	6-2021.00	R89

STA 12+93.09 - END
KY 8 RAMP B CONSTRUCTION

Reconstruct 4" Concrete Sidewalk (11 SY)

Conc Curb

Traffic Islands

PT 12+93.09

PC 11+72.87

PT 11+04.99

Conc Barrier Wall

6" Perf Pipe

Conc Barrier Wall

Conc Box Beam Wall

Asphalt Overlay

Concrete Overlay

10+00

295+00

PT 11+96.91

PC 6+48.56

PC 10+09.31

10+00

5+00

S 70°08'20" E

POT 7+91.88

STA 4+81.72 - BEGIN
KY 8 RAMP B CONSTRUCTION

300+00

305+00

OHIO RIVER

Traffic Control Cabinet

Traffic Jct. Box

P.I. 4+81.72

POT 4+36.93

296+58.1

Crash Cushion

KY 8 RAMP B

S 53°18'57" E

019B00082L

019B00039L

2.25' Shld

Begin Bridge

300' Taper

Conc Barrier Wall

End Solid Fence Barrier Wall

6" Perf Pipe

100:1 Taper

50:1 Taper

6" Perf Pipe

Flume

296+76.75

3' Shld

℄ I-471

℄ KY 8

019B00082R

019B00039R

PT 297+61.80

15+00

303

302

301

300

299

298

297

296

294

KY 8 RAMP K

S 78°23'42" E

KY 8 RAMP A

6" Perf Pipe

LP Base Only

Traffic Control Box

PT 14+89.53

PC 13+53.29

PC 289+32.76

STA 14+89.53 - END
KY 8 RAMP A CONSTRUCTION

REMOVE CONCRETE MEDIAN BARRIER

Lt (Outside) I-471 Sta 290+00 to Sta 296+40 - 640 Lin Ft
Lt KY 8 Ramp B Sta 5+64 to Sta 7+15 - 151 Lin Ft

CONSTRUCT CONCRET MEDIAN BARRIER TYPE 9E

Lt (Outside) I-471 Sta 290+00 to Sta 295+79.1 - 579 Lin Ft
Lt KY 8 Ramp B Sta 6+15.9 to Sta 7+15 - 99 Lin Ft

CONSTRUCT CRASH CUSHION TYPE VI CLASS C TL3

Lt (Outside) I-471 Sta 295+82.5 - 1 Each

REMOVE FENCE

Rt KY 8 Ramp B Sta 4+95 to Sta 6+61 - 166 Lin Ft

CONSTRUCT FENCE-6 FT CHAIN LINK

Rt KY 8 Ramp B Sta 4+95 to Sta 6+61 - 166 Lin Ft

KY 8 RAMP B

P.I. STA. 9+52.98	P.I. STA. 12+50.32
Δ = 96°51'24" RT	Δ = 91°50'27" RT
C = 21°13'14"	C = 76°23'40"
T = 304.41'	T = 77.45'
L = 456.43'	L = 120.22'
R = 270.00'	R = 75.00'
E = 136.90'	E = 32.81'
e = 6.0%	e = Var

I-471

P.I. STA. 293+53.92	
Δ = 24°52'16" RT	
C = 3°00'00"	
T = 421.15'	
L = 829.04'	
R = 1909.86'	
E = 45.88'	
e = 4.4%	

CONSTRUCT ISLAND CURB & GUTTER

Rt (Outside) I-471 Sta 296+66 to Sta 296+77 - 11 Lin Ft
Rt KY 8 Ramp B Sta 4+95 to Sta 5+13 - 18 Lin Ft
Rt KY 8 Ramp B Sta 5+15 to Sta 5+26 - 11 Lin Ft

REMOVE GUARDRAIL

Rt (Outside) I-471 Sta 292+95 to Sta 296+82 - 374 Lin Ft
Rt KY 8 Ramp B Sta 4+85 to Sta 6+74 - 189 Lin Ft
Rt KY 8 Ramp B Sta 7+38 to Sta 8+95 - 150 Lin Ft

CONSTRUCT GUARDRAIL-STEEL W BEAM S-FACE

Rt (Outside) I-471 Sta 292+86 to Sta 296+88 - 350 Lin Ft
w/ 1 - Guardrail End Treatment Type 4A &
1 - Guardrail Connector to Bridge End Type A

Rt KY 8 Ramp B Sta 4+86 to Sta 6+75 - 187.5 Lin Ft
w/ 1 - Guardrail Connector to Bridge End Type A-1
& 1 - Guardrail Connector to Bridge End Type A

Rt KY 8 Ramp B Sta 7+38 to Sta 8+95 - 150 Lin Ft
w/ 1 - Guardrail Connector to Bridge End Type A-1
& 1 - Guardrail End Treatment Type 2A

CONSTRUCT ISLAND HEADER CURB TYPE 2

Rt (Outside) I-471 Sta 294+06 to Sta 296+55 - 249 Lin Ft

CONSTRUCT FLUME INLET TYPE 2

Rt (Outside) I-471 Sta 293+88 - Each

Preliminary Plans

SCALE: 1"= 50'

PLAN

I-471 STA 290+00 TO STA 305+00

FILE NAME: P:\CIVIL\I471\6-2021.00\CONTRACT PLANS AND PROPOSAL\CONTRACT PLAN SET\ROADWAY\R089GOPL.DGN
USER: tvonbehren
DATE PLOTTED: January 2, 2012
E-SHEET NAME:
MicroStation v8.11.7.443

COUNTY OF	ITEM NO.	SHEET NO.
CAMPBELL	6-2021.00	R90



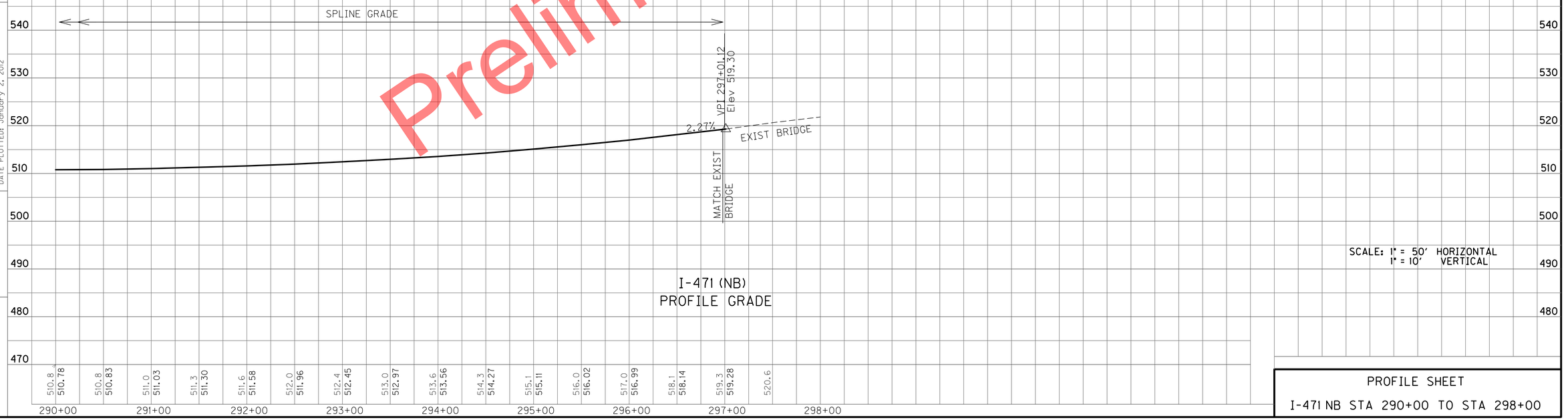

SCALE: 1" = 50' HORIZONTAL
1" = 10' VERTICAL

PROFILE SHEET

I-471 NB STA 290+00 TO STA 298+00

Preliminary Plans

FILE NAME: P:\CIVIL\147N6-2021.00\CONTRACT PLANS AND PROPOSAL\CONTRACT PLAN SET\ROADWAY\R9000PF.DGN
USER: tvonbehren
DATE PLOTTED: January 2, 2012
E-SHEET NAME:
MicroStation v8.11.7.443

COUNTY OF	ITEM NO.	SHEET NO.
CAMPBELL	6-2021.00	R91

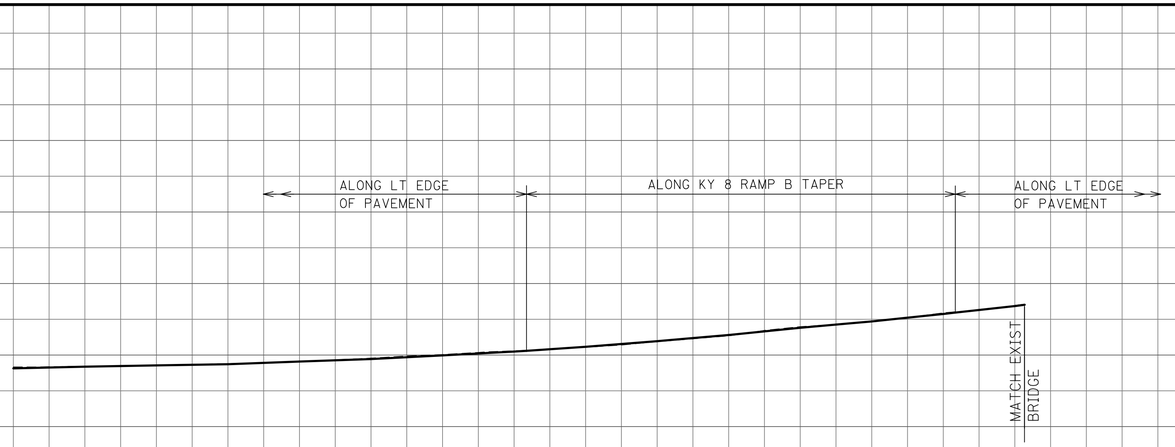

I-471 (SB)
LT EDGE OF PAVEMENT

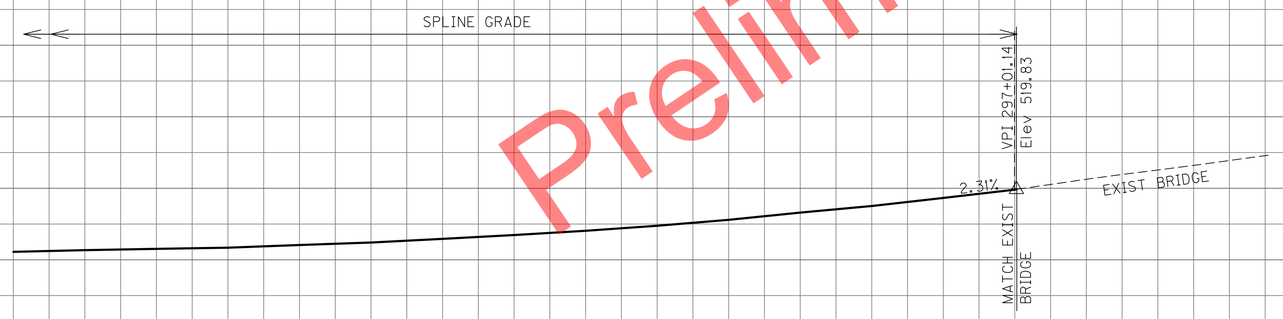

I-471 (SB)
PROFILE GRADE

SCALE: 1" = 50' HORIZONTAL
1" = 10' VERTICAL

PROFILES
SB I-471 STA 290+00 TO STA 298+00

Preliminary Plans

FILE NAME: P:\CIVIL\147IN6-2021.00\CONTRACT PLANS AND PROPOSAL\CONTRACT PLAN SET\ROADWAY\R09100PF.DGN
USER: tvonbehren
DATE PLOTTED: January 2, 2012
E-SHEET NAME:
MicroStation v8.11.7.443

COUNTY OF	ITEM NO.	SHEET NO.
CAMPBELL	6-2021.00	R92

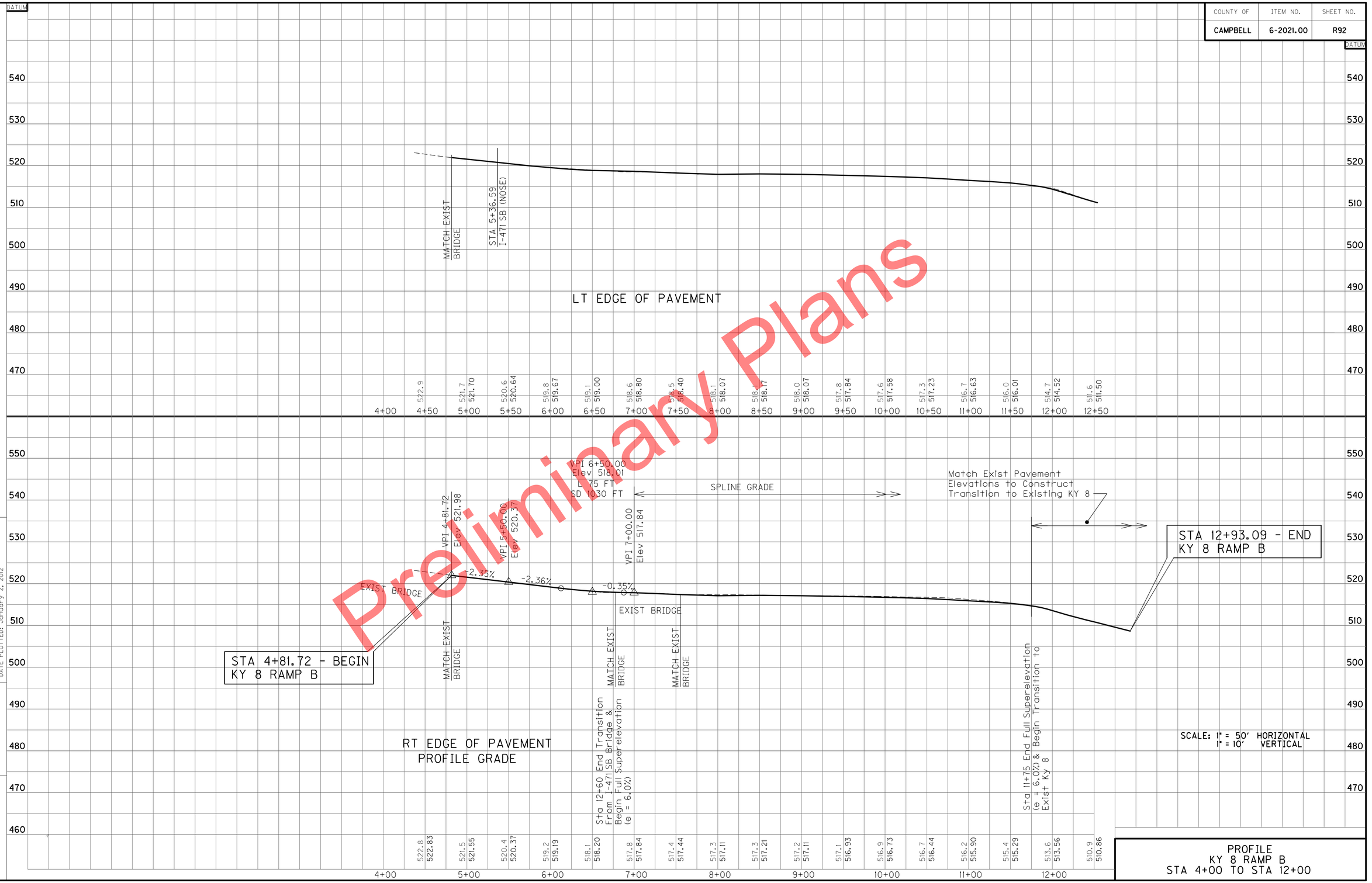

Preliminary Plans

PROFILE
KY 8 RAMP B
STA 4+00 TO STA 12+00

FILE NAME: P:\CIVIL\471\6-2021.00\CONTRACT PLANS AND PROPOSAL\CONTRACT PLAN SET\ROADWAY\R9200PF.DGN
USER: tvonbehren
DATE PLOTTED: January 2, 2012
E-SHEET NAME:
MicroStation v8.11.7.443

COUNTY OF	ITEM NO.	SHEET NO.
CAMPBELL	6-2021.00	R93

305+00

310+00

315+00

320+00

OHIO RIVER

019B00039L

STA 314+45.00
END CONSTRUCTION

N 57°24'30.22" W

℄ I-471

019B00039R

CAMPBELL CO, KENTUCKY
HAMILTON CO, OHIO
(APPROXIMATE)

Preliminary Plans

SCALE: 1"= 50'

PLAN

I-471 STA 305+00 TO STA 320+00

MicroStation v8.11.7.443 | E-SHEET NAME: | USER: tvonbehren DATE PLOTTED: January 2, 2012 | FILE NAME: P:\CIVIL\471\6-2021.00\CONTRACT PLANS AND PROPOSAL\CONTRACT PLAN SET\ROADWAY\R0930PL.DGN

COUNTY OF	ITEM NO.	SHEET NO.
CAMPBELL	6-2021.00	R94

I-471 NB

P.I. STA. 85+25.53
Δ = 24°51'57" RT
C = 3°01'54"
Ts = 608.97'
Ls = 400.00'
Lc = 620.18'
θ = 6°03'49"
L.T. = 266.82'
S.T. = 133.48'
R = 1889.86'
Es = 47.21'
e = 5.3%

RAMP F

P.I. STA. 1+74.65
Δ = 2°10'09" LT
C = 1°08'45"
T = 94.66'
L = 189.30'
R = 5000.00'
E = 0.90'
e = 2.0%

RAMP A

P.I. STA. 16+05.34
Δ = 81°54'56" RT
C = 5°02'37"
Ts = 1138.82'
Ls = 300.00'
Lc = 1324.13'
θ = 7°33'56"
L,T, = 200.18'
S.T. = 100.17'
R = 1136.00'
ES = 224.61'
e = 7.1%

I-471 NB

S.P.I. STA. 84+47.17
θ = 5°54'04" RT
Ls = 400.00'
L.T. =266.81'
S.T. = 133.47'
e = 5.3%

LOW WIRE CLEARANCE TABLE

LOCATION			
A	B	C	D
29.2'	24.0'	23.6'	21.9'

DITCH CONSTRUCTION NOTES

Station	Loc.	Size-Shape	Lining Type	Quantity	D	T
7+50 - 8+00	Rt	Spl 2' FB	Cl III	50 Ton	1.0'	2.0'
8+00 - 10+00	Rt	Spl 2' FB	-	-	-	-
8+40 - 9+00	Lt	Spl 2' FB	Cl III	70 Ton	1.0'	2.0'
9+00 - 10+00	Lt	2' FB Rdwy	-	-	-	-

Preliminary Plans

SCALE: 1"= 50'

PLAN SHEET
RAMP A
STA 0+00 TO STA 10+00

FILE NAME: P:\CIVIL\471\6-2021.00\CONTRACT PLANS AND PROPOSAL\CONTRACT PLAN SET\ROADWAY\R0940OPL.DGN
USER: tvonbehren
DATE PLOTTED: January 2, 2012
E-SHEET NAME:
MicroStation v8.11.7.443

COUNTY OF	ITEM NO.	SHEET NO.
CAMPBELL	6-2021.00	R95

Preliminary Plans

LT EDGE OF PAVEMENT

Sta 4+85.29 -
I-471 SB Nose

PROFILE GRADE

STA 0+00.00 ~ BEGIN
RAMP A CONSTRUCTION

VPI 0+00.00
Elev 668.57

1.73%

Sta 3+75.00 End Full
Superelevation (e = 4.0%)
& Begin Runoff

Spline Grade

32.8' Lt Sta 6+33.5 Const Drop
Box Inlet Type 5A (No Apron)
w/ 70' - 18" Pipe &
1 - 18" S&F Headwall

TG 681.80
Inv 676.80
Inv 675.00

Sta 7+00.00 End Runoff &
Begin Full Superelevation
(e = 4.0%)

VPI 8+00.00
Elev 686.86

4.48%
6.0%
4.59%
10.6%
5.0%
13.0%
5.4%
4.4%
4.65%

VPI 9+00.00
Elev 691.45

Spl 2' FB R+
Spl 2' FB Lt

SCALE: 1" = 50' HORIZONTAL
1" = 10' VERTICAL

RAMP A
PROFILE SHEET
STA 0+00 TO STA 10+00

DATUM: 710, 700, 690, 680, 670, 660, 650, 640, 630, 720

0+00 1+00 2+00 3+00 4+00 5+00 6+00 7+00 8+00 9+00 10+00

668.6 668.57 | 669.6 669.44 | 670.5 670.30 | 671.4 671.17 | 672.2 672.14 | 673.0 673.13 | 674.0 674.12 | 674.9 675.12 | 676.0 676.04 | 676.9 676.96 | 678.1 677.88 | 679.3 678.76 | 680.6 679.50 | 682.2 680.63 | 683.8 682.40 | 685.6 684.62

673.1 673.10 | 674.1 674.09 | 675.1 675.08 | 676.2 676.08 | 677.2 677.06 | 678.1 678.10 | 679.3 679.14 | 679.8 680.13 | 681.5 680.98 | 683.3 682.22 | 685.1 684.10 | 686.6 686.33 | 688.5 688.57 | 690.6 690.86 | 692.7 693.16 | 695.0 695.48 | 697.2 697.81

687.4 686.86 | 689.4 689.16 | 691.5 691.45 | 693.6 693.78 | 695.9 696.10

680.5 | 683.5 | +40 683.9 685.2 | 688.5 | 690.5 | 691.2 | 693.4

8+00 9+00 10+00

FILE NAME: P:\CIVIL\147N\6-2021.00\CONTRACT PLANS AND PROPOSAL\CONTRACT PLAN SET\ROADWAY\R0950PF.DGN
USER: tvonbehren
DATE PLOTTED: January 2, 2012
E-SHEET NAME:
MicroStation v8.11.7.443

COUNTY OF	ITEM NO.	SHEET NO.
CAMPBELL	6-2021.00	R96

I-275 WB
P.I. 1230+97.02
Δ = 46°03'52" Rt.
C = 2°00'00"
Ts = 1418.89'
Ls = 400.00'
Lc = 1903.22'
θ = 4°00'00"
L.T.= 266.73'
S.T.= 133.40'
R = 2864.79'
Es = 250.68'
e = 6.0%
Runoff = 400'
Runout = 133.33'

RAMP A
P.I. STA. 16+05.34
Δ = 81°54'56" RT
C = 5°02'37"
Ts = 1138.82'
Ls = 300.00'
Lc = 1324.13'
θ = 7°33'56"
L.T. = 200.18'
S.T. = 100.17'
R = 1136.00'
ES = 224.61'
e = 7.1%

LOW WIRE CLEARANCE TABLE

LOCATION			
A	B	C	D
107.5'	107.3'	108.8'	110.8'

Concrete Footer (Typ)

Power Transmission Tower

STA 23+90.66 ~ END
RAMP A CONSTRUCTION

DITCH CONSTRUCTION NOTES

Station	Loc.	Size-Shape	Lining Type	Quantity	D	T
10+00 - 22+00	Rt	Spl 2' FB	-	-	-	-
22+00 - 23+91	Rt	2' FB Rdwy	-	-	-	-
10+00 - 18+75	Lt	2' FB Rdwy	-	-	-	-
18+75 - 19+50	Lt	V	EC Blkt	70 SY	1.0'	-
19+50 - 20+50	Lt	Spl V	EC Blkt	90 SY	1.0'	-

SCALE: 1"= 50'

PLAN SHEET
RAMP A
STA 10+00 TO STA 23+98.48

Preliminary Plans

FILE NAME: P:\CIVIL\147\N6-2021.00\CONTRACT PLANS AND PROPOSAL\CONTRACT PLAN SET\ROADWAY\R096GOPL.DGN
USER: tvonbehren
DATE PLOTTED: January 2, 2012
E-SHEET NAME:
MicroStation v8.11.7.443

COUNTY OF	ITEM NO.	SHEET NO.
CAMPBELL	6-2021.00	R97

Preliminary Plans

LT EDGE OF PAVEMENT

PROFILE GRADE

Sta 21+81.68
I-275 Nose

VPI 18+00.00
Elev 733.30

Spl V Lt

Spl 2' FB Rt

PVC 13+50.00
Elev 712.38

L 900 FT
SD 593 FT

Sta 20+34.50 End Full
Superelevation (e = 7.1%)
& Begin Runoff

PVT 22+50.00
Elev729.33

Spline Grade

VPI 23+90.66
Elev 727.57

STA 23+90.66 ~ END
RAMP A CONSTRUCTION

SCALE: 1" = 50' HORIZONTAL
1" = 10' VERTICAL

RAMP A
PROFILE SHEET
STA 10+00 TO STA 25+00

FILE NAME: P:\CIVIL\147IN6-2021.00\CONTRACT PLANS AND PROPOSAL\CONTRACT PLAN SET\ROADWAY\R97GOPF.DGN
USER: tvonbehren
DATE PLOTTED: January 2, 2012
E-SHEET NAME:
MicroStation v8.11.7.443

COUNTY OF	ITEM NO.	SHEET NO.
CAMPBELL	6-2021.00	R98

DITCH CONSTRUCTION NOTES

Station	Loc.	Size-Shape	Lining Type	Quantity	D	T
1197+60 - 1199+75	Lt	Spl V	EC Blnkt	240 SY	1.0'	-

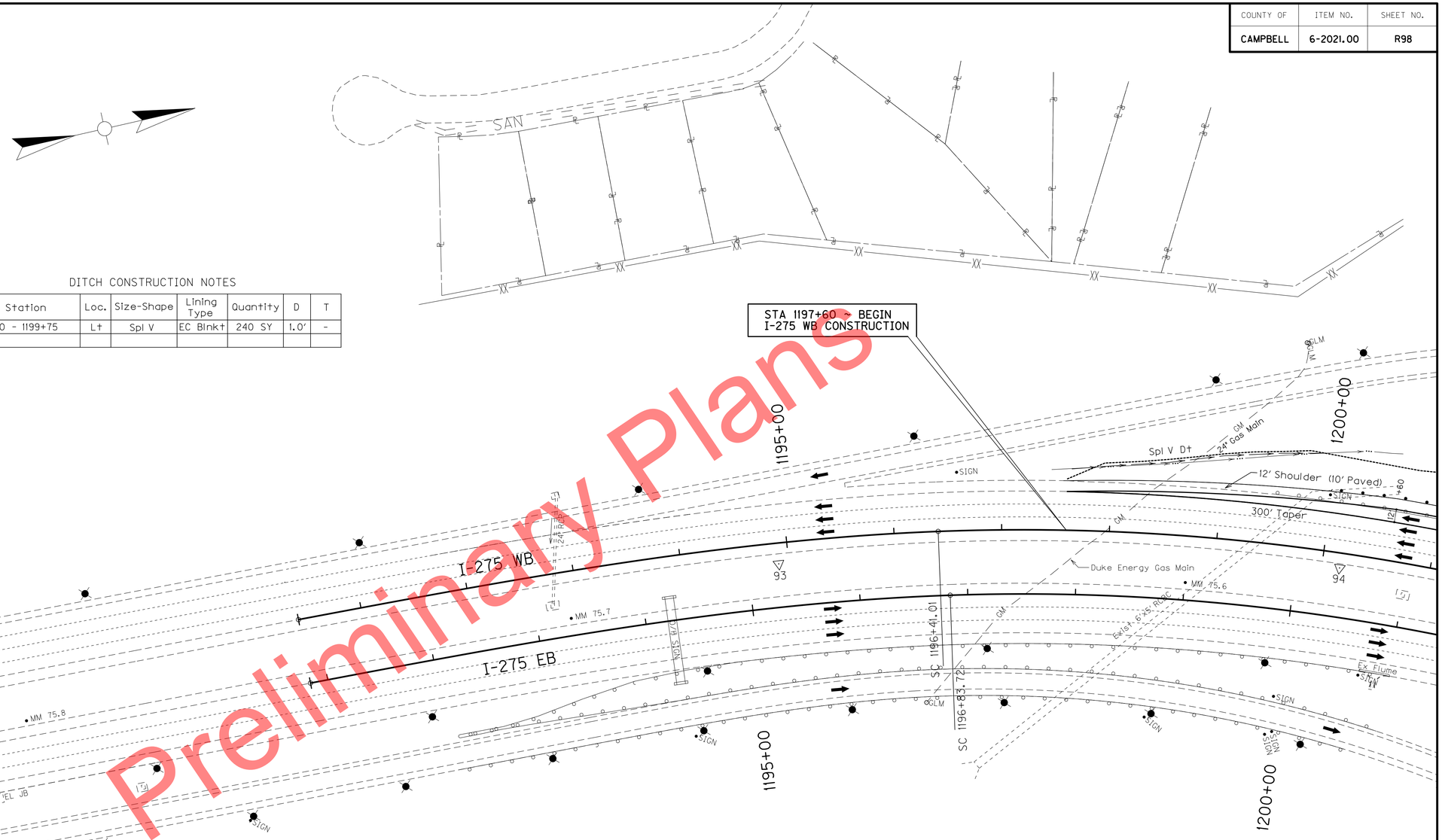

Preliminary Plans

I-275 WB

P.I. 1201+06.16
Δ = 41°08'58" Rt.
C = 2°49'13"
Ts = 1065.15'
Ls = 600.00'
Lc = 859.06'
θ = 8°27'39"
L.T.= 400.46'
S.T.= 200.42'
R = 2031.58'
Es = 146.29'
e = 6.7%
Runoff = 600'
Runout = 179.10'

SCALE: 1"= 50'

PLAN SHEET
I-275 WB
STA 1190+41.01 TO STA 1200+00

FILE NAME: P:\CIVIL\147IN6-2021.00\CONTRACT PLANS AND PROPOSAL\CONTRACT PLAN SET\ROADWAY\R9860PL.DGN
USER: tvonbehren
DATE PLOTTED: January 2, 2012
E-SHEET NAME:
MicroStation v8.11.7.443

COUNTY OF	ITEM NO.	SHEET NO.
CAMPBELL	6-2021.00	R99

DATUM

800 790 780 770 760 750 740 730 720 710 700 690 680 670 660 650 640 630 620

STA 1197+60 ~ BEGIN
I-275 WB CONSTRUCTION

L 620 FT
SD 779 FT

PVC 1196+61.20
Elev 709.25

+60 707.7

3.5%

706.3

3.6%

704.5

4.0%

Spl V Lt

702.5

4.4%

700.3

2.8%

VPI 1199+71.20
Elev 701.93

698.9

SCALE: 1" = 50' HORIZONTAL
1" = 10' VERTICAL

724.8 723.5 722.3 721.0 719.7 718.4 717.1 715.9 714.6 713.3 712.0 710.7 709.5 708.4 708.37 707.4 707.36

706.5 706.49 705.8 705.75 705.1 705.15 704.7 704.68 704.3 704.34

1185+00 1186+00 1187+00 1188+00 1189+00 1190+00 1191+00 1192+00 1193+00 1194+00 1195+00 1196+00 1197+00 1198+00 1199+00 1200+00

I-275 WB
PROFILE SHEET
STA 1185+00 TO STA 1200+00

Preliminary Plans

FILE NAME: P:\CIVIL\147\V6-2021.00\CONTRACT PLANS AND PROPOSAL\CONTRACT PLAN SET\ROADWAY\R9960PF.DGN
USER: tvonbehren
DATE PLOTTED: January 2, 2012
E-SHEET NAME:
MicroStation v8.11.7.443

COUNTY OF	ITEM NO.	SHEET NO.
CAMPBELL	6-2021.00	R100

DITCH CONSTRUCTION NOTES

Station	Loc.	Size-Shape	Lining Type	Quantity	D	T
1205+70 - 1206+75	Lt	Spl V	EC Blnkt	120 SY	1.0′	-
1208+50 - 1209+00	Lt	Spl V	EC Blnkt	60 SY	1.0′	-
1210+35 - 1212+50	Lt	2′ FB Surf	Cl III*	225 Ton	1.0′	2.0′
1212+50 - 1213+00	Lt	Spl 2′ FB	EC Blnkt	65 SY	1.0′	-
1213+00 1215+00	Lt	6′ FB Rdwy	-	-	-	-

*CLASS III - MOD

CONSTRUCT EMBANKMENT FOUNDATION BENCH

Lt Sta 1200+00 to Lt Sta 1209+15
Lt Sta 1210+25 to Lt Sta 1212+25

REMOVE GUARDRAIL

Lt Sta 1200+00 to Lt Sta 1208+81 - 898 Lin Ft
Lt Sta 1210+45.4 to Lt Sta 1213+71.6 - 327 Lin Ft

CONSTRUCT GUARDRAIL-STEEL W BEAM S-FACE

Lt Sta 1200+00 to Lt Sta 1208+81.2 - 912.5 Lin Ft
w/ 1 - Guardrail End Treatment Type 2A &
1 - Guardrail Connector to Bridge End Type A-1

Lt Sta 1210+50 to Lt Sta 1214+50 - 362.5 Lin Ft
w/ 1 - Guardrail Connector to Bridge End Type A-1
& 1 - Guardrail End Treatment Type 4A

CONSTRUCT STANDARD CURB & GUTTER

Rt Three Mile Rd Sta 49+25.6 to Lt Sta 49+52.9 - 29 Lin Ft

CONSTRUCT ISLAND INTEGRAL CURB

Lt Sta 1210+46.9 to Lt Sta 1210+71.9 - 25 Lin Ft

CONSTRUCT RETAINING WALL GRAVITY TYPE NON-REINFORCED

(See Sheet R135 For Wall Profiles and Details)

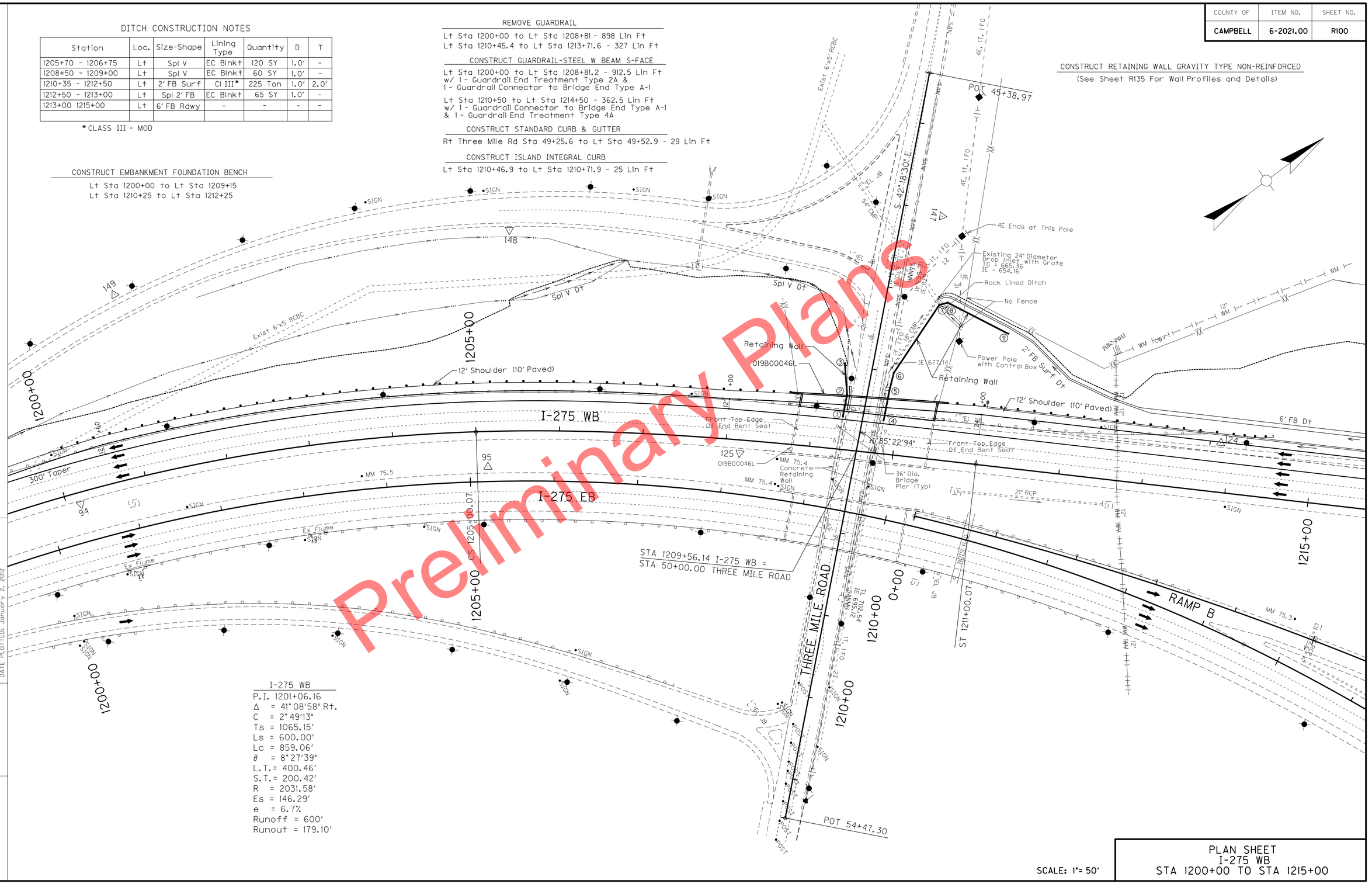

Preliminary Plans

I-275 WB

P.I. 1201+06.16
Δ = 41°08'58" Rt.
C = 2°49'13"
Ts = 1065.15′
Ls = 600.00′
Lc = 859.06′
θ = 8°27'39"
L.T.= 400.46′
S.T.= 200.42′
R = 2031.58′
Es = 146.29′
e = 6.7%
Runoff = 600′
Runout = 179.10′

SCALE: 1"= 50′

PLAN SHEET
I-275 WB
STA 1200+00 TO STA 1215+00

FILE NAME: P:\CIVIL\147\N6-2021.00\CONTRACT PLANS AND PROPOSAL\CONTRACT PLAN SET\ROADWAY\R10000PL.DGN
USER: tvonbehren
DATE PLOTTED: January 2, 2012
E-SHEET NAME:
MicroStation v8.11.7.443

COUNTY OF	ITEM NO.	SHEET NO.
CAMPBELL	6-2021.00	R101



Preliminary Plans

I-275 WB
PROFILE SHEET
STA 1200+00 TO STA 1215+00

FILE NAME: P:\CIVIL\1471\6-2021.00\CONTRACT PLANS AND PROPOSAL\CONTRACT PLAN SET\ROADWAY\R101OOPF.DGN
USER: tvonbehren
DATE PLOTTED: January 2, 2012
E-SHEET NAME:
MicroStation v8.11.7.443

COUNTY OF	ITEM NO.	SHEET NO.
CAMPBELL	6-2021.00	R102

DITCH CONSTRUCTION NOTES

Station	Loc.	Size-Shape	Lining Type	Quantity	D	T
1215+00 - 1216+85	Lt	6' FB Rdwy	-	-	-	-

RAMP A

P.I. STA. 16+05.34
Δ = 81°54'56" RT
C = 5°02'37"
Ts = 1138.82'
Ls = 300.00'
Lc = 1324.13'
θ = 7°33'56"
L.T. = 200.18'
S.T. = 100.17'
R = 1136.00'
ES = 224.61'
e = 7.1%

Power Transmission Tower
Concrete Footer (Typ)

STA 23+90.66 ~ END
RAMP A CONSTRUCTION

ST 23+90.66
CS 20+90.66
21+81.68
20+00
15+00
RAMP A
8' Perf Pipe
Spl 2' FB Dt
2' FB Dt
2' FB Spl Dt
Spl V Dt
6' FB Dt
6" Perf Pipe
S 43°17'35" W
24"
10'
18'
6'
SIGN
136
150
123
122
285

LOW WIRE CLEARANCE TABLE

LOCATION			
A	B	C	D
107.5'	107.3'	108.8'	110.8'

1215+00
1216+78.13
TS 1216+78.13
1219+94.75
1220+00
1220+78.13
SC 1220+78.13
STA 1219+98.10 ~ END
I-275 WB CONSTRUCTION
I-275 WB
I-275 EB
MM 75.3
MM 75.2
18" RCP
1225+00
1230+00
10+00
15+00

I-275 WB

P.I. 1230+97.02
Δ = 46°03'52" Rt.
C = 2°00'00"
Ts = 1418.89'
Ls = 400.00'
Lc = 1903.22'
θ = 4°00'00"
L.T. = 266.73'
S.T. = 133.40'
R = 2864.79'
Es = 250.68'
e = 6.0%
Runoff = 400'
Runout = 133.33'

TS 10+15.45
SC 13+09.42
PT 16+76.78
PC 17+01.36
PCC 17+65.85

Preliminary Plans

SCALE: 1"= 50'

PLAN SHEET
I-275 WB
STA 1215+00 TO STA 1225+00

FILE NAME: P:\CIVIL\147\N6-2021.00\CONTRACT PLANS AND PROPOSAL\CONTRACT PLAN SET\ROADWAY\R102OPL.DGN
USER: tvonbehren
DATE PLOTTED: January 2, 2012
E-SHEET NAME:
MicroStation v8.11.7.443

COUNTY OF	ITEM NO.	SHEET NO.
CAMPBELL	6-2021.00	R103

DATUM

800 790 780 770 760 750 740 730 720 710 700 690 680 670 660 650 640 630 620

Sta 1215+44.79 End Normal Section & Begin Runout

Sta 1216+78.13 Flat Section End Runout & Begin Runoff

Sta 1218+11.46 Reverse Crown

Sta 1220+78.13 End Runout & Begin Full Superelevation (e = 6.0%)

STA 1219+98.10 ~ END
I-275 WB CONSTRUCTION

VPI 1215+60.59
Elev 727.80

0.52%

PVT 1219+60.59
Elev 729.89

L 800 FT
SD 1180 FT

725.6	726.3	726.9	727.4	727.9	728.4	728.8	729.2	729.5	729.8	730.1	730.4	730.6	730.9	731.2	731.4	731.7	732.0	732.3	732.5	732.8	
725.65	726.29	726.88	727.43	727.94	728.40	728.83	729.20	729.54	729.83	730.09	730.35	730.61	730.89	731.16	731.44	731.71	731.99	732.27	732.54	732.82	

1215+00 1216+00 1217+00 1218+00 1219+00 1220+00 1221+00 1222+00 1223+00 1224+00 1225+00

SCALE: 1" = 50' HORIZONTAL
1" = 10' VERTICAL

I-275 WB
PROFILE SHEET
STA 1215+00 TO STA 1225+00

Preliminary Plans

FILE NAME: P:\CIVIL\147\6-2021.00\CONTRACT PLANS AND PROPOSAL\CONTRACT PLAN SET\ROADWAY\R103OPF.DGN
USER: tvonbehren
DATE PLOTTED: January 2, 2012
E-SHEET NAME:
MicroStation v8.11.7.443

COUNTY OF	ITEM NO.	SHEET NO.
CAMPBELL	6-2021.00	R104

Preliminary Plans

US 27 RAMP D

P.I. STA. 22+46.35
Δ = 25°59'05" RT
C = 8°00'00"
T = 165.25'
L = 324.81'
R = 716.20'
E = 18.82'
e = 6.2%

LOW WIRE CLEARANCE TABLE

LOCATION					
G	H	I	J	K	L
102.4'	96.7'	94.3'	90.6'	89.8'	90.9'

US 27 RAMP C

P.I. STA. 13+76.64
Δ = 27°17'44" RT
C = 6°00'00"
T = 231.86'
L = 454.93'
R = 954.93'
E = 27.75'
e = 5.2%

I-471

P.I. STA. 119+86.52
Δ = 31°30'12" RT
C = 1°58'57"
Ts = 990.63'
Ls = 350.00'
Lc = 1239.03'
θ = 3°28'10"
L.T. = 233.38'
S.T. = 116.71'
R = 2890.00'
Es = 114.60'
e = 3.8%
Runout = 184.21'

STA 9+91.42 - Begin US 27 Ramp C Construction

STA 20+21.24 - End US 27 Ramp C Construction

REMOVE GUARDRAIL

US 27 Ramp C Rt Sta 16+80 to Sta 20+39 - 375 Lin Ft

CONSTRUCT GUARDRAIL-STEEL W BEAM S-FACE

US 27 Ramp C Rt Sta 16+80 to Sta 20+39 - 375 Lin Ft
w/ 1- Guardrail End Treatment Type 3 &
1- Connect To Existing Guardrail

LOW WIRE CLEARANCE TABLE

LOCATION				
A	B	C	D	E
24.9'	24.3'	26.5'	25.4'	27.4'

SCALE: 1"= 50'

PLAN

US 27 RAMP C

FILE NAME: P:\CIVIL\147\N6-2021.00\CONTRACT PLANS AND PROPOSAL\CONTRACT PLAN SET\ROADWAY\R104OPL.DGN
USER: tvanbehren
DATE PLOTTED: January 2, 2012
E-SHEET NAME:
MicroStation v8.11.7.443

COUNTY OF	ITEM NO.	SHEET NO.
CAMPBELL	6-2021.00	R105

Preliminary Plans

STA 9+91.42
I-471 NB NOSE

US 27 RAMP C
LT EDGE OF PAVEMENT

10+00	11+00	12+00	13+00	14+00	15+00	16+00	17+00	18+00	19+00	20+00
683.8 / 683.61	686.6 / 686.66	689.7 / 689.73	692.8 / 692.83	695.3 / 695.35	697.3 / 697.38	697.5 / 697.47	696.7 / 696.67	695.0 / 694.93	692.6 / 692.70	689.4 / 689.39
685.2 / 685.15		688.1 / 688.19	691.3 / 691.28	694.2 / 694.20	696.9 / 696.93	697.3 / 697.19	696.0 / 695.92	693.8 / 693.90	691.4 / 691.26	

STA 9+91.42 - BEGIN
US 27 RAMP C

VPI 9+91.42
Elev 682.63

VPI 10+56.05
Elev 684.69

VPI 11+00.00
Elev 685.96

VPI 15+75.00
Elev 700.00

Sta 18+25.00 End Runoff & Begin Normal Section

Match Exist Pavement Elevations to Construct Transition to Existing Us 27

VPI 20+21.24
Elev 689.24

STA 20+21.24 - END
US 27 RAMP C

See I-471 for Continuation

2.81%
3.18%
2.88%
2.96%
-2.41%

US 27

Sta 9+91.42 US 27 Ramp C (Nose)

Sta 11+75.00 End Runoff & Begin Full Superelevation (e = 5.2%) (See Development Plan)

L 575 FT
SD 481 FT

US 27 RAMP C
PROFILE GRADE

Sta 15+70.00 End Full Superelevation (e = 5.2%) & Begin Runoff

Sta 19+25.00 End Normal Section & Begin Transition to US 27

SCALE: 1" = 50' HORIZONTAL
1" = 10' VERTICAL

8+00	9+00	10+00	11+00	12+00	13+00	14+00	15+00	16+00	17+00	18+00	19+00	20+00
		683.0 / 682.91	686.0 / 685.96	688.9 / 688.91	691.8 / 691.86	694.2 / 694.23	695.6 / 695.67	696.2 / 696.18	695.8 / 695.75	694.5 / 694.39	692.0 / 692.16	689.7 / 689.75
		684.5 / 684.50		687.4 / 687.43	690.4 / 690.39	693.1 / 693.16	695.0 / 695.07	696.0 / 696.04	696.1 / 696.08	695.2 / 695.19	693.3 / 693.36	691.0 / 690.96

PROFILE SHEET
STA 8+00 TO STA 20+00 (US 27 RAMP C)

DATUM: 640, 650, 660, 670, 680, 690, 700, 710, 720, 730

FILE NAME: P:\CIVIL\147\16-2021.00\CONTRACT PLANS AND PROPOSAL\CONTRACT PLAN SET\ROADWAY\R105OPF.DGN
USER: tvanbehren
DATE PLOTTED: January 2, 2012
E-SHEET NAME:
MicroStation v8.11.7.443

COUNTY OF	ITEM NO.	SHEET NO.
CAMPBELL	6-2021.00	R106

Preliminary Plans

KY 8 RAMP K

S 18°23'42" E

303 △ 302 △ 301 △ 298 △ 299 △ 294 △ 295 △

15+00 20+00 25+00 10+00 5+00 30+00 35+00

Conc Barrier Wall 5.0'

End Solid Conc Barrier Wall

6" Perf Pipe

100:1± Taper

50:1± Taper

Traffic Loops

Loops

Conc Barrier Wall 13.4'±

12'±

12'±12'±12'

Begin Bridge

Tapers

SIGN

Ramp Lights

Bridge Lights

Begin Bridge

Tapers

Ramp Lights

Bridge Lights

Begin Bridge

Tapers

Ramp Lights

Bridge Lights

℄ I-471

019B00082R

019B00039R

296+76.75

PT 297+61.80

℄ KY 8

Ohio River

I-471

P.I. STA. 293+53.92
Δ = 24°52'16" RT
C = 3°00'00"
T = 421.15'
L = 829.04'
R = 1909.86'
E = 45.88'
e = 4.4%

PT 14+89.53

PC 13+33.29

PC 289+32.76

PC 17+24.20

STA 14+89.53 - END
KY 8 RAMP A CONSTRUCTION

KY 8 RAMP A

P.I. STA. 17+13.30
Δ = 151°18'53" RT
C = 19°08'55"
T = 1170.23'
L = 790.21'
R = 299.22'
E = 908.67'
e = 6.0%

P.I. STA. 14+11.52
Δ = 7°23'46" RT
C = 4°44'01"
T = 78.23'
L = 156.24'
R = 1210.37'
E = 2.53'
e = 4.4%

KY 8 RAMP L

P.I. STA. 27+42.92
Δ = 4°12'03" RT
C = 1°00'00"
T = 210.13'
L = 420.08'
R = 5729.58'
E = 3.85'
e = Exist

STA 2+14 - BEGIN
KY 8 RAMP A CONSTRUCTION

PC 5+43.07

S52°48'3"E

KY 8 RAMP A

Old Conc

Asphalt

New Conc

Concrete Island

23.8'

POT 0+25.02

KY 8 RAMP L

N 82°16'46" W

N 52°42'11" W

PC 25+32.79

PT 29+52.69

POT 36+62.66

SSMH

MH

Inlet

JB

FEL

SCALE: 1"= 50'

PLAN

KY 8 RAMP A

MicroStation v8.11.7.443
E-SHEET NAME:
USER: tvonbehren
DATE PLOTTED: January 2, 2012
FILE NAME: P:\CIVIL\147\N6-2021.00\CONTRACT PLANS AND PROPOSAL\CONTRACT PLAN SET\ROADWAY\R106OOPL.DGN

COUNTY OF	ITEM NO.	SHEET NO.
CAMPBELL	6-2021.00	R107

Preliminary Plans

DATUM 530 520 510 500 490 480 470 460 450

1+00 2+00 3+00 4+00 5+00 6+00 7+00 8+00 9+00 10+00 11+00 12+00 13+00 14+00 15+00 16+00

LT EDGE OF PAVEMENT

Sta 14+89.53
I-471 NB (Nose)

STA 2+14 - BEGIN
KY 8 RAMP A CONSTRUCTION

SPLINE GRADE

VPI 2+13.96
Elev 495.83

VPI 4+00.00
Elev 497.89

VPI 6+50.00
Elev 500.89

VPI 9+00.00
Elev 503.65

VPI 10+50.00
Elev 505.52

VPI 12+25.00
Elev 507.23

VPI 14+89.50
Elev 509.34

See I-471 for Continuation

1.11% 1.10% 1.11% 1.09%

Sta 3+75.00 End Normal Section & Begin Runoff

Sta 5+50.00 End Runoff & Begin Full Superelevation (e = 6.0%)

Sta 13+16.25 End Full Superelevation (e = 2.1%) & Begin Runoff

Sta 13+91.61 End Runoff & Begin Full Superelevation (e = 4.4%)

STA 14+89.53 - END
KY 8 RAMP A CONSTRUCTION

RT EDGE OF PAVEMENT
PROFILE GRADE

SCALE: 1" = 50' HORIZONTAL
1" = 10' VERTICAL

495.7	496.2 496.23	496.8 496.78	497.3 497.34	497.9 497.89	498.4 498.42	499.1 499.06	499.7 499.74	500.4 500.32	500.9 500.89	501.5 501.45	502.0 502.00	502.6 502.55	503.1 503.10	503.6 503.65	504.2 504.20
504.8 504.76	505.3 505.32	505.8 505.87	506.3 506.41	506.9 506.96	507.5 507.49	507.9 507.86	508.3 508.26	508.7 508.71	509.0 509.06	509.4					

PROFILE
KY 8 RAMP A
STA 1+00 TO STA 16+00

FILE NAME: P:\CIVIL\147IN6-2021.00\CONTRACT PLANS AND PROPOSAL\CONTRACT PLAN SET\ROADWAY\R107OPF.DGN
USER: tvonbehren
DATE PLOTTED: January 2, 2012
E-SHEET NAME:
MicroStation v8.11.7.443

COUNTY OF	ITEM NO.	SHEET NO.
CAMPBELL	6-2021.00	R108

RAMP B
P.I. STA. 29+34.29
Δ = 39°22'30" LT
C = 4°01'52"
T = 514.01' Ts = 675.75'
Ls = 342.90'
Lc = 805.36'
θ = 6°54'40"
L.T.= 228.78'
S.T.= 114.46'
R = 1421.39'
Es = 90.08'
e = 6.3% to 0.12%

STA 32+38.58 - BEGIN RAMP B

32+00 33+00 34+00 35+00

CS 32+25.64

Match Exist

RAMP B

Match Exist

8' Shoulder (6' Paved)

8.0' Lt Sta 79+07.24 I-471 NB = Sta 35+42.26 Ramp B (Nose)

ST 35+68.54

8' to 12' Shoulder (4' to 10' Paved)

I-471 NB

Crown Line

I-471 NB

Crown Line

12' Shoulder (10' Paved)

76+00 77+00 78+00 79+00 80+00 81+00

TS 79+16.56

Sta 77+65.62 End Normal Section & Begin Runout

Sta 79+16.56 Flat Section Lt End Runout & Begin Runoff

Sta 80+67.50 Reverse Crown

I-471 NB
P.I. STA. 85+25.53
Δ = 24°51'57" RT
C = 3°01'54"
Ts = 608.97'
Ls = 400.00'
Lc = 620.18'
θ = 6°03'49"
L.T. = 266.82'
S.T. = 133.48'
R = 1889.86'
Es = 47.21'
e = 5.3%

Preliminary Plans

SCALE: 1"=20'

DEVELOPMENT SHEET
I-471 NB ~ STA 7+00 TO STA 81+00
RAMP B ~ STA 32+00 TO STA 35+00

MicroStation v8.11.7.443
E-SHEET NAME:
USER: tvonbehren
DATE PLOTTED: January 2, 2012
FILE NAME: P:\CIVIL\147\N6-2021.00\CONTRACT PLANS AND PROPOSAL\CONTRACT PLAN SET\ROADWAY\R108000S.DGN

COUNTY OF	ITEM NO.	SHEET NO.
CAMPBELL	6-2021.00	R109

RAMP E
P.I. STA. 12+25.44
Δ = 90°45'29" LT
C = 4°45'17"
Ts = 1225.44'
Ls = 311.56'
Lc = 1687.04'
θ = 10°32'32"
L.T.= 177.26'
S.T.= 135.15'
R = 1205.0'
Es = 513.64'
e = 7.0%

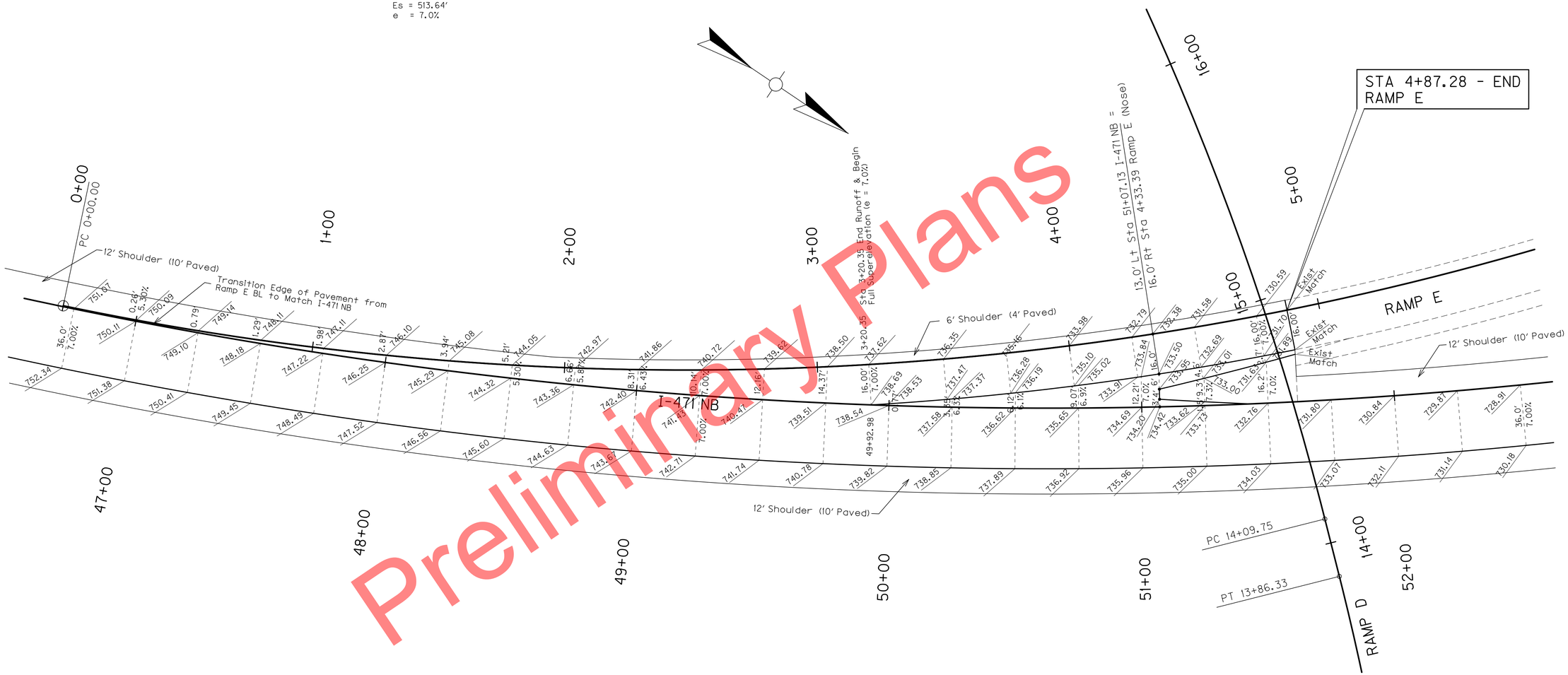

I-471 NB
P.I. STA. 52+73.01
Δ = 45°10'42" LT
C = 3°00'00"
Ts = 945.36'
Ls = 300.00'
Lc = 1205.95'
θ = 4°30'00"
L.T. = 200.06'
S.T. = 100.06'
R = 1909.86'
Es = 160.82'
e = 5.3%
Runout = 113.21'

Preliminary Plans

SCALE: 1"=20'

DEVELOPMENT SHEET
I-471 NB ~ STA 47+00 TO STA 52+00
RAMP E ~ STA 0+00 TO STA 5+00

MicroStation v8.11.7.443
E-SHEET NAME:
USER: Tvonbehren
DATE PLOTTED: January 2, 2012
FILE NAME: P:\CIVIL\147\N6-2021.00\CONTRACT PLANS AND PROPOSAL\CONTRACT PLAN SET\ROADWAY\R109000S.DGN

COUNTY OF	ITEM NO.	SHEET NO.
CAMPBELL	6-2021.00	R110

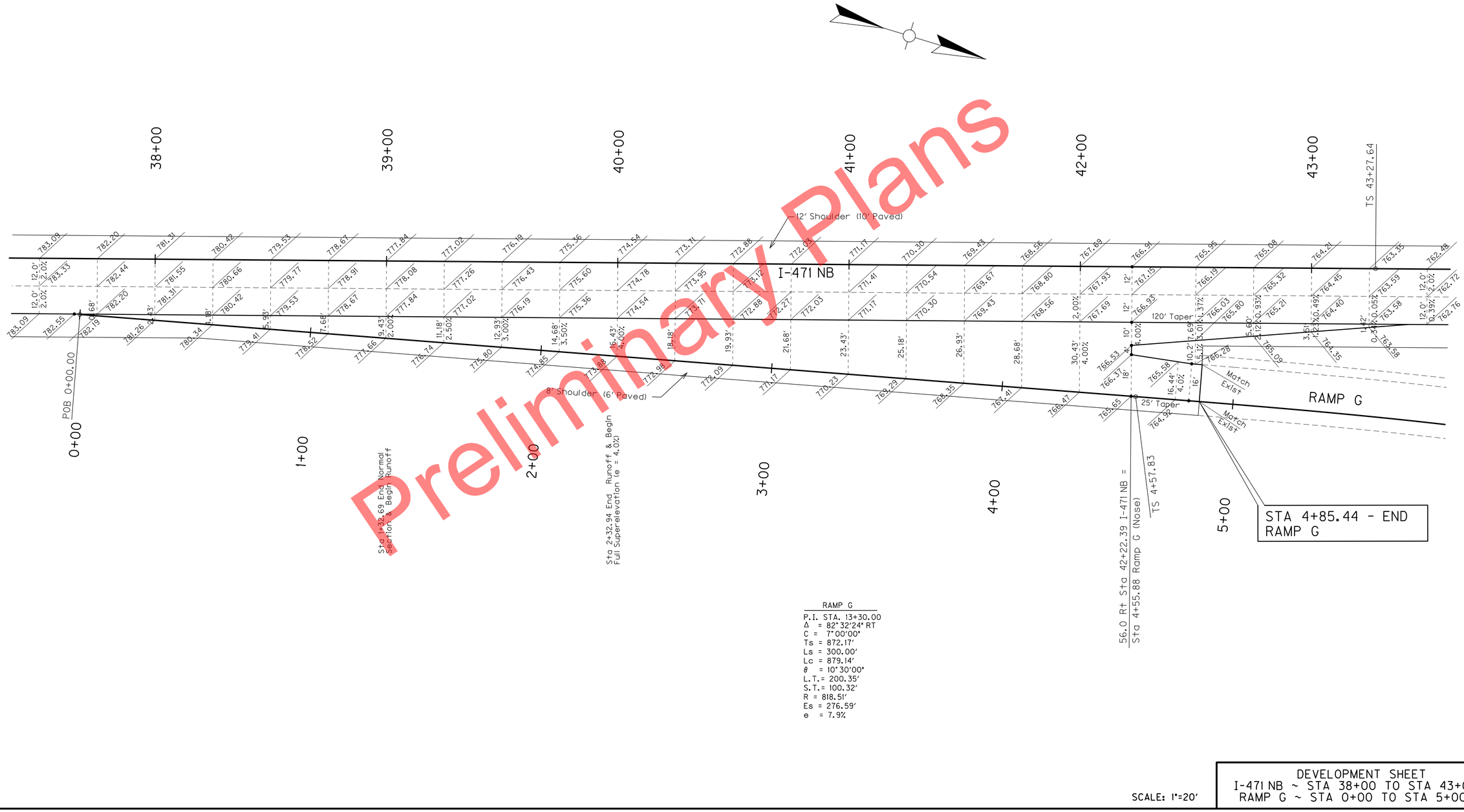

RAMP G
P.I. STA. 13+30.00
Δ = 82°32'24" RT
C = 7°00'00"
Ts = 872.17'
Ls = 300.00'
Lc = 879.14'
θ = 10°30'00"
L.T.= 200.35'
S.T.= 100.32'
R = 818.51'
Es = 276.59'
e = 7.9%

SCALE: 1"=20'

DEVELOPMENT SHEET
I-471 NB ~ STA 38+00 TO STA 43+00
RAMP G ~ STA 0+00 TO STA 5+00

MicroStation v8.11.7.443 | E-SHEET NAME: | USER: tvonbehren DATE PLOTTED: January 2, 2012 | FILE NAME: P:\CIVIL\471\N6-2021.00\CONTRACT PLANS AND PROPOSAL\CONTRACT PLAN SET\ROADWAY\R110000S.DGN

COUNTY OF	ITEM NO.	SHEET NO.
CAMPBELL	6-2021.00	R111

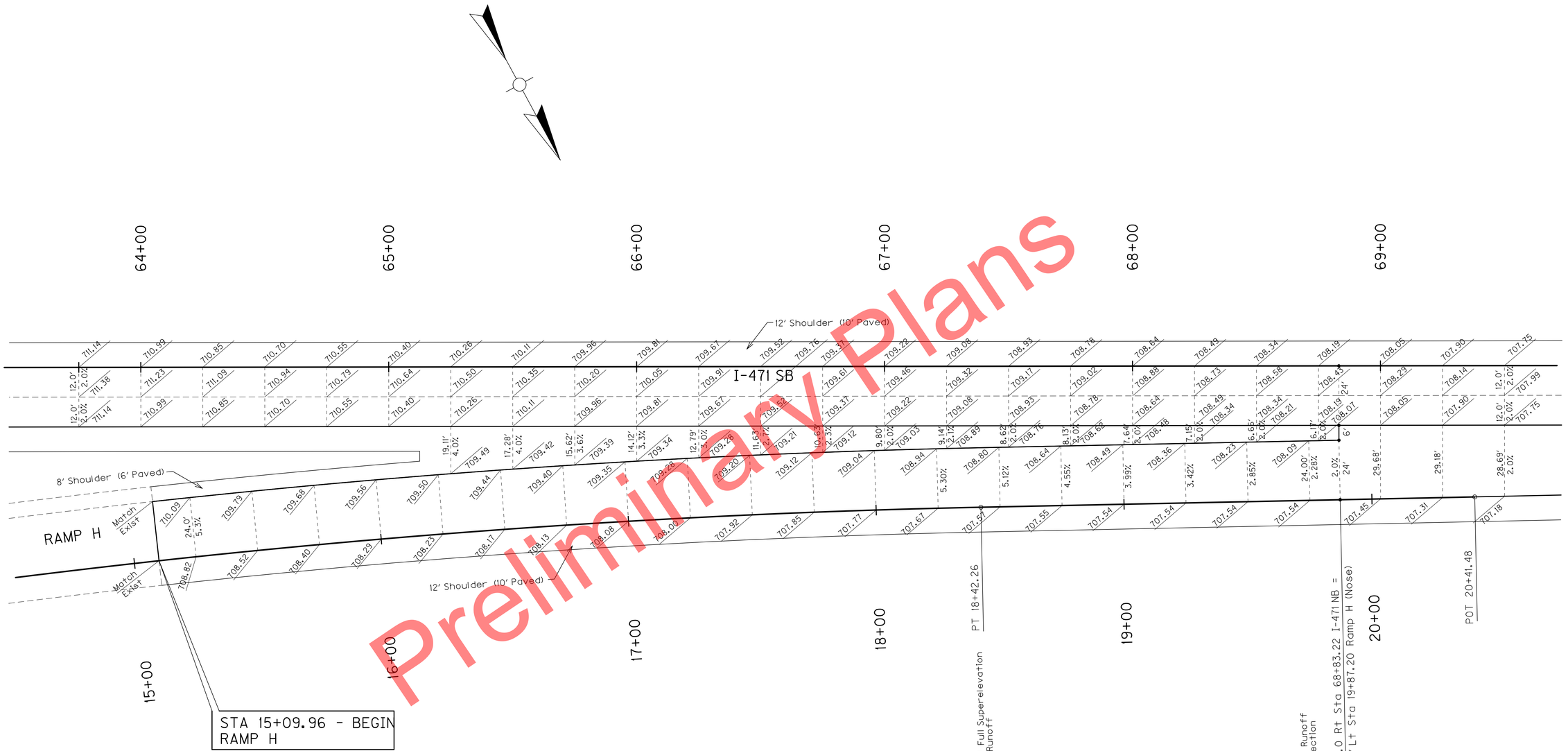

RAMP H

P.I. STA. 9+39.93
Δ = 28°00'47" RT
C = 1°31'14"
T = 939.93'
L = 1842.26'
R = 3768.00'
E = 115.46'
e = 5.3%
Runoff = 144.94'

Preliminary Plans

SCALE: 1"=20'

DEVELOPMENT SHEET
I-471 NB ~ STA 64+00 TO STA 69+00
RAMP H ~ STA 15+00 TO STA 20+00

FILE NAME: P:\CIVIL\147IN6-2021.00\CONTRACT PLANS AND PROPOSAL\CONTRACT PLAN SET\ROADWAY\R111OODS.DGN
USER: tvonbehren
DATE PLOTTED: January 2, 2012
E-SHEET NAME:
MicroStation v8.11.7.443

COUNTY OF	ITEM NO.	SHEET NO.
CAMPBELL	6-2021.00	R112

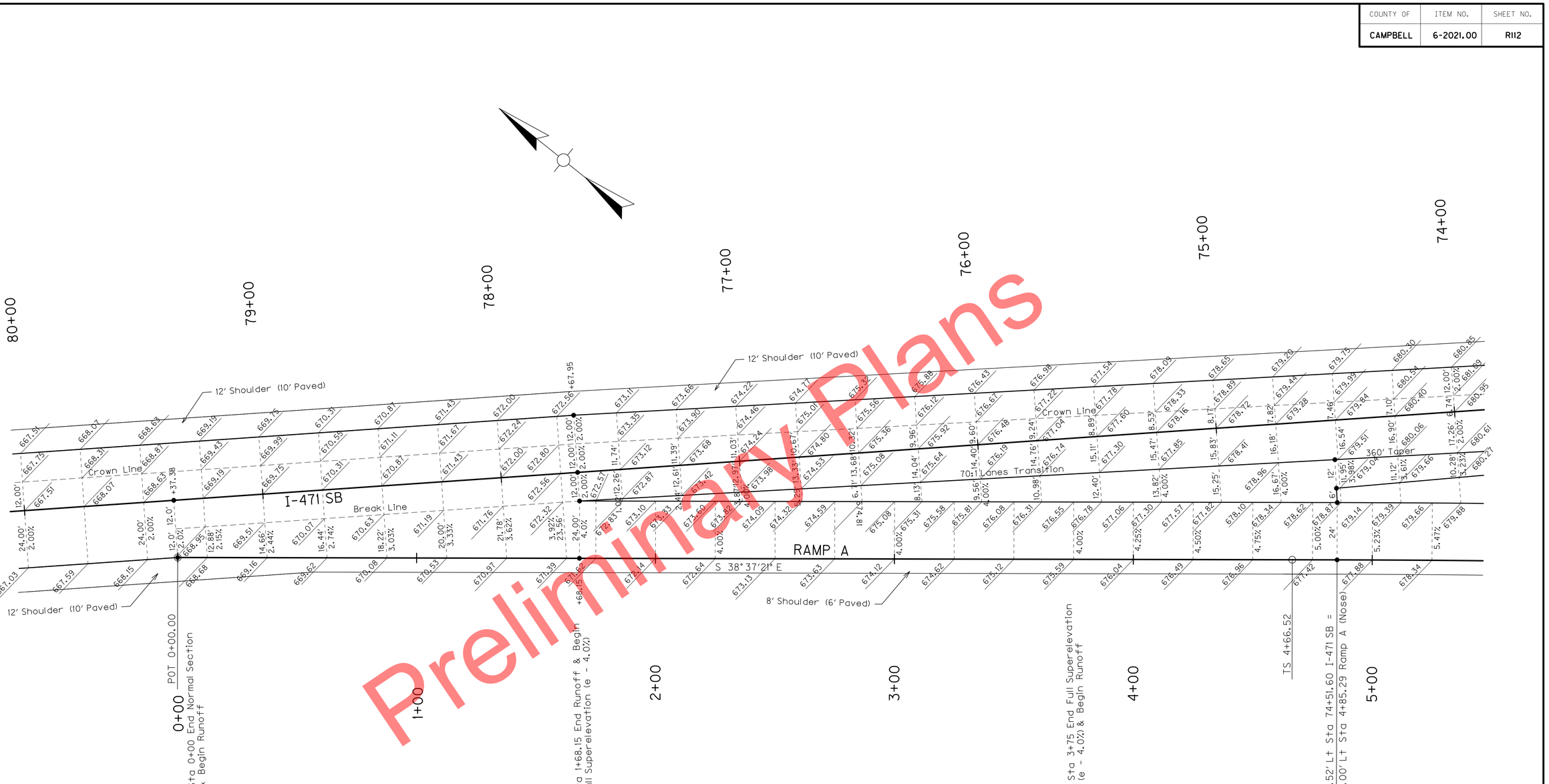

Preliminary Plans

SCALE: 1"=

DEVELOPMENT SHEET
I-471 SB ~ STA 74+00 TO STA 80+00
RAMP A ~ STA 0+00 TO STA 5+00

FILE NAME: P:\CIVIL\147\N6-2021.00\CONTRACT PLANS AND PROPOSAL\CONTRACT PLAN SET\ROADWAY\R112OOOS.DGN
USER: tvonbehren
DATE PLOTTED: January 2, 2012
E-SHEET NAME:
MicroStation v8.11.7.443

COUNTY OF	ITEM NO.	SHEET NO.
CAMPBELL	6-2021.00	R113

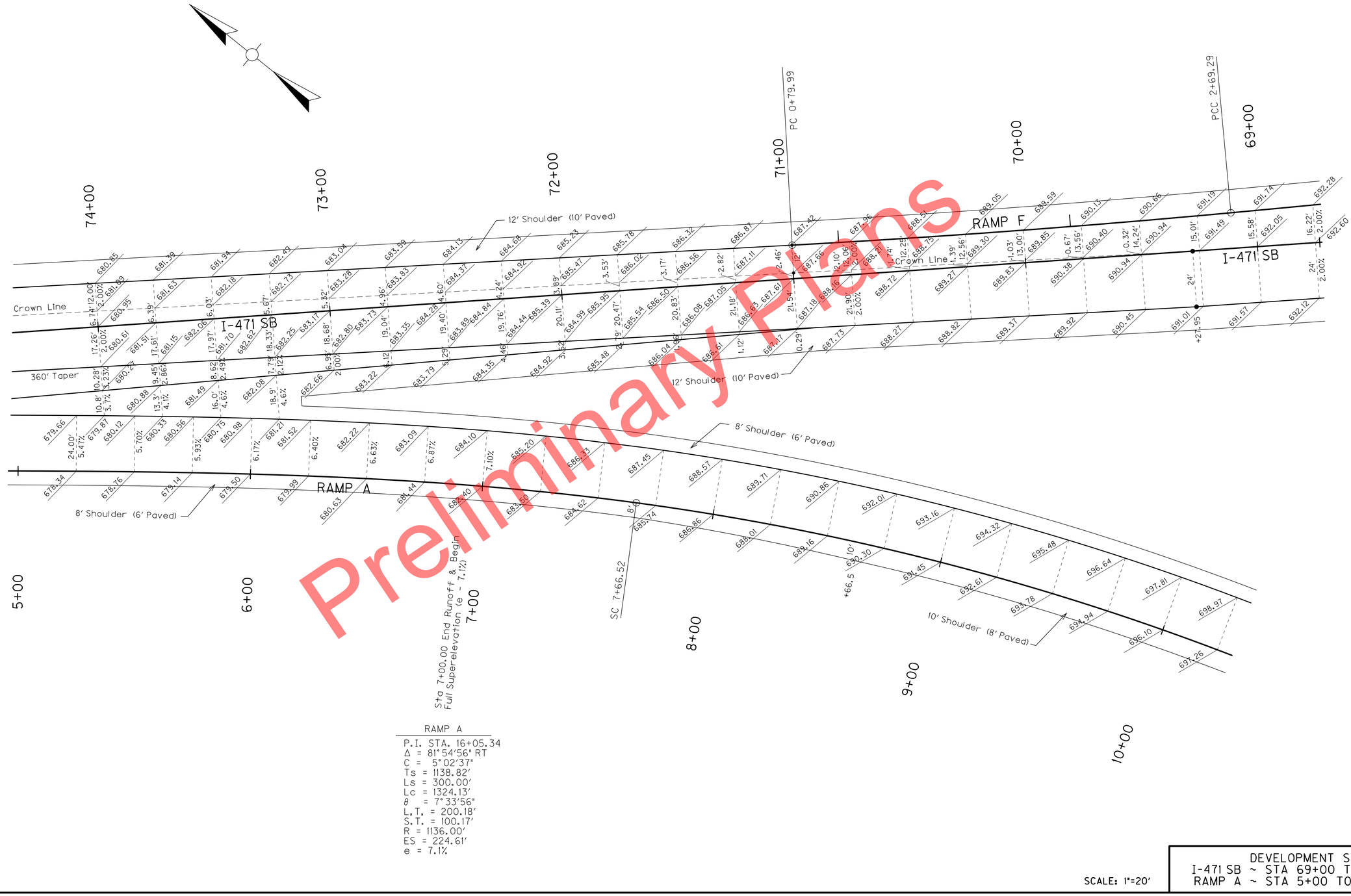

RAMP A

P.I. STA. 16+05.34
Δ = 81°54'56" RT
C = 5°02'37"
Ts = 1138.82'
Ls = 300.00'
Lc = 1324.13'
θ = 7°33'56"
L,T, = 200.18'
S.T. = 100.17'
R = 1136.00'
ES = 224.61'
e = 7.1%

SCALE: 1"=20'

DEVELOPMENT SHEET
I-471 SB ~ STA 69+00 TO STA 74+00
RAMP A ~ STA 5+00 TO STA 10+00

Preliminary Plans

MicroStation v8.11.7.443
E-SHEET NAME:
USER: tvonbehren
DATE PLOTTED: January 2, 2012
FILE NAME: P:\CIVIL\147\N6-2021.00\CONTRACT PLANS AND PROPOSAL\CONTRACT PLAN SET\ROADWAY\R113000S.DGN

COUNTY OF	ITEM NO.	SHEET NO.
CAMPBELL	6-2021.00	R114

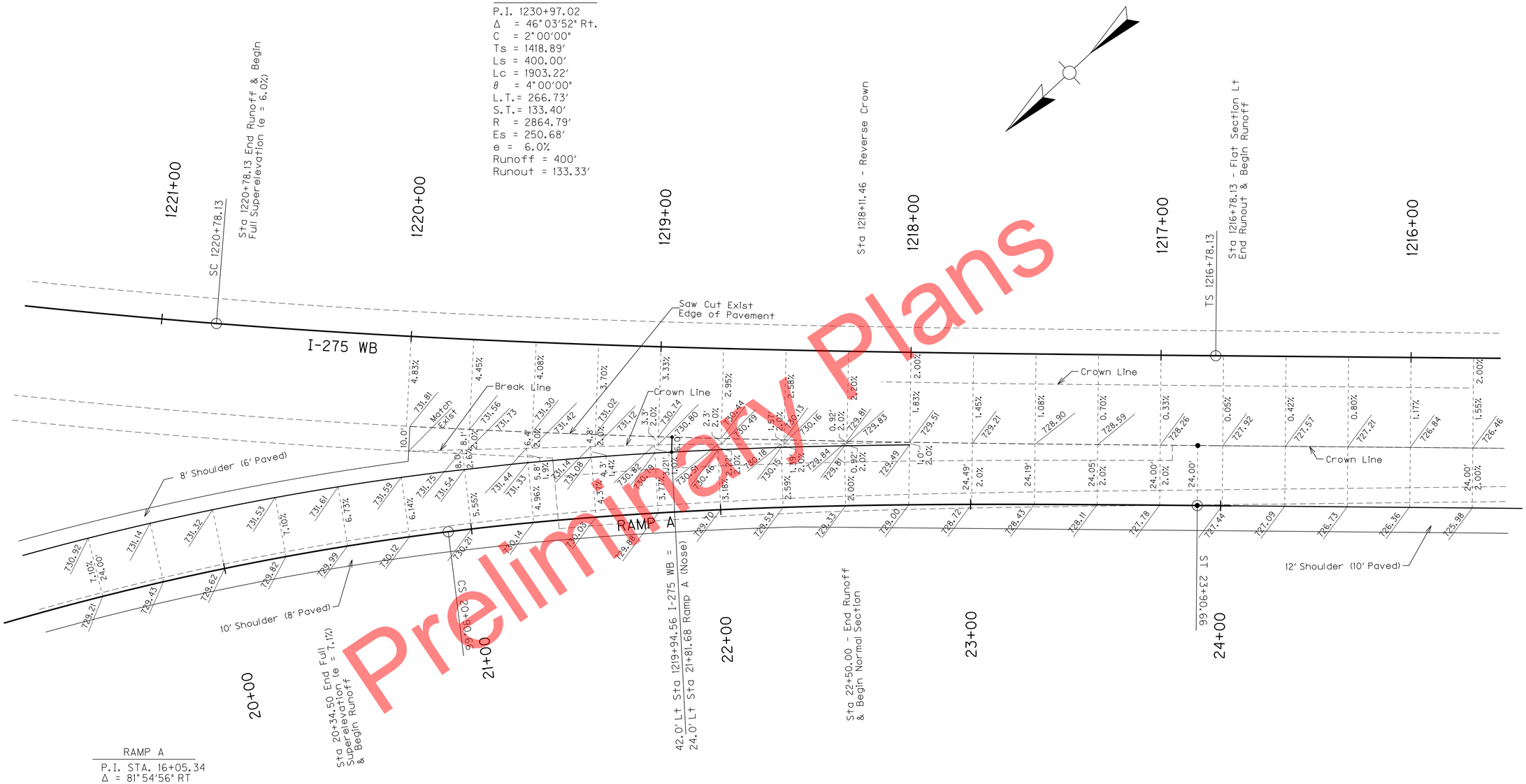

RAMP A

P.I. STA. 16+05.34
Δ = 81°54'56" RT
C = 5°02'37"
Ts = 1138.82'
Ls = 300.00'
Lc = 1324.13'
θ = 7°33'56"
L,T, = 200.18'
S.T. = 100.17'
R = 1136.00'
ES = 224.61'
e = 7.1%

Preliminary Plans

SCALE: 1"=20'

DEVELOPMENT SHEET
I-275 WB ~ STA 1216+00 TO STA 1221+00
RAMP A ~ STA 20+00 TO STA 24+00

MicroStation v8.11.7.443
E-SHEET NAME:
USER: tvonbehren
DATE PLOTTED: January 2, 2012
FILE NAME: P:\CIVIL\147IN6-2021.00\CONTRACT PLANS AND PROPOSAL\CONTRACT PLAN SET\ROADWAY\RI14ODS.DGN

COUNTY OF	ITEM NO.	SHEET NO.
CAMPBELL	6-2021.00	R115

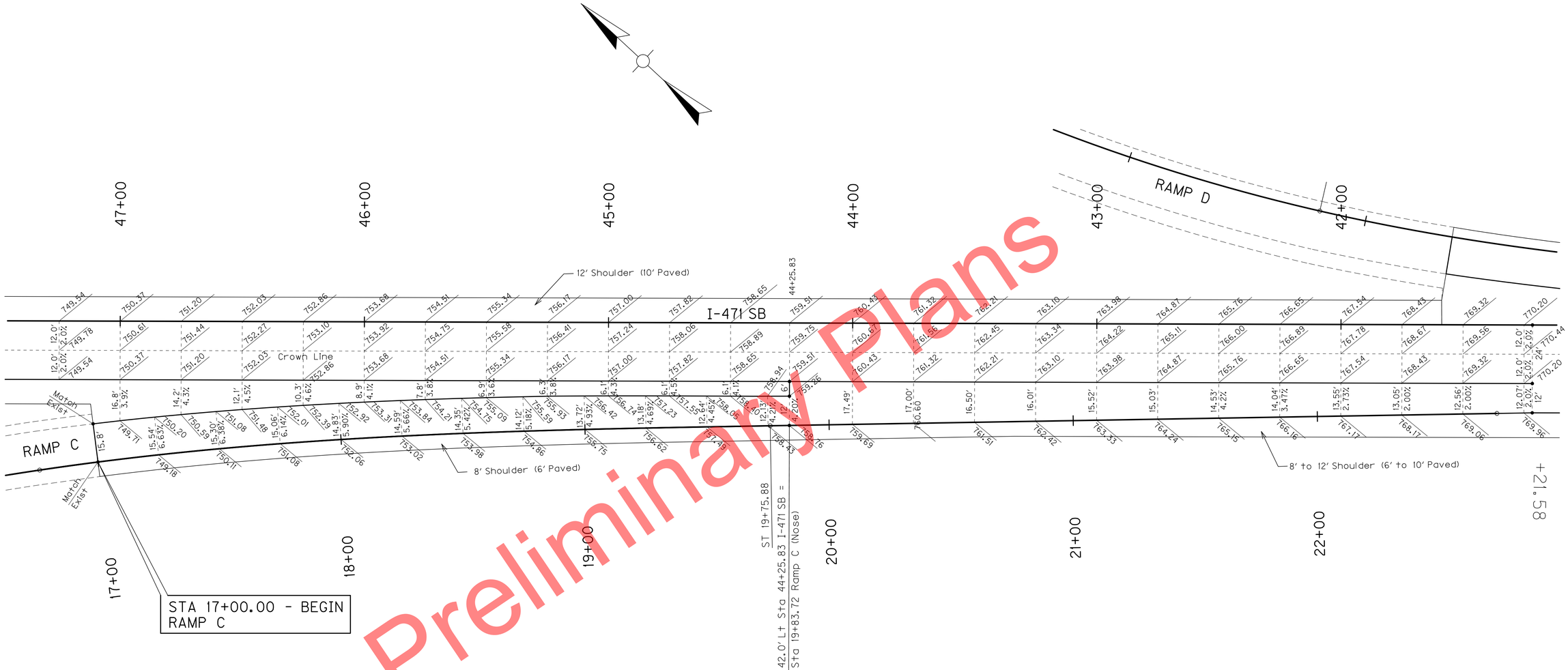

RAMP C

P.I. 12+82.05
Δ = 61°06'06" RT
C = 5°00'00"
Ts = 828.21'
Ls = 300.00'
Lc = 922.03'
θ = 7°30'00"
L.T.= 200.18'
S.T.= 100.16'
R = 1145.92'
Es = 188.52'
e = 6.9% to 4.2%

Preliminary Plans

SCALE: 1"=20'

DEVELOPMENT SHEET
I-471 SB ~ STA 42+00 TO STA 47+00
RAMP C ~ STA 17+00 TO STA 22+00

MicroStation v8.11.7.443
E-SHEET NAME:
USER: tvonbehren
DATE PLOTTED: January 2, 2012
FILE NAME: P:\CIVIL\471N6-2021.00\CONTRACT PLANS AND PROPOSAL\CONTRACT PLAN SET\ROADWAY\R115OODS.DGN

COUNTY OF	ITEM NO.	SHEET NO.
CAMPBELL	6-2021.00	R116

RAMP D

P.I. STA. 25+16.88
Δ = 50°50'50" LT
C = 7°03'43"
Ts = 427.74' Ts = 549.74'
L = 361.31'
R = 811.33'
Es = 91.58'
① Ls = 230.34'
θ = 13°38'33"
L.T. = 229.79'
S.T. = 123.10'
② Ls = 330.90'
θ = 11°41'03"
L.T. = 221.08'
S.T. = 110.74'
e = 7.9% to 4.2%

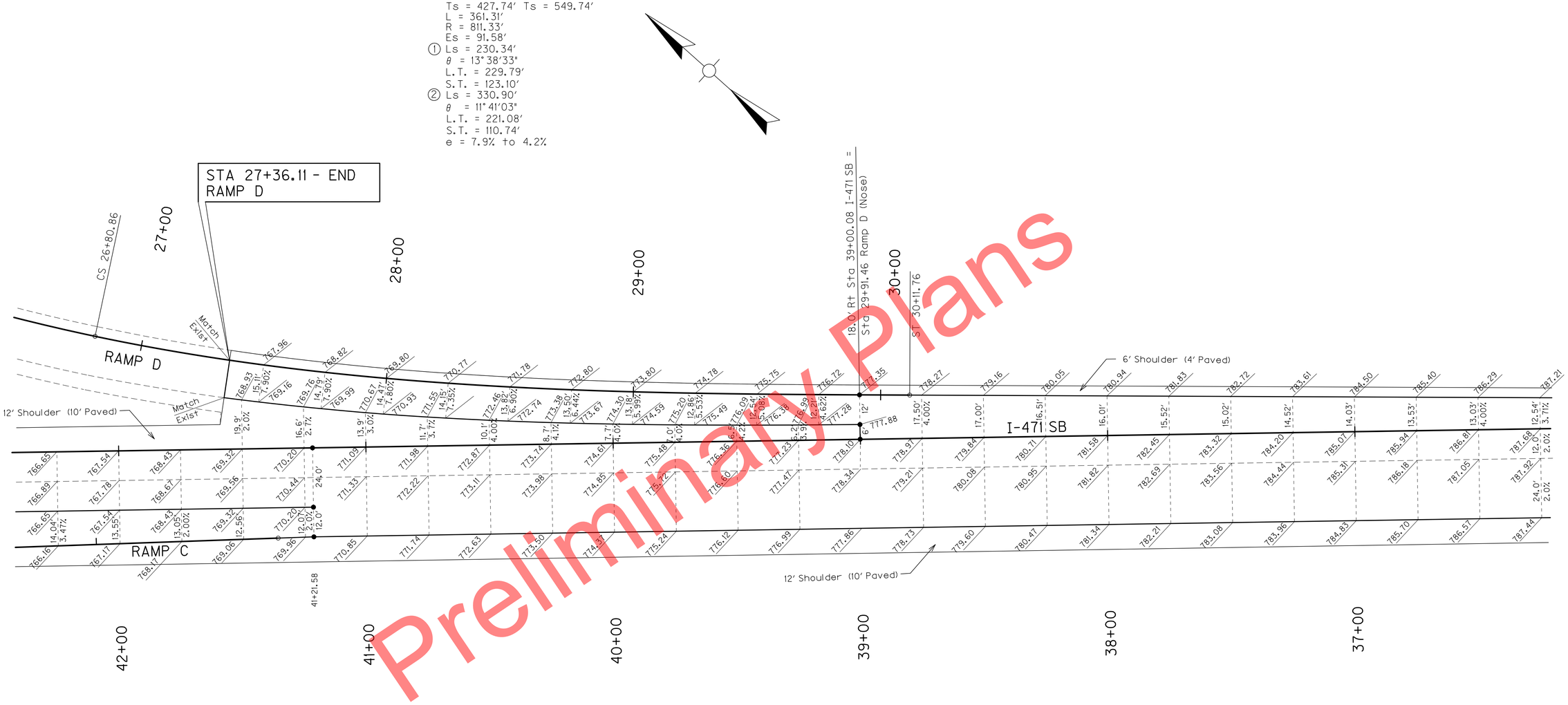

Preliminary Plans

SCALE: 1"=20'

DEVELOPMENT SHEET
I-471 SB ~ STA 37+00 TO STA 42+00
RAMP D ~ STA 27+00 TO STA 29+00

FILE NAME: P:\CIVIL\I471\6-2021.00\CONTRACT PLANS AND PROPOSAL\CONTRACT PLAN SET\ROADWAY\R116000S.DGN
USER: tvonbehren
DATE PLOTTED: January 2, 2012
E-SHEET NAME:
MicroStation v8.11.7.443

COUNTY OF	ITEM NO.	SHEET NO.
CAMPBELL	6-2021.00	R117

RAMP F
P.I. STA. 5+40.32
Δ = 2°38'52" LT
C = 0°29'18"
T = 271.03'
L = 541.96'
R = 11727.72'
E = 3.12'
e = 2.0%

RAMP F
P.I. STA. 18+06.07
Δ = 60°46'39" LT
C = 3°59'26"
Ts = 994.82' (1) Ts = 1020.88' (2)
Ls = 344.43' (1) Ls = 352.55' (2)
Lc = 1153.45'
θ = 7°42'49" (1) θ = 7°02'04" (2)
L.T.= 217.34' (1) L.T. = 235.22' (2)
S.T.= 127.55' (1) S.T. = 117.68' (2)
R = 1435.77'
Es = 233.62'
e = 8.0%

STA 9+75.00 - END
RAMP F

RAMP B

CS 8+11.25 Sta 62+62.88 I-471 SB =
17.0' Rt Sta 8+15.78 Ramp F (Nose)
24.0' Rt

Sta 8+11.25 End Normal Section & Begin Runoff

4+00 5+00 6+00 7+00 8+00 9+00 10+00

I-471 SB

RAMP F

12' Shoulder (10' Paved)

Exist Match

20' Taper

36' Taper

12' Shoulder (10' Paved)

67+00 66+00 65+00 64+00 63+00 62+00

Preliminary Plans

SCALE: 1"=20'

DEVELOPMENT SHEET
I-471 SB ~ STA 62+00 TO STA 67+00
RAMP F ~ STA 4+00 TO STA 10+00

MicroStation v8.11.7.443
E-SHEET NAME:
USER: tvonbehren
DATE PLOTTED: January 2, 2012
FILE NAME: P:\CIVIL\471\6-2021.00\CONTRACT PLANS AND PROPOSAL\CONTRACT PLAN SET\ROADWAY\R117OODS.DGN

COUNTY OF	ITEM NO.	SHEET NO.
CAMPBELL	6-2021.00	R118

P.I. STA. 162+39.08
Δ = 82°09'02" LT
C = 3°59'24"
Ts = 1560.27'
Ls 600.00'
Lc = 1458.93'
θ = 11°58'12"
L.T. = 400.92'
S.T. = 200.84'
R = 1436.00'
Es = 482.73'
e = 6.3%
Runout = 150'

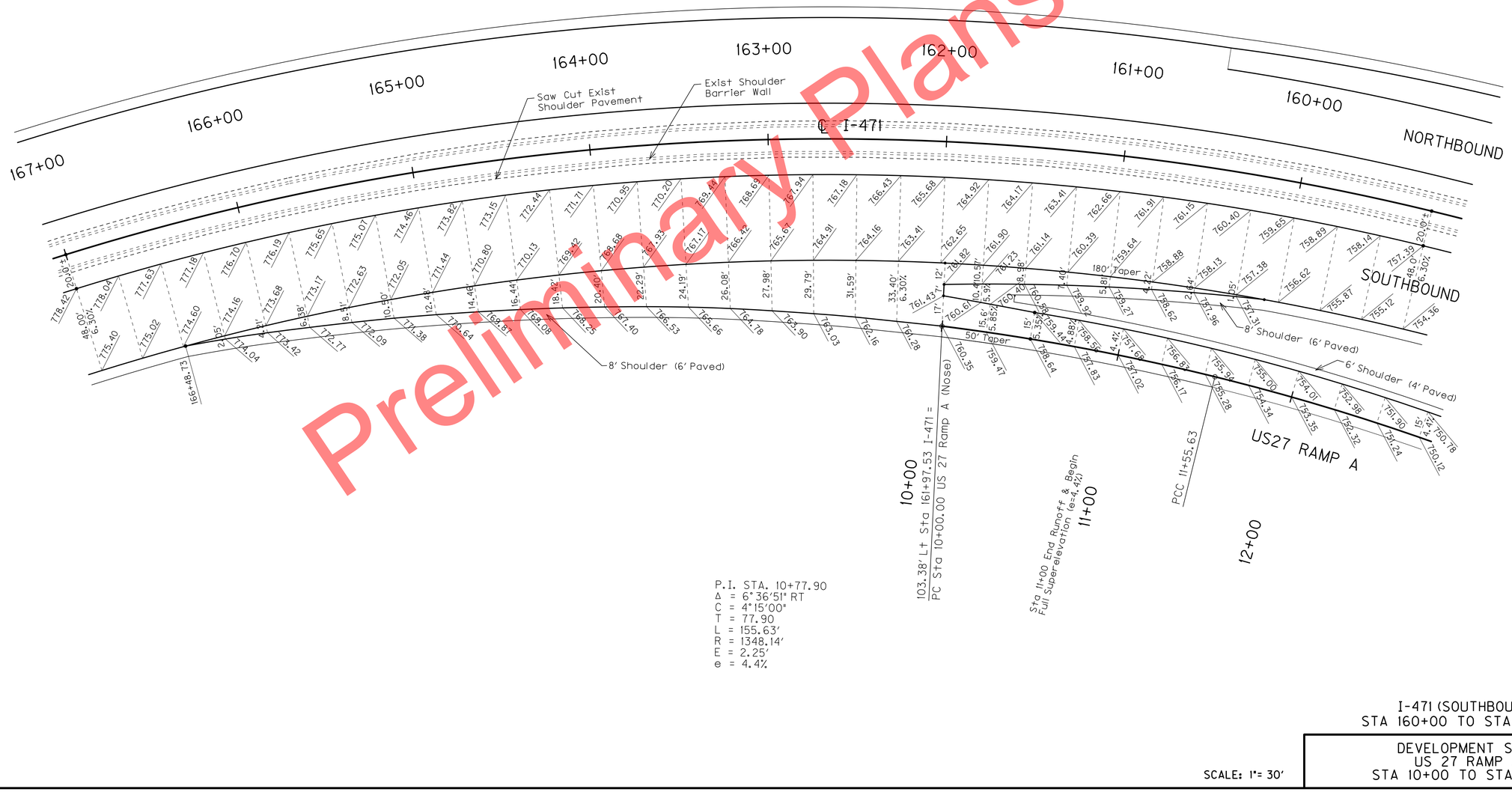

P.I. STA. 10+77.90
Δ = 6°36'51" RT
C = 4°15'00"
T = 77.90
L = 155.63'
R = 1348.14'
E = 2.25'
e = 4.4%

Preliminary Plans

I-471 (SOUTHBOUND)
STA 160+00 TO STA 167+00

DEVELOPMENT SHEET
US 27 RAMP A
STA 10+00 TO STA 12+00

SCALE: 1"= 30'

MicroStation v8.11.7.443
E-SHEET NAME:
USER: tvonbehren
DATE PLOTTED: January 2, 2012
FILE NAME: P:\CIVIL\147IN\6-2021.00\CONTRACT PLANS AND PROPOSAL\CONTRACT PLAN SET\ROADWAY\R118000S.DGN

COUNTY OF	ITEM NO.	SHEET NO.
CAMPBELL	6-2021.00	R119

P.I. STA. 162+39.08
Δ = 82°09'02" LT
C = 3°59'24"
Ts = 1560.27'
Ls 600.00'
Lc = 1458.93'
θ = 11°58'12"
L.T. = 400.92'
S.T. = 200.84'
R = 1436.00'
Es = 482.73'
e = 6.3%
Runout = 190.48'

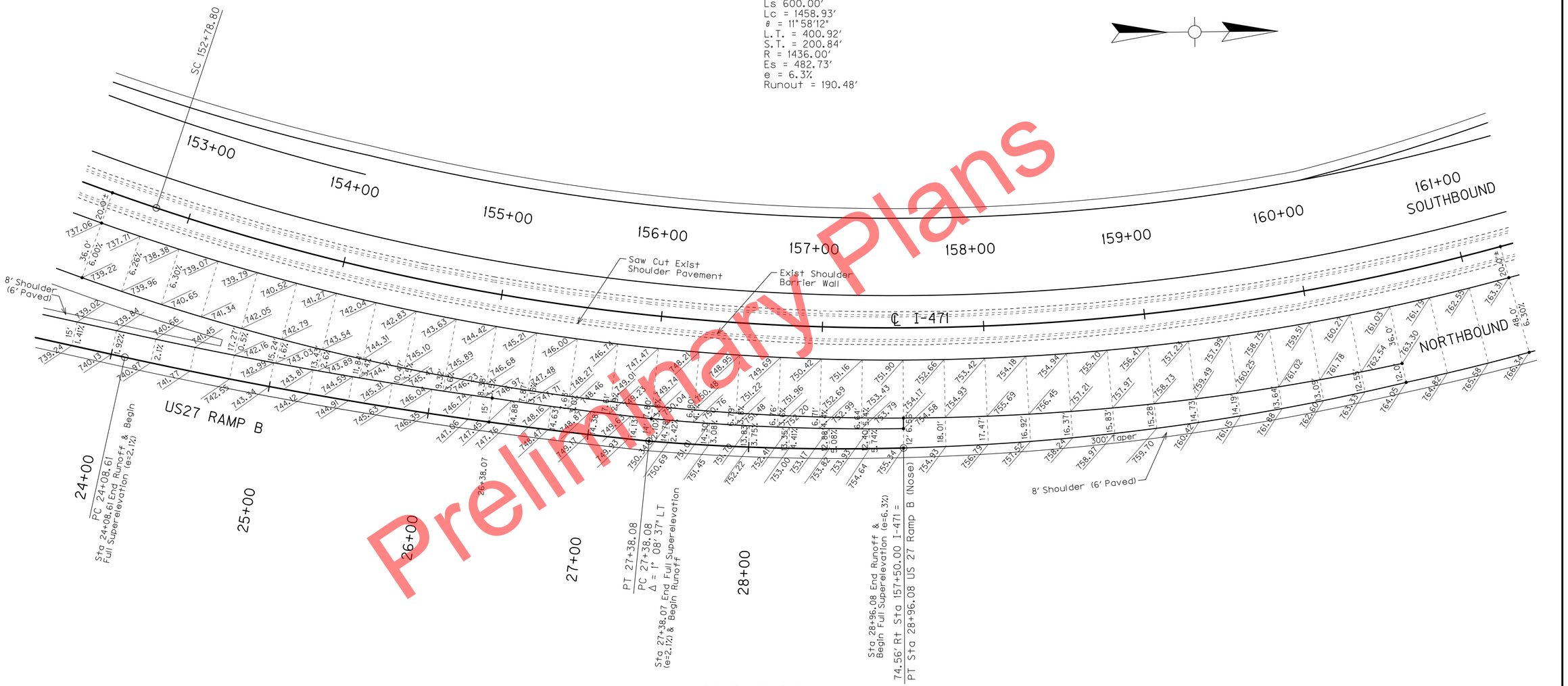

P.I. STA. 25+73.52
Δ = 6°35'21" LT
C = 2°00'00"
T = 164.91'
L = 329.46'
R = 2864.79'
E = 4.74'
e = 2.1%

P.I. STA. 28+17.15
Δ = 6°12'29" LT
C = 3°55'45"
T = 79.08'
L = 158.00'
R = 1458.20'
E = 2.14'
e = 2.1% to 6.3%

Preliminary Plans

I-471 (NORTHBOUND)
STA 153+00 TO STA 160+00

DEVELOPMENT SHEET
US 27 RAMP B
STA 24+00 TO STA 28+00

SCALE: 1"= 30'

MicroStation v8.11.7.443 | E-SHEET NAME: | USER: tvonbehren | DATE PLOTTED: January 2, 2012 | FILE NAME: P:\CIVIL\471N6-2021.00\CONTRACT PLANS AND PROPOSAL\CONTRACT PLAN SET\ROADWAY\R119DDS.DGN

COUNTY OF	ITEM NO.	SHEET NO.
CAMPBELL	6-2021.00	R120

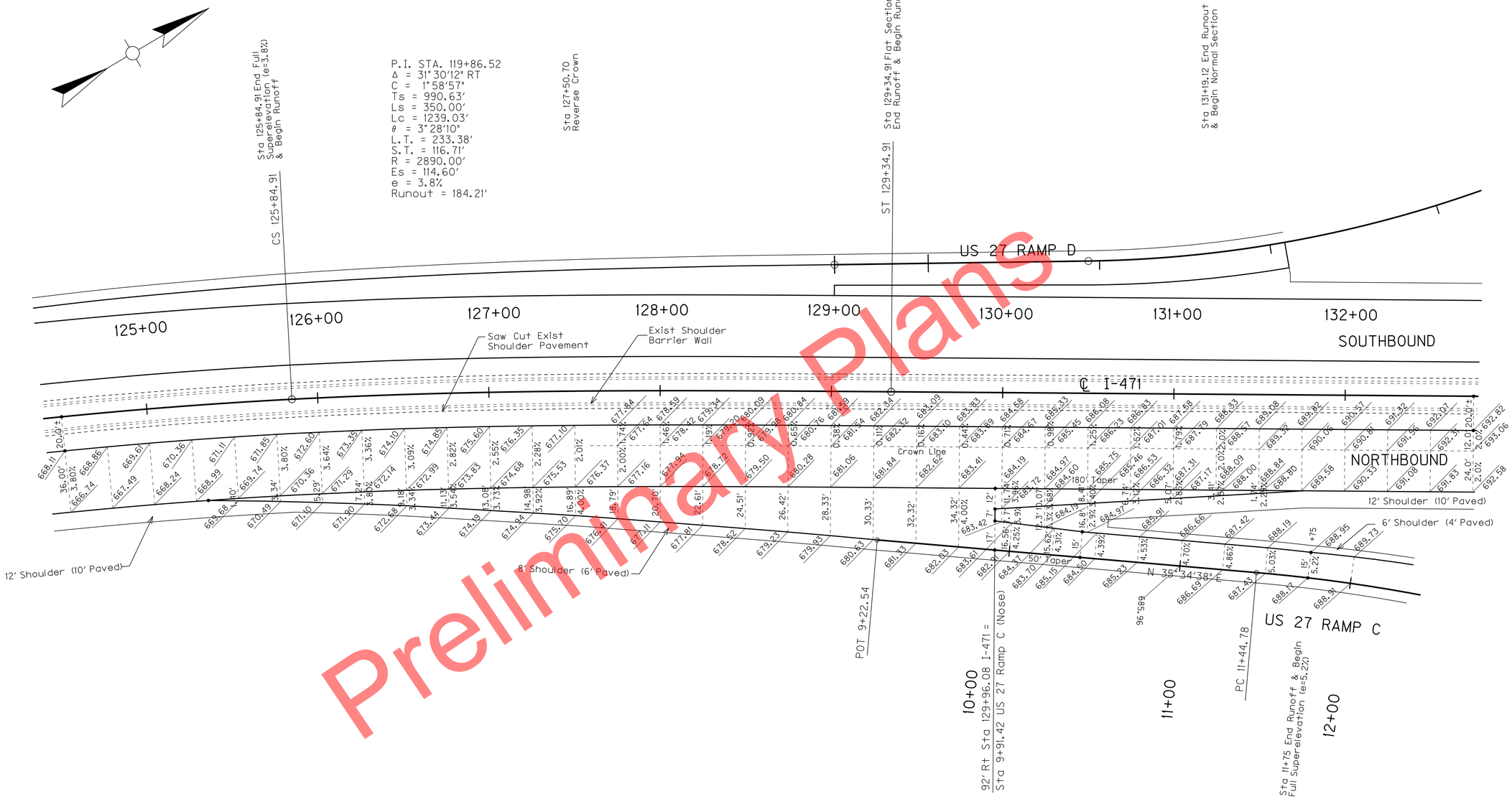

Preliminary Plans

P.I. STA. 13+76.64
Δ = 27°17'44" RT
C = 6°00'00"
T = 231.86'
L = 454.93'
R = 954.93'
E = 27.75'
e = 5.2%

I-471 (NORTHBOUND)
STA 125+00 TO STA 132+00

DEVELOPMENT SHEET
US 27 RAMP C
STA 10+00 TO STA 12+00

SCALE: 1"= 30'

MicroStation v8.11.7.443 | E-SHEET NAME: | USER: tvonbehren DATE PLOTTED: January 2, 2012 | FILE NAME: P:\CIVIL\47IN6-2021.00\CONTRACT PLANS AND PROPOSAL\CONTRACT PLAN SET\ROADWAY\R120000S.DGN

COUNTY OF	ITEM NO.	SHEET NO.
CAMPBELL	6-2021.00	R121

P.I. STA. 119+86.52
Δ = 31°30'12" RT
C = 1°58'57"
Ts = 990.63'
Ls = 350.00'
Lc = 1239.03'
θ = 3°28'10"
L.T. = 233.38'
S.T. = 116.71'
R = 2890.00'
Es = 114.60'
e = 3.8%
Runout = 184.21'

Sta 131+19.12 End Runout
& Begin Normal Section

ST 129+34.91

Sta 129+34.91 Flat Section L+
End Runoff & Begin Runout

Sta 127+50.70
Reverse Crown

CS 125+84.91

Sta 125+84.91 End Full
Superelevation (e=3.8%)
& Begin Runoff

US27 RAMP C

132+00 131+00 130+00 129+00 128+00 127+00 126+00 125+00 124+00

NORTHBOUND

N 31°05'12.15" E

℄ I-471

SOUTHBOUND

12' Shoulder
(10' Paved)

8' Shoulder (6' Paved)

900' Taper

US27 RAMP D

22+00 23+00 24+00 25+00

Sta 25+54.69 Flat Section
& End Transition From
Exist Pavement

PT 24+04.20

Sta 25+31.45 Flat Section - End
Runoff Bk & Begin Runoff Ahd
74' Lt Sta 129+01.32 I-471 =
POT Sta 25+54.14 US 27 Ramp C (Nose)

P.I. STA. 22+43.80
Δ = 26°07'36" RT
C = 8°00'00"
T = 166.18'
L = 326.58'
R = 716.20'
E = 19.03'
e = 6.2%

Preliminary Plans

I-471 (SOUTHBOUND)
STA 124+00 TO STA 132+00

SCALE: 1"= 30'

DEVELOPMENT SHEET
US 27 RAMP D
STA 22+00 TO STA 25+00

MicroStation v8.11.7.443 | E-SHEET NAME: | USER: tvonbehren DATE PLOTTED: January 2, 2012 | FILE NAME: P:\CIVIL\471\6-2021.00\CONTRACT PLANS AND PROPOSAL\CONTRACT PLAN SET\ROADWAY\R121OODS.DGN

COUNTY OF	ITEM NO.	SHEET NO.
CAMPBELL	6-2021.00	R122

P.I. STA. 187+79.88
Δ = 33°57'14" RT
C = 1°59'39"
Ts = 1052.62'
Ls = 350.00'
Lc = 1352.56'
θ = 3°29'24"
L.T. = 233.38'
S.T. = 116.71'
R = 2873.00'
Es = 132.76'
e = 3.8%
Runout = 184.2'

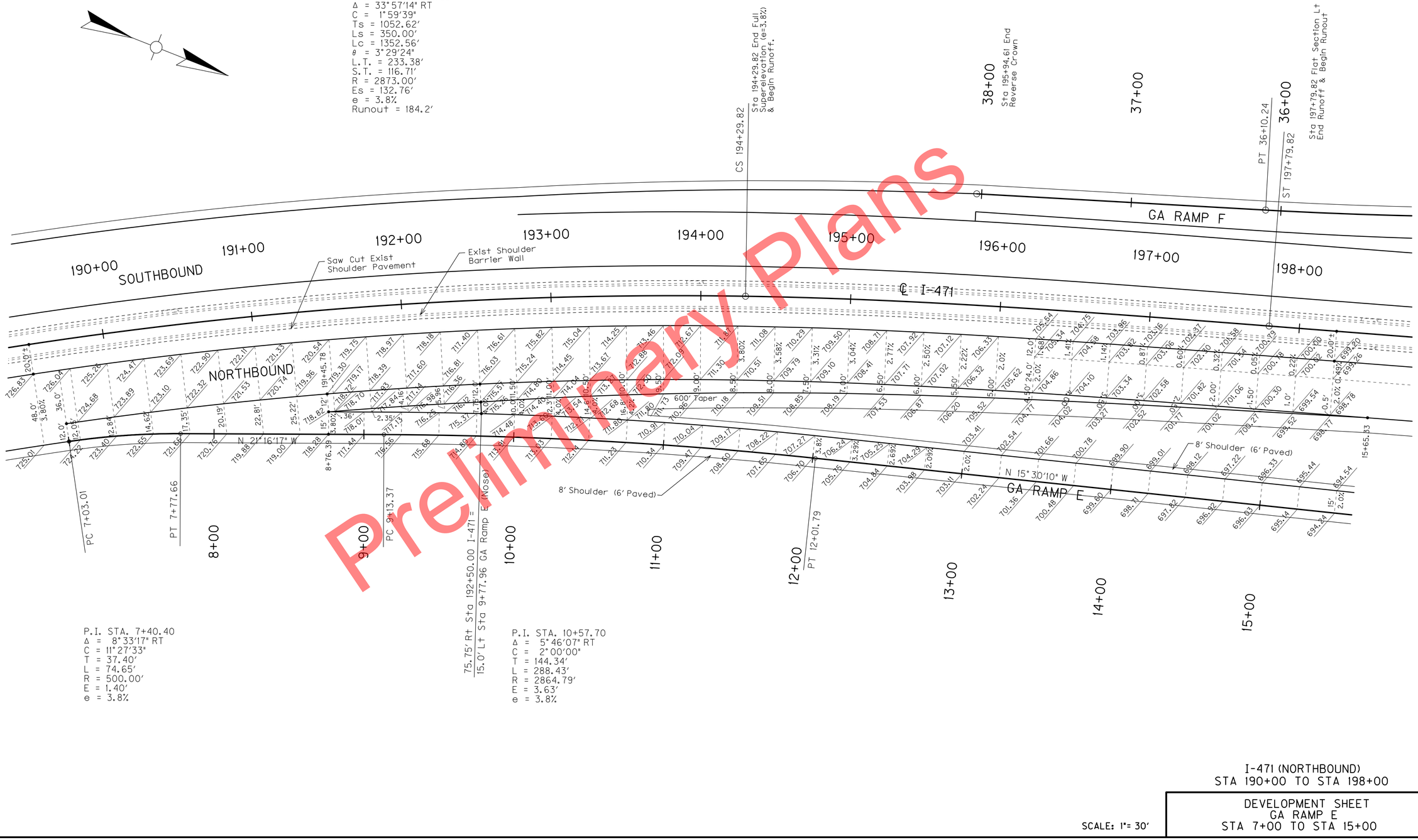

P.I. STA. 7+40.40
Δ = 8°33'17" RT
C = 11°27'33"
T = 37.40'
L = 74.65'
R = 500.00'
E = 1.40'
e = 3.8%

75.75' Rt Sta 192+50.00 I-471 =
15.0' Lt Sta 9+77.96 GA Ramp E (Nose)

P.I. STA. 10+57.70
Δ = 5°46'07" RT
C = 2°00'00"
T = 144.34'
L = 288.43'
R = 2864.79'
E = 3.63'
e = 3.8%

Preliminary Plans

I-471 (NORTHBOUND)
STA 190+00 TO STA 198+00

SCALE: 1"= 30'

DEVELOPMENT SHEET
GA RAMP E
STA 7+00 TO STA 15+00

MicroStation v8.11.7.443 | E-SHEET NAME: | USER: tvonbehren DATE PLOTTED: January 2, 2012 | FILE NAME: P:\CIVIL\147IN6-2021.00\CONTRACT PLANS AND PROPOSAL\CONTRACT PLAN SET\ROADWAY\R122000S.DGN

COUNTY OF	ITEM NO.	SHEET NO.
CAMPBELL	6-2021.00	R123

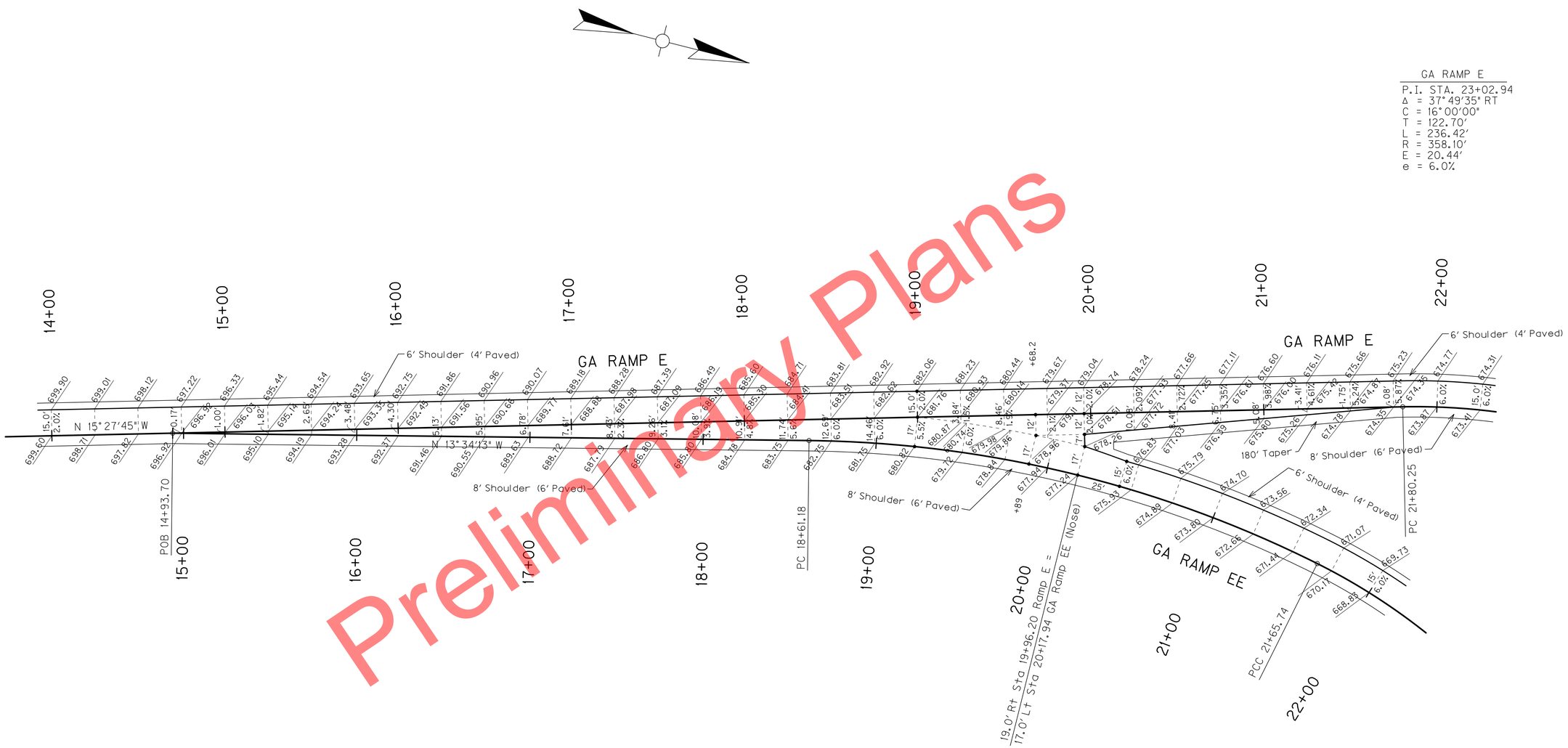

Preliminary Plans

GA RAMP EE

P.I. STA. 20+16.11	P.I. STA. 23+17.18	P.I. STA. 25+01.18
Δ = 25°53'27" RT	Δ = 45°51'29" RT	Δ = 58°40'33" RT
C = 8°30'03"	C = 16°00'16"	C = 65°51'26"
T = 154.93'	T = 151.44'	T = 48.90'
L = 304.57'	L = 286.53'	L = 89.10'
R = 674.00'	R = 358.0'	R = 87.0'
E = 17.58'	E = 30.71'	E = 12.80'
e = 6.0%	e = 6.0%	e = Var

SCALE: 1"= 30'

DEVELOPMENT SHEET
STA 14+00 TO STA 21+00 GA RAMP E
STA 15+00 TO STA 21+00 GA RAMP EE

MicroStation v8.11.7.443
E-SHEET NAME:
USER: tvonbehren
DATE PLOTTED: January 2, 2012
FILE NAME: P:\CIVIL\147\N6-2021.00\CONTRACT PLANS AND PROPOSAL\CONTRACT PLAN SET\ROADWAY\R123GDDS.DGN

COUNTY OF	ITEM NO.	SHEET NO.
CAMPBELL	6-2021.00	RI24

Preliminary Plans

P.I. STA. 187+79.88
Δ = 33°57'14" RT
C = 1°59'39"
Ts = 1052.62'
Ls = 350.00'
Lc = 1352.56'
θ = 3°29'24"
L.T. = 233.38'
S.T. = 116.71'
R = 2873.00'
Es = 132.76'
e = 3.8%
Runout = 184.2'

Sta 199+64.03 End Rouout & Begin Normal Section

Sta 197+79.82 Flat Section Lt End Runoff & Begin Runout

Sta 195+94.61 End Reverse Crown

PT 12+01.79

Sta 194+29.82 End Full Superelevation (e=3.8%) & Begin Runoff.

8' Shoulder (6' Paved)

PC 9+13.37

GA RAMP E

SIT 197+79.82

CS 194+29.82

Saw Cut Exist Shoulder Pavement

Exist Shoulder Barrier Wall

℄ I-471

NORTHBOUND

SOUTHBOUND

GA RAMP F

PC 33+12.20

PT 36+10.24

74.30' Lt Sta 195+79.96 I-471 = Sta 38+03.28 GA Ramp F (Nose)

Sta 36+10.24 End Full Superelevation (e=3.8%) & Begin Runoff.

GA RAMP F

P.I. STA. 34+61.35
Δ = 5°57'39" RT
C = 2°00'00"
T = 149.15'
L = 298.04'
R = 2864.79'
E = 3.88'
e = 3.8%

I-471 (SOUTHBOUND)
STA 192+00 TO STA 200+00

DEVELOPMENT SHEET
GA RAMP F
STA 32+00 TO STA 38+00

SCALE: 1"= 30'

MicroStation v8.11.7.443 | E-SHEET NAME: | USER: tvonbehren DATE PLOTTED: January 2, 2012 | FILE NAME: P:\CIVIL\I471\6-2021.00\CONTRACT PLANS AND PROPOSAL\CONTRACT PLAN SET\ROADWAY\RI24000S.DGN

COUNTY OF	ITEM NO.	SHEET NO.
CAMPBELL	6-2021.00	R125

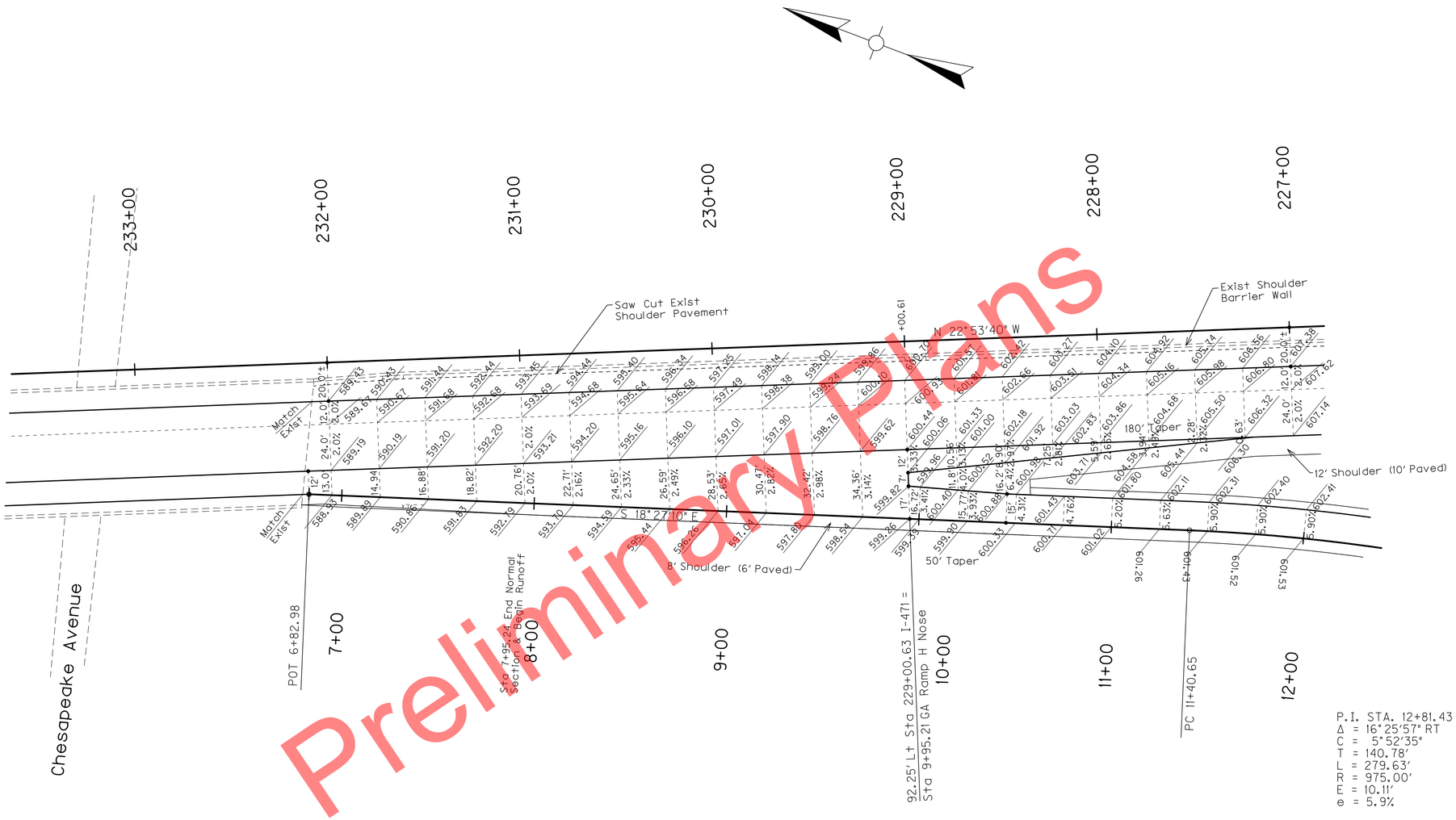

Preliminary Plans

I-471 (SOUTHBOUND)
STA 227+00 TO STA 233+00

DEVELOPMENT SHEET
GA RAMP H
STA 7+00 TO STA 12+00

SCALE: 1"= 30'

MicroStation v8.11.7.443 | E-SHEET NAME: | USER: tvonbehren DATE PLOTTED: January 2, 2012 | FILE NAME: P:\CIVIL\147N6-2021.00\CONTRACT PLANS AND PROPOSAL\CONTRACT PLAN SET\ROADWAY\R125000S.DGN

COUNTY OF	ITEM NO.	SHEET NO.
CAMPBELL	6-2021.00	R126

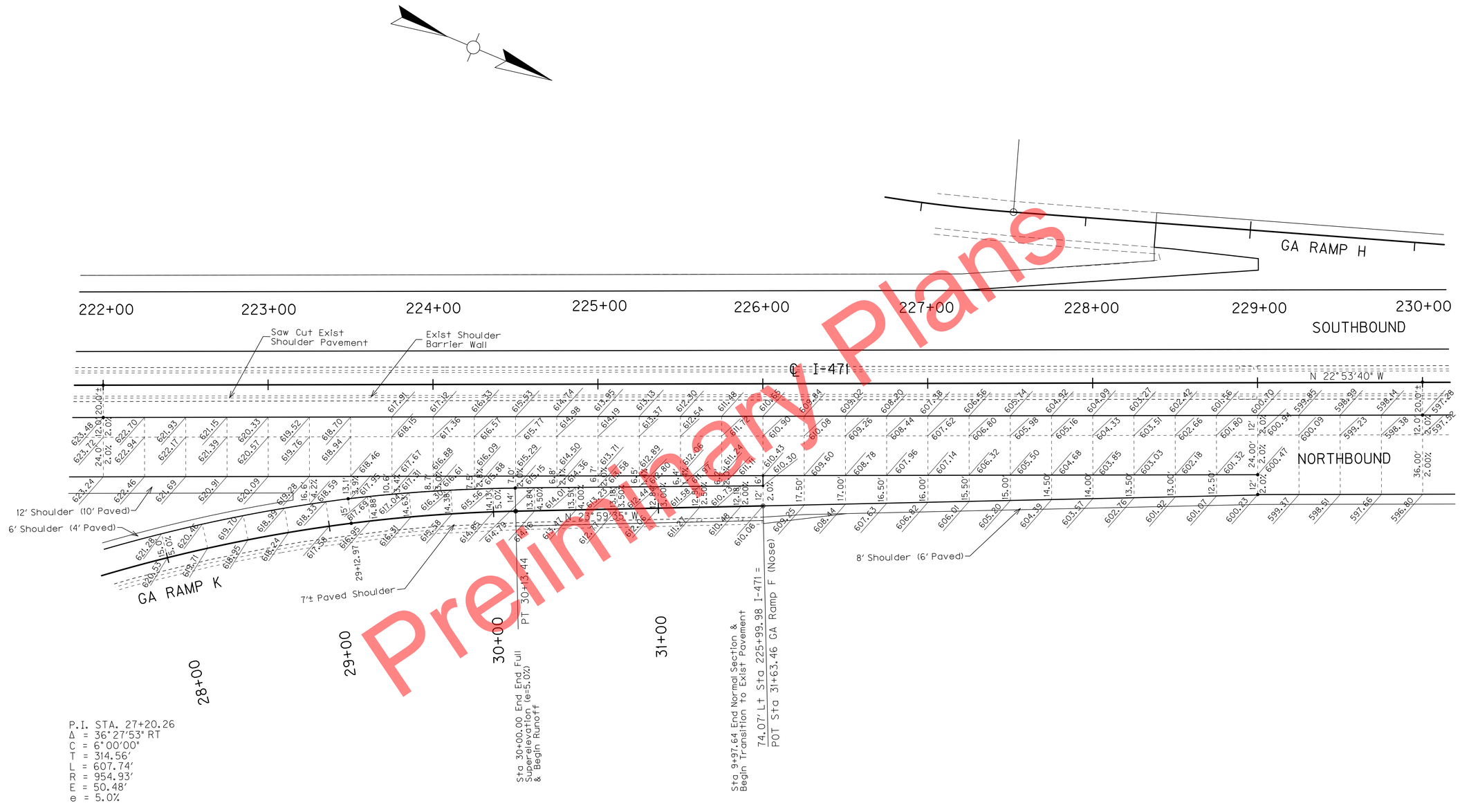

Preliminary Plans

I-471 (NORTHBOUND)
STA 222+00 TO STA 230+00

DEVELOPMENT SHEET
GA RAMP K
STA 28+00 TO STA 32+00

SCALE: 1"= 30'

MicroStation v8.11.7.443
E-SHEET NAME:
USER: tvonbehren
DATE PLOTTED: January 2, 2012
FILE NAME: P:\CIVIL\471\6-2021.00\CONTRACT PLANS AND PROPOSAL\CONTRACT PLAN SET\ROADWAY\R126GDS.DGN

COUNTY OF	ITEM NO.	SHEET NO.
CAMPBELL	6-2021.00	R127

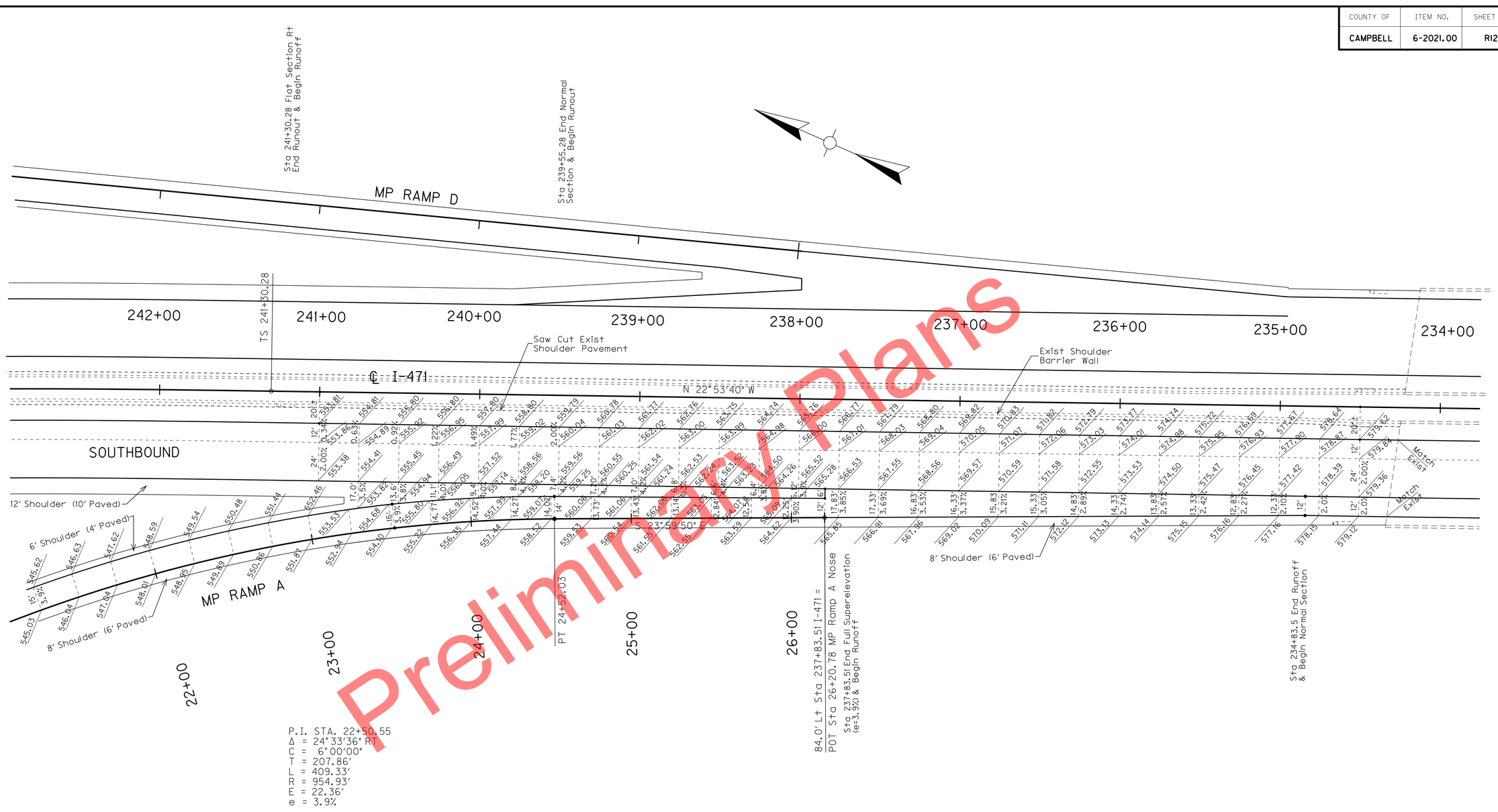

Preliminary Plans

I-471 (SB)
STA 234+00 TO STA 242+00

SCALE: 1"= 30'

DEVELOPMENT SHEET
MP RAMP A
STA 21+00 TO STA 26+00

MicroStation v8.11.7.443 | E-SHEET NAME: | USER: tvonbehren DATE PLOTTED: January 2, 2012 | FILE NAME: P:\CIVIL\471\N6-2021.00\CONTRACT PLANS AND PROPOSAL\CONTRACT PLAN SET\ROADWAY\R127000S.DGN

COUNTY OF	ITEM NO.	SHEET NO.
CAMPBELL	6-2021.00	R128

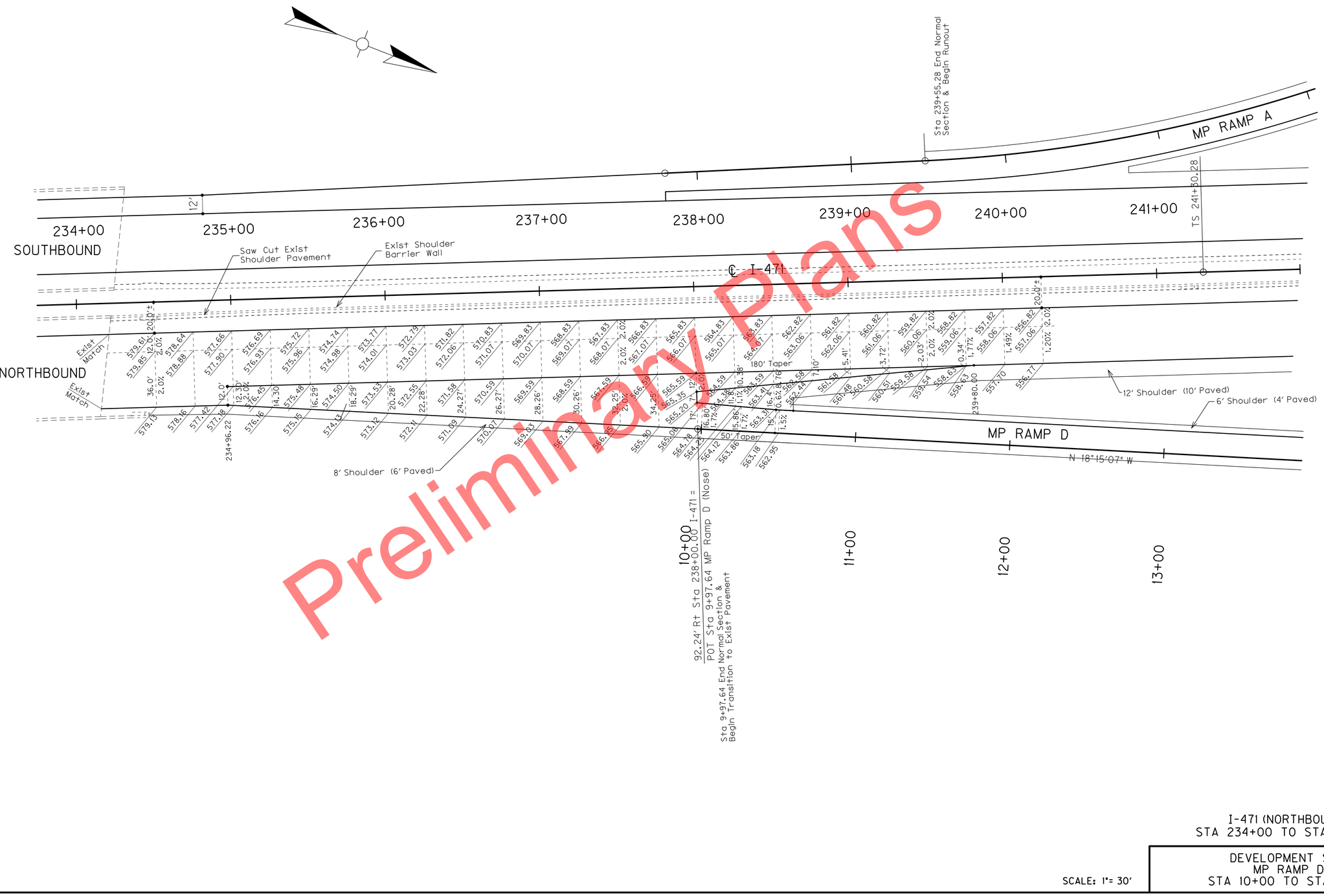

Preliminary Plans

I-471 (NORTHBOUND)
STA 234+00 TO STA 241+00

SCALE: 1"= 30'

DEVELOPMENT SHEET
MP RAMP D
STA 10+00 TO STA 13+00

MicroStation v8.11.7.443
E-SHEET NAME:
USER: tvonbehren
DATE PLOTTED: January 2, 2012
FILE NAME: P:\CIVIL\471\6-2021.00\CONTRACT PLANS AND PROPOSAL\CONTRACT PLAN SET\ROADWAY\R128000S.DGN

COUNTY OF	ITEM NO.	SHEET NO.
CAMPBELL	6-2021.00	R129

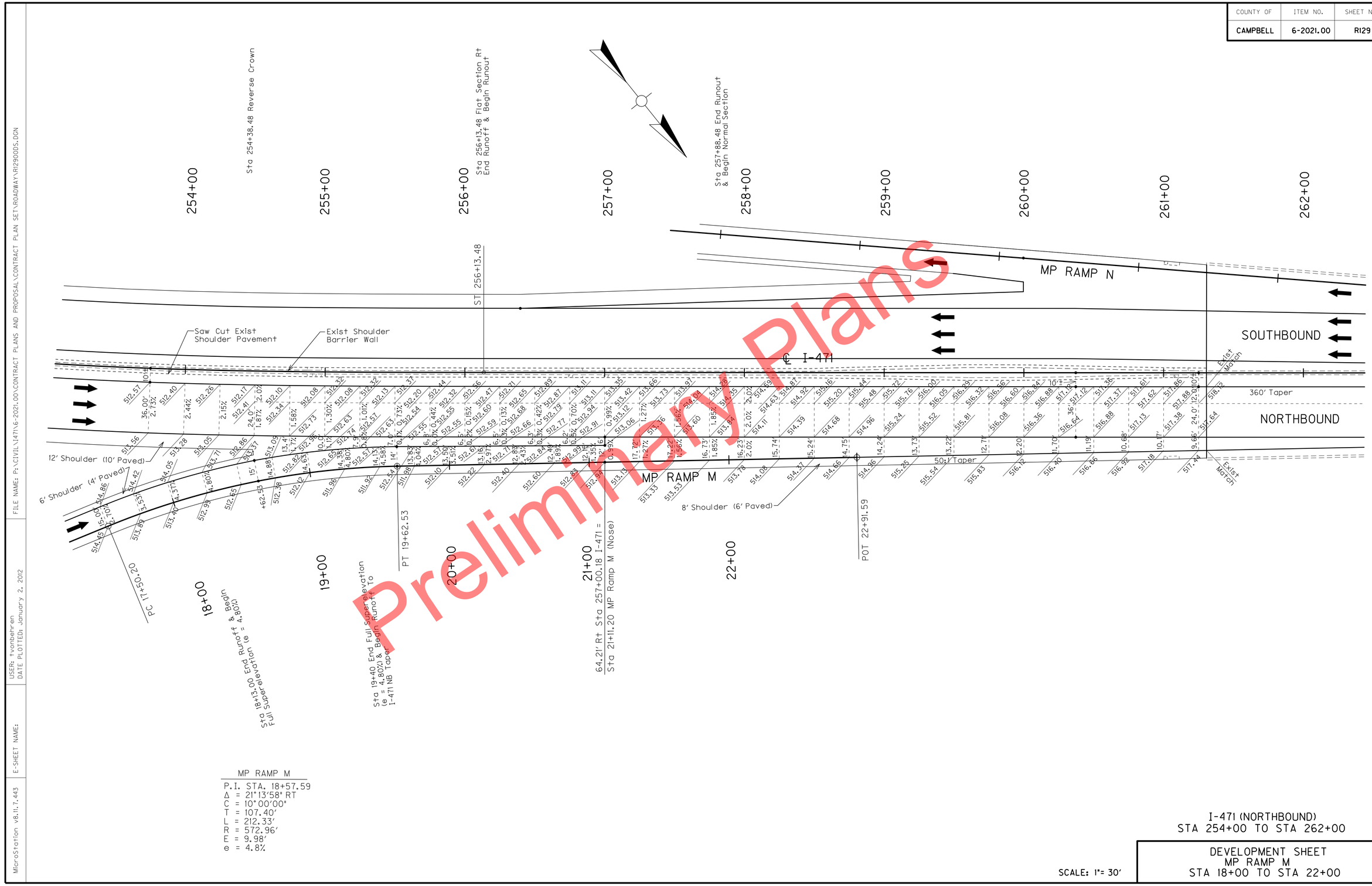

Preliminary

MP RAMP M

P.I. STA. 18+57.59
Δ = 21°13'58" RT
C = 10°00'00"
T = 107.40'
L = 212.33'
R = 572.96'
E = 9.98'
e = 4.8%

I-471 (NORTHBOUND)
STA 254+00 TO STA 262+00

SCALE: 1"= 30'

DEVELOPMENT SHEET
MP RAMP M
STA 18+00 TO STA 22+00

MicroStation v8.11.7.443 | E-SHEET NAME: | USER: tvonbehren | DATE PLOTTED: January 2, 2012 | FILE NAME: P:\CIVIL\471\N6-2021.00\CONTRACT PLANS AND PROPOSAL\CONTRACT PLAN SET\ROADWAY\R129000S.DGN

COUNTY OF	ITEM NO.	SHEET NO.
CAMPBELL	6-2021.00	R130

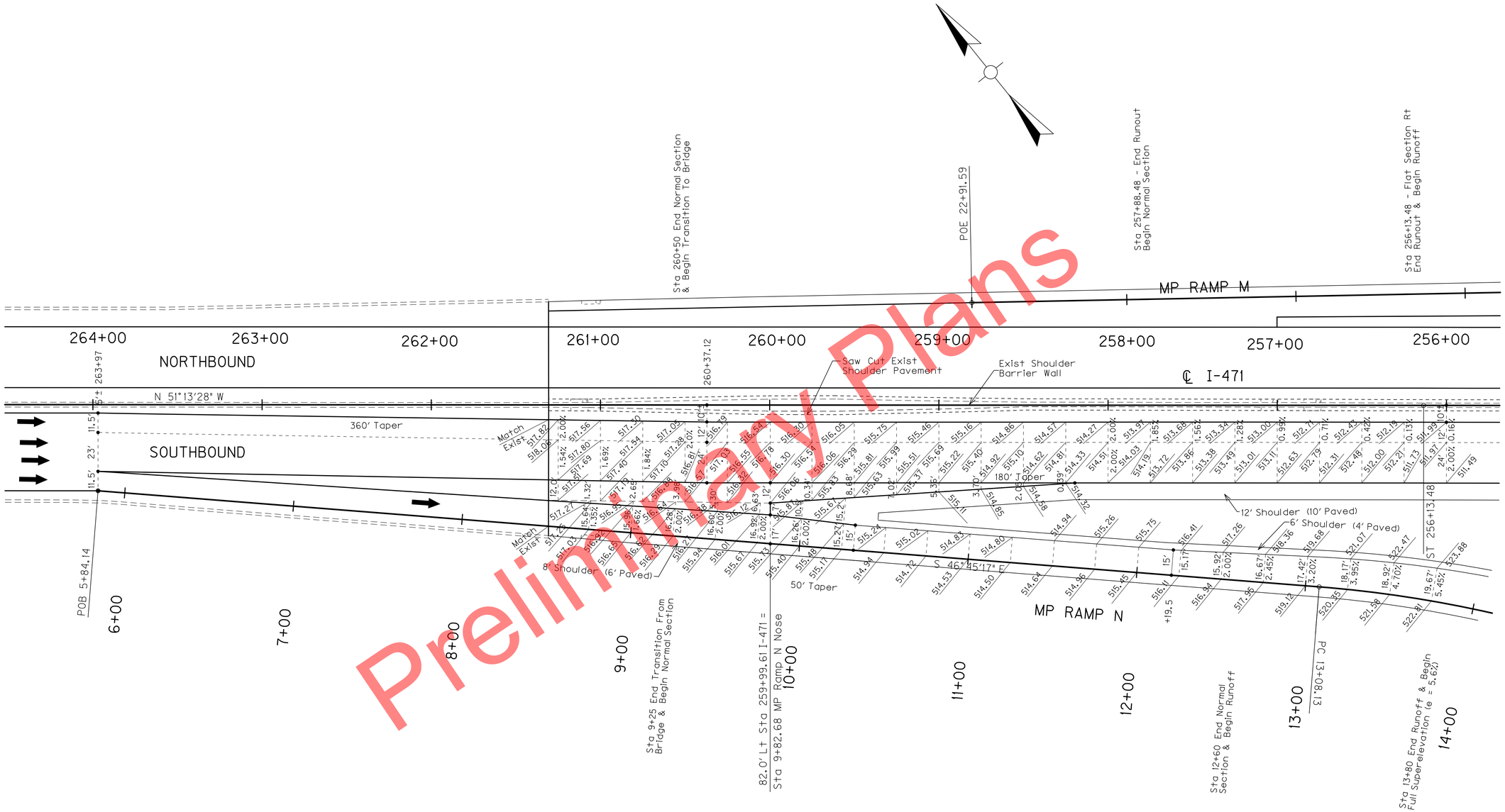

Preliminary Plans

MP RAMP N
P.I. STA. 14+30.53
Δ = 19°24'05" RT
D = 8°00'00"
T = 122.43'
L = 242.52'
R = 716.20'
E = 10.39'
e = 5.6%

I-471 (SOUTHBOUND)
STA 256+00 TO STA 264+00

SCALE: 1"= 30'

DEVELOPMENT SHEET
MP RAMP N
STA 6+00 TO STA 14+00

MicroStation v8.11.7.443
E-SHEET NAME:
USER: tvonbehren
DATE PLOTTED: January 2, 2012
FILE NAME: P:\CIVIL\471\6-2021.00\CONTRACT PLANS AND PROPOSAL\CONTRACT PLAN SET\ROADWAY\R130000S.DGN

COUNTY OF	ITEM NO.	SHEET NO.
CAMPBELL	6-2021.00	R131

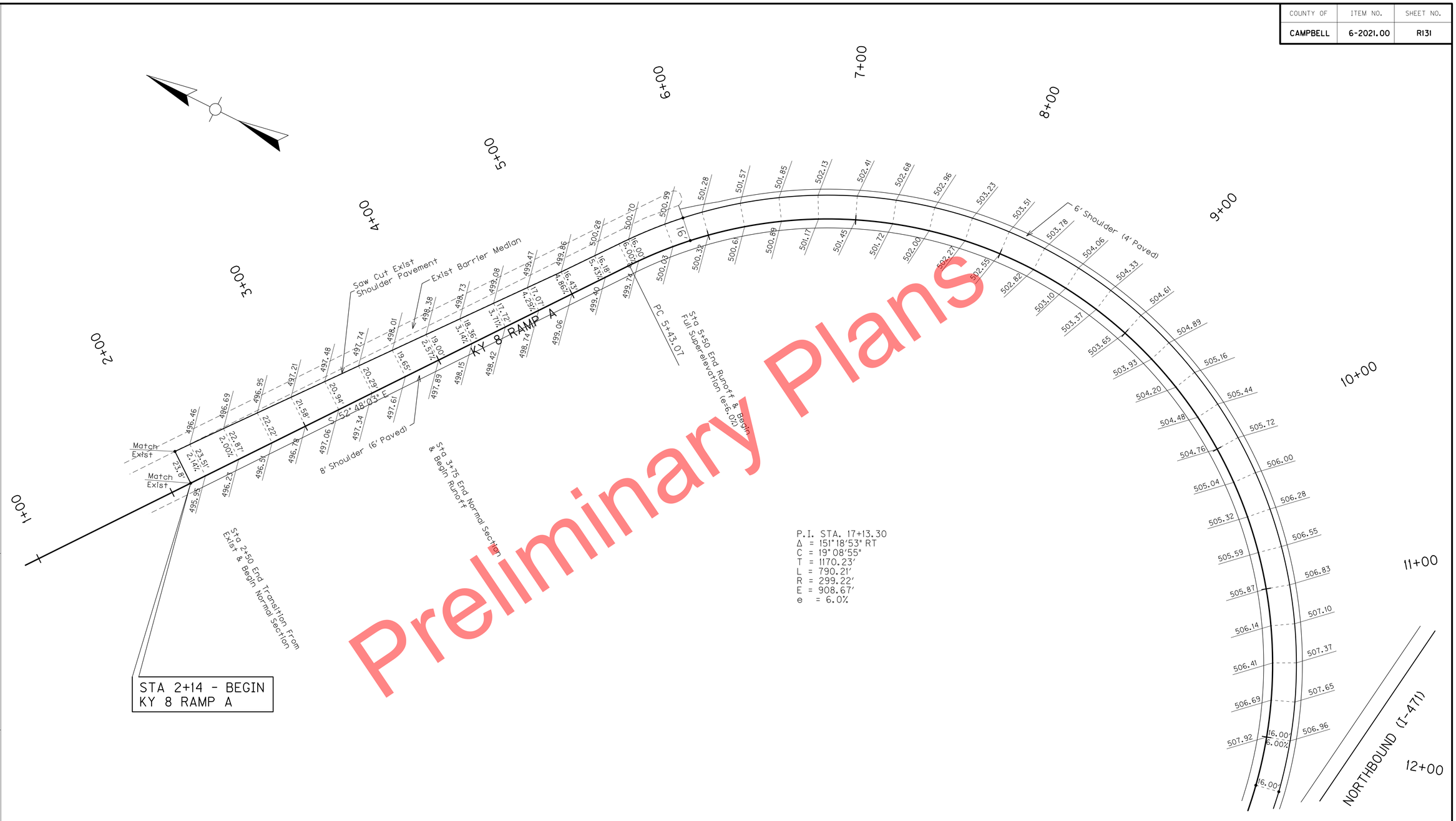

Preliminary Plans

SCALE: 1"= 30'

DEVELOPMENT SHEET
KY 8 RAMP A
STA 1+00 TO STA 12+00

MicroStation v8.11.7.443
E-SHEET NAME:
USER: tvonbehren
DATE PLOTTED: January 2, 2012
FILE NAME: P:\CIVIL\147\6-2021.00\CONTRACT PLANS AND PROPOSAL\CONTRACT PLAN SET\ROADWAY\R131000S.DGN

COUNTY OF	ITEM NO.	SHEET NO.
CAMPBELL	6-2021.00	R132

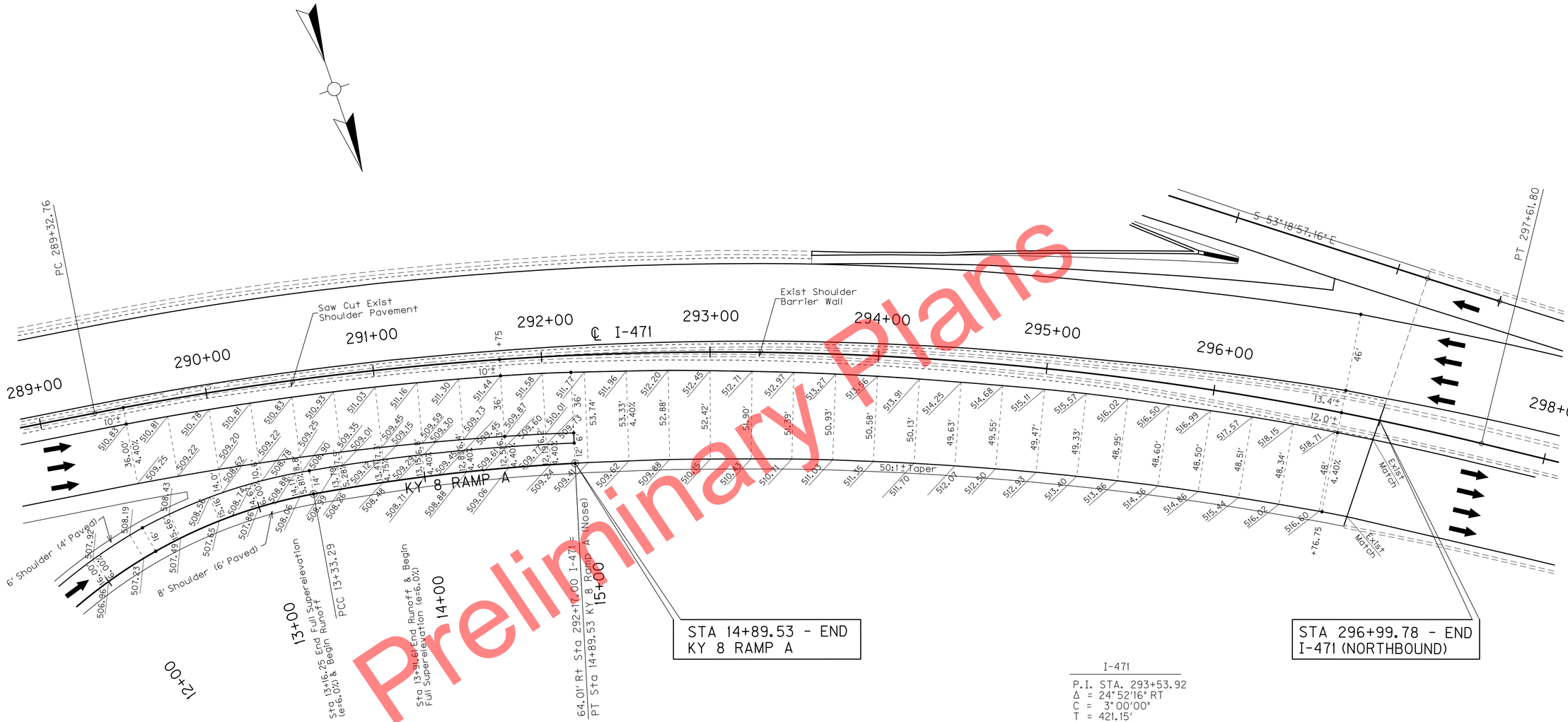

Preliminary Plans

KY 8 RAMP A

P.I. STA. 14+11.52
Δ = 7°23'46" RT
C = 4°44'01"
T = 78.23'
L = 156.24'
R = 299.22'
E = 2.53'
e = 4.4%

I-471

P.I. STA. 293+53.92
Δ = 24°52'16" RT
C = 3°00'00"
T = 421.15'
L = 829.04'
R = 1909.86'
E = 45.88'
e = 4.4%

I-471 (NORTHBOUND)
STA 289+00 TO STA 297+00

SCALE: 1"= 30'

DEVELOPMENT SHEET
KY 8 RAMP A
STA 12+00 TO STA 15+00

FILE NAME: P:\CIVIL\147\N6-2021.00\CONTRACT PLANS AND PROPOSAL\CONTRACT PLAN SET\ROADWAY\R13200DS.DGN
USER: tvonbehren
DATE PLOTTED: January 2, 2012
E-SHEET NAME:
MicroStation v8.11.7.443

COUNTY OF	ITEM NO.	SHEET NO.
CAMPBELL	6-2021.00	RI33

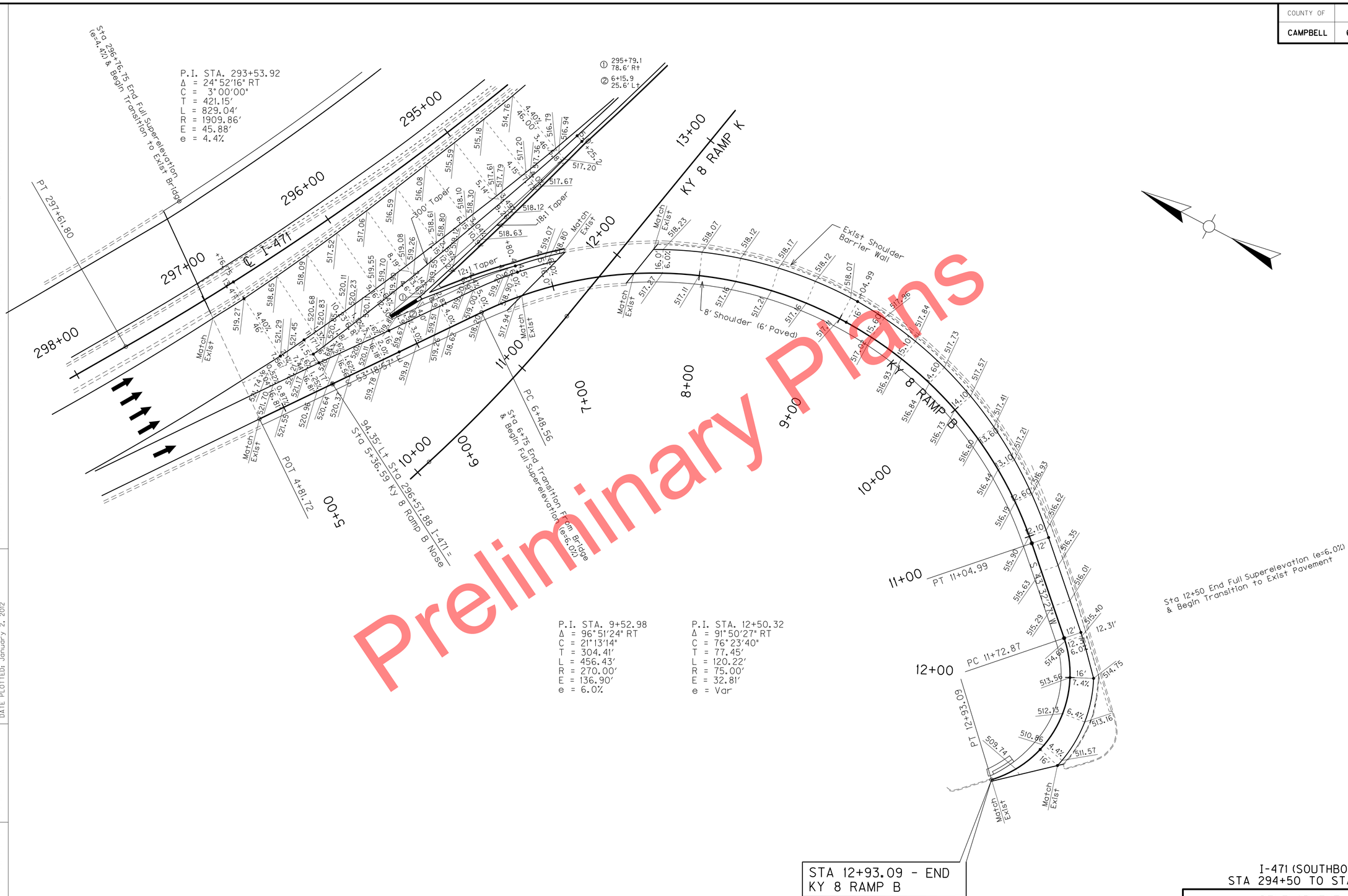

P.I. STA. 9+52.98
Δ = 96°51'24" RT
C = 21°13'14"
T = 304.41'
L = 456.43'
R = 270.00'
E = 136.90'
e = 6.0%

P.I. STA. 12+50.32
Δ = 91°50'27" RT
C = 76°23'40"
T = 77.45'
L = 120.22'
R = 75.00'
E = 32.81'
e = Var

Preliminary Plans

SCALE: 1"= 30'

I-471 (SOUTHBOUND)
STA 294+50 TO STA 298+00

DEVELOPMENT SHEET
KY 8 RAMP B
STA 4+00 TO STA 13+00

MicroStation v8.11.7.443
E-SHEET NAME:
USER: tvonbehren
DATE PLOTTED: January 2, 2012
FILE NAME: P:\CIVIL\147\N6-2021.00\CONTRACT PLANS AND PROPOSAL\CONTRACT PLAN SET\ROADWAY\RI33000S.DGN

COUNTY OF	ITEM NO.	SHEET NO.
CAMPBELL	6-2021.00	R134

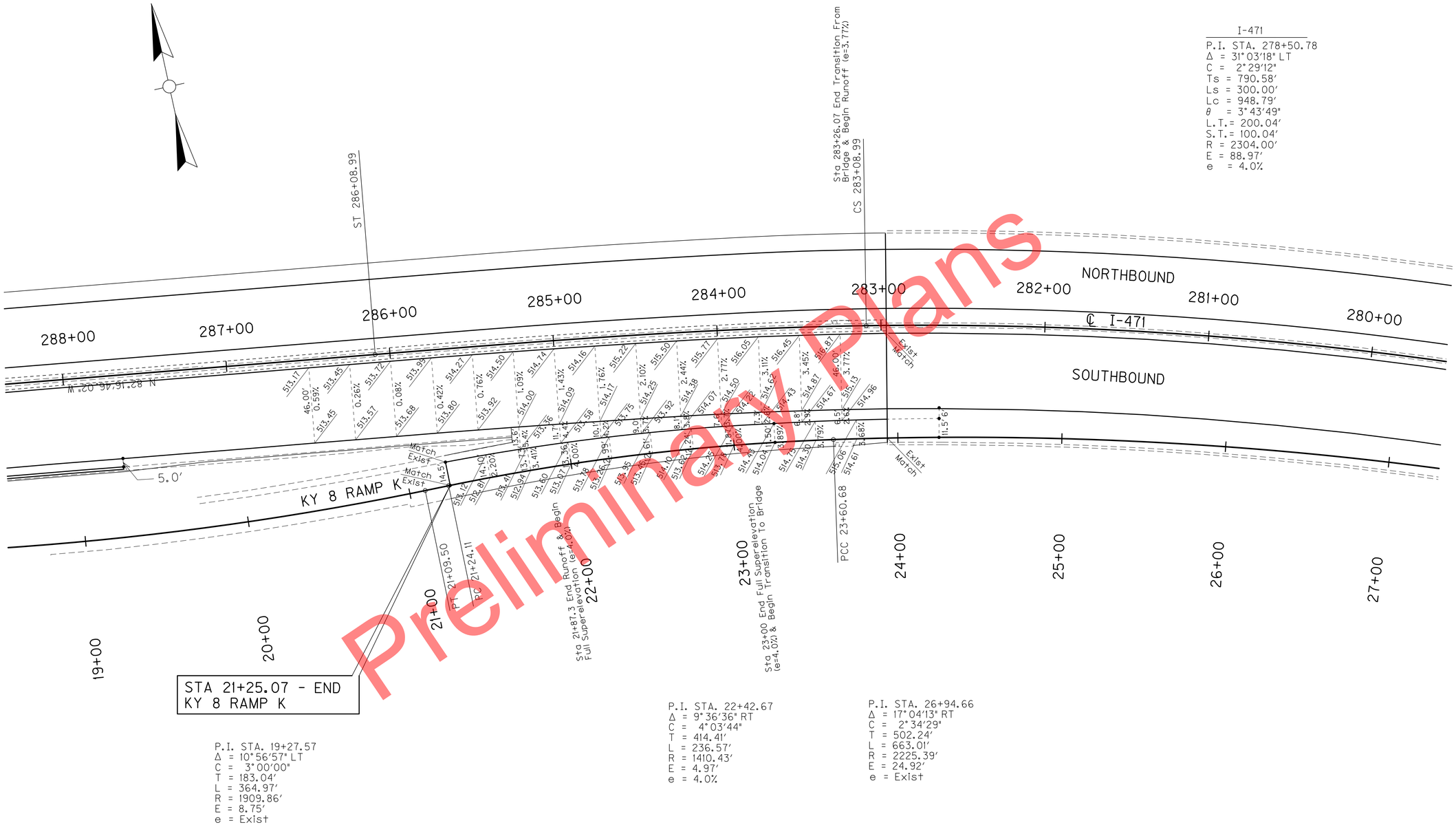

Preliminary Plans

I-471 (SOUTHBOUND
STA 280+00 TO STA 288+00

DEVELOPMENT SHEET
KY 8 RAMP K
STA 19+00 TO STA 27+00

SCALE: 1"= 30'

FILE NAME: P:\CIVIL\147IN6-2021.00\CONTRACT PLANS AND PROPOSAL\CONTRACT PLAN SET\ROADWAY\R134000S.DGN
USER: tvonbehren
DATE PLOTTED: January 2, 2012
E-SHEET NAME:
MicroStation v8.11.7.443

COUNTY OF	ITEM NO.	SHEET NO.
CAMPBELL	6-2021.00	R135

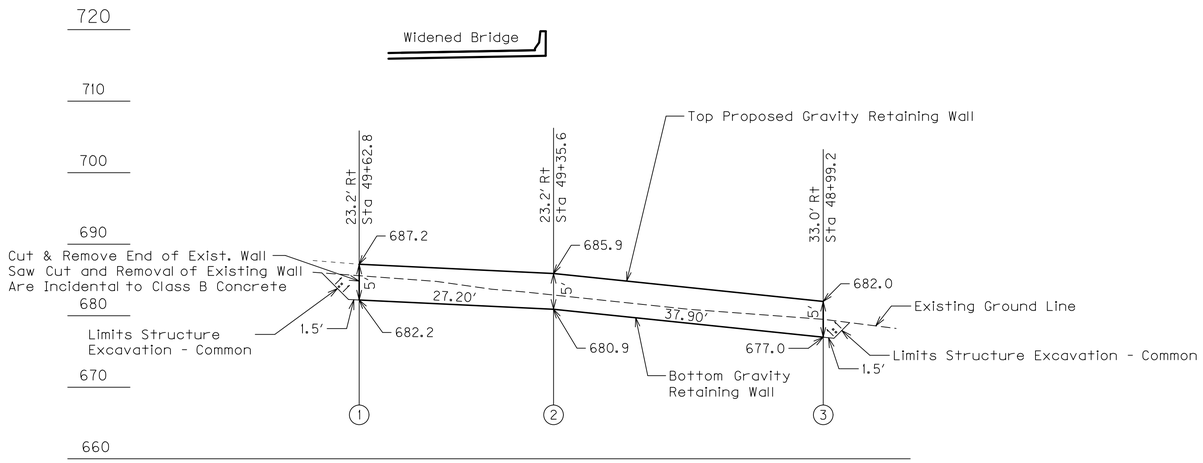

GRAVITY RETAINING WALL RT THREE MILE ROAD

ITEM NO. 2555 CONCRETE - CLASS B = 22 CY
ITEM NO. 8001 STRUCTURE EXCAVATION - COMMON = 53 CY

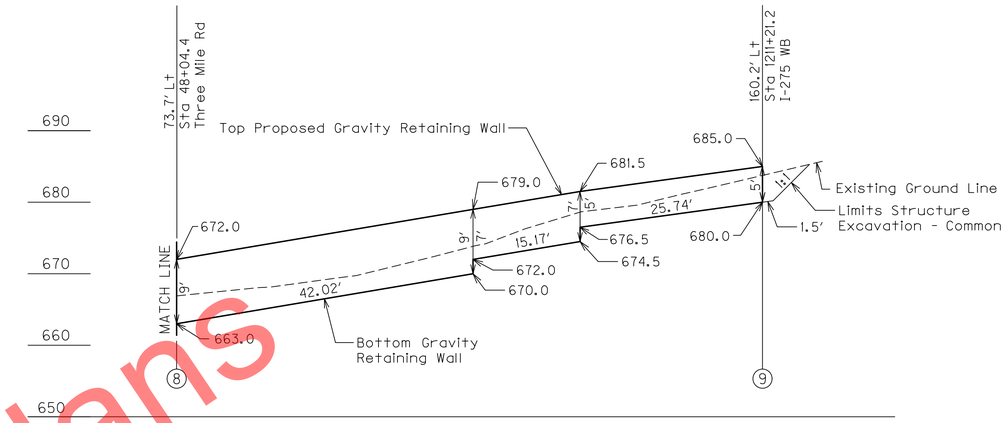

GRAVITY RETAINING WALL LT I-275 WB

ITEM NO. 2555 CONCRETE - CLASS B = 56 CY
ITEM NO. 8001 STRUCTURE EXCAVATION - COMMON = 99 CY

NOTES

SEE SHEET R100 FOR THE PLAN LAYOUT FOR THE GRAVITY RETAINING WALLS SHOWN ON THIS SHEET

THE QUANITIES SHOWN ON THIS SHEET HAVE BEEN CARRIED FORWARD TO THE GENERAL SUMMARY

SEE STANDARD DRAWING NO. RGX-002-08 FOR CONSTRUCTION DETAILS FOR THE GRAVITY TYPE RETAINING WALLS SHOWN ON THIS SHEET. USE CLASS III CONDITION VALUES.

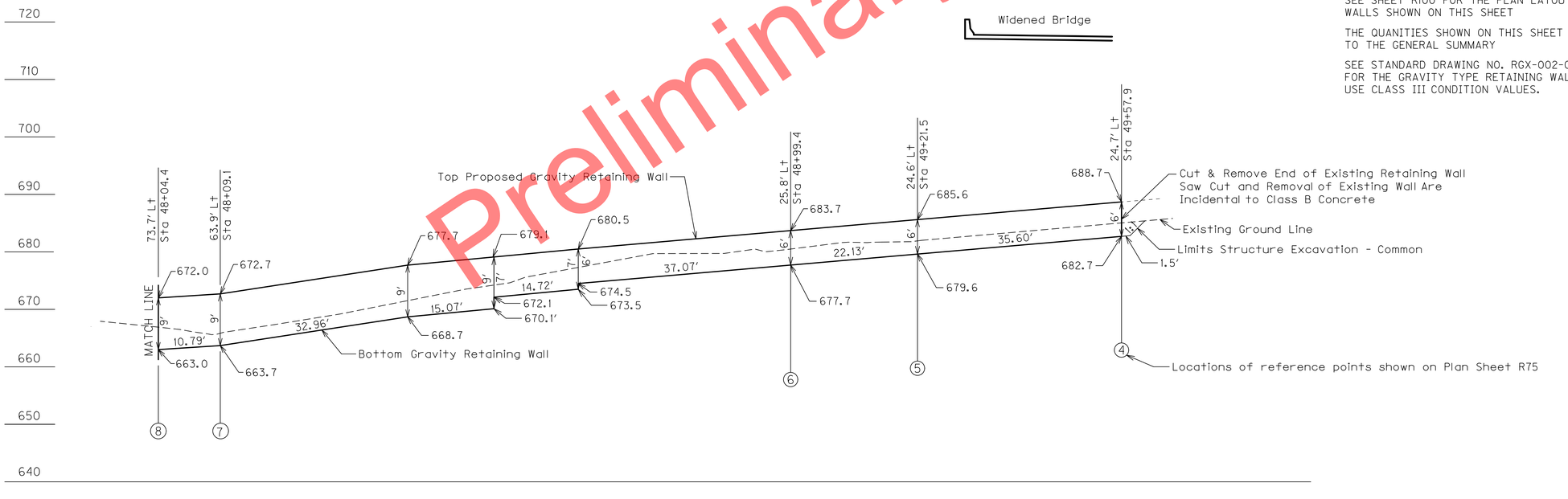

GRAVITY RETAINING WALL LT THREE MILE ROAD

ITEM NO. 2555 CONCRETE - CLASS B = 105 CY
ITEM NO. 8001 STRUCTURE EXCAVATION - COMMON = 166 CY

SCALE: 1" = 10'

GRAVITY RETAINING WALL DETAILS
THREE MILE ROAD
I-275 WB

Preliminary Plans

FILE NAME: P:\CIVIL\147N\6-2021.00\CONTRACT PLANS AND PROPOSAL\CONTRACT PLAN SET\ROADWAY\R13500DS.DGN
USER: tvonbehren
DATE PLOTTED: January 2, 2012
E-SHEET NAME:
MicroStation v8.11.7.443

COUNTY OF	ITEM NO.	SHEET NO.
CAMPBELL	6-2021.00	R136

SAW CUT TRANSITION AT EXISTING MEDIAN DRAINAGE BOX

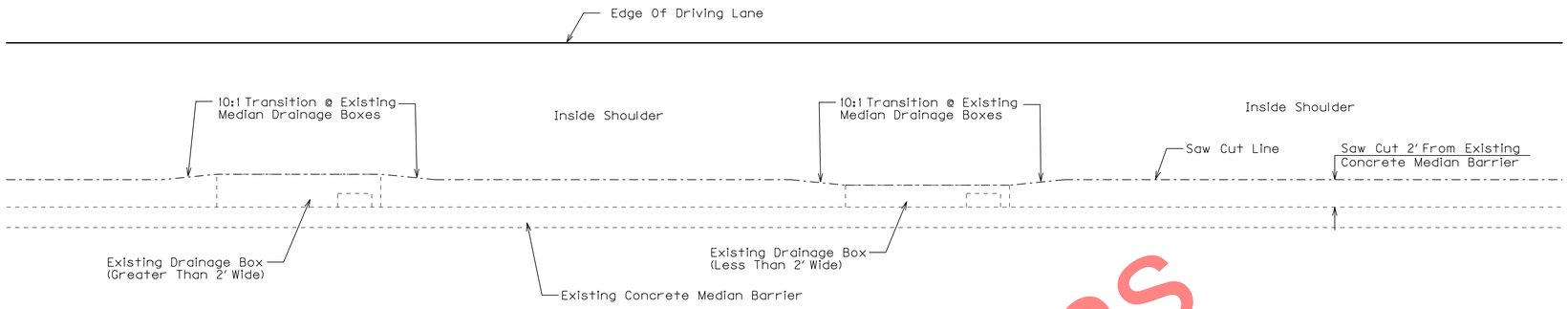

SAW CUT TO REMOVE CRACKS LESS THAN 2' FROM EXISTING CONCRETE MEDIAN BARRIER

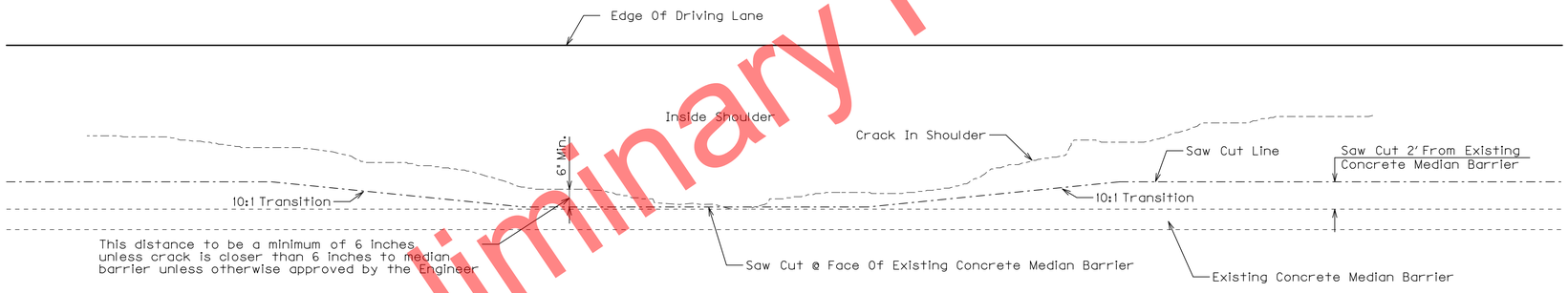

NOTE

See The Miscellaneous Pavement Summary Sheet for Estimated Additional Inside Shoulder Paving Areas For Removing Cracks In The Inside Shoulder Less than 2' From The Existing Median Barrier Wall. Locations To Be Approved By The Engineer. See Paving Summary For Each Pavement Alternate for Quantities.

CHANNEL LINING CLASS III - MOD

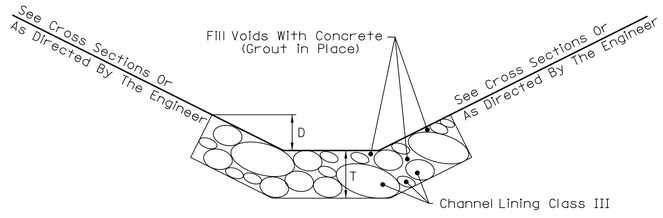

Preliminary Plans

SAW CUT DETAILS

CHANNEL LINING CLASS III - MOD

MicroStation v8.11.7.443
E-SHEET NAME:
USER: tvonbehren
DATE PLOTTED: January 2, 2012
FILE NAME: P:\CIVIL\147N6-2021.00\CONTRACT PLANS AND PROPOSAL\CONTRACT PLAN SET\ROADWAY\R136DDS.DGN

COUNTY OF	ITEM NO.	SHEET NO.
CAMPBELL	6-2021.00	R137

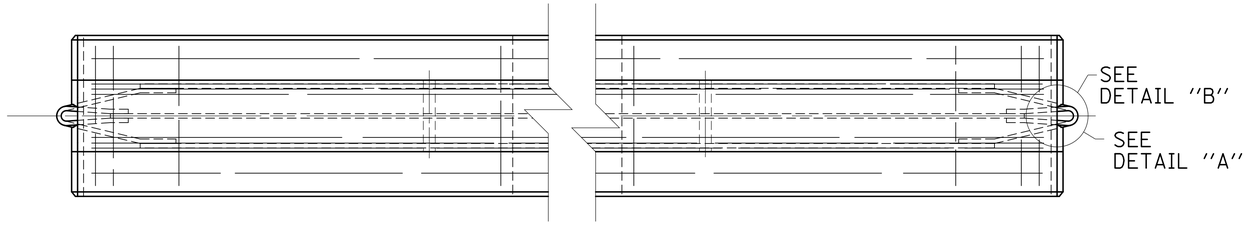

PLAN VIEW

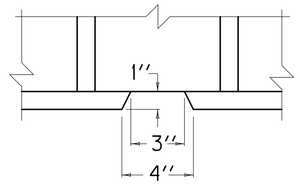

DETAIL "A"

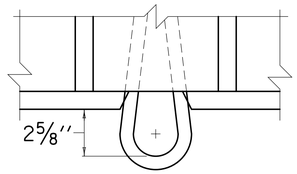

DETAIL "B"

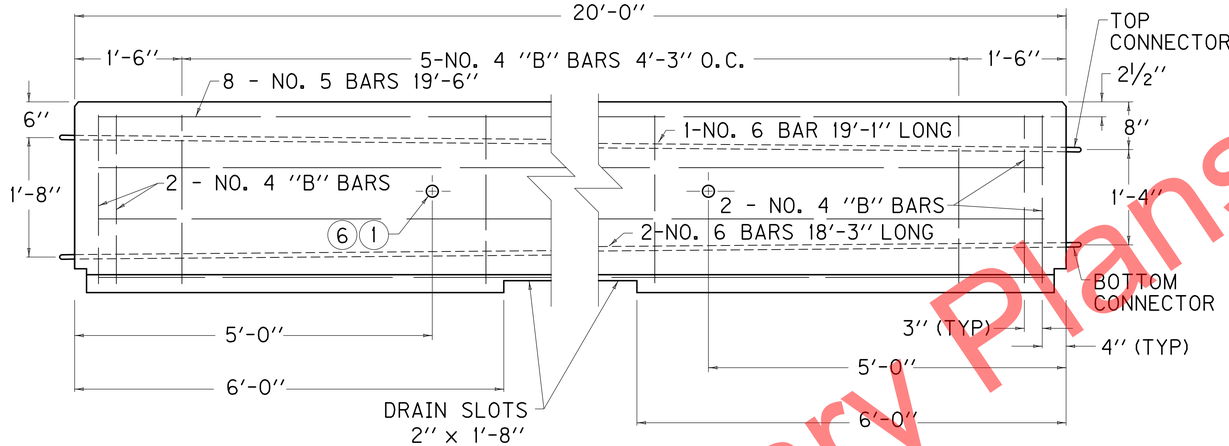

ELEVATION VIEW

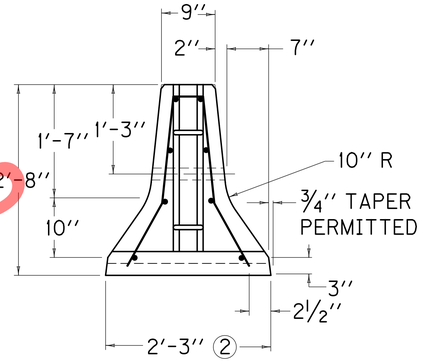

RIGHT ELEVATION VIEW

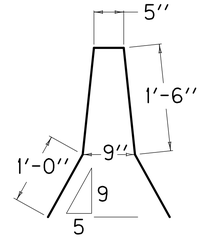

DETAIL OF "B" BAR

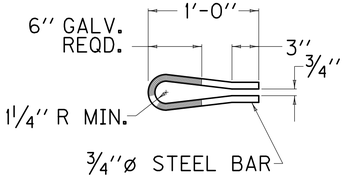

TOP CONNECTOR
(HOT DIP GALVANIZE AFTER FORMING)

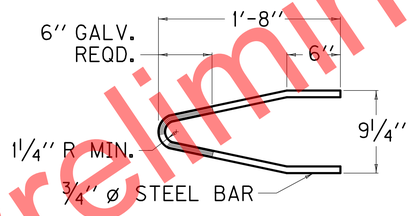

BOTTOM CONNECTOR
(HOT DIP GALVANIZE AFTER FORMING)

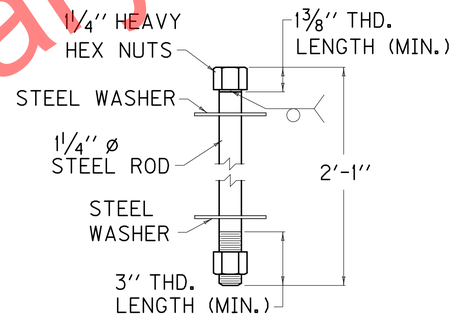

CONNECTOR PIN

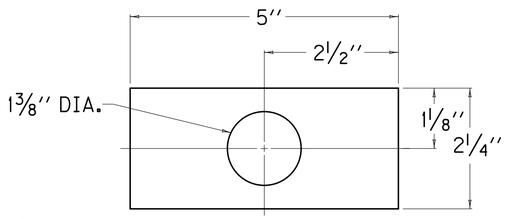

1/2" THICK STEEL WASHER

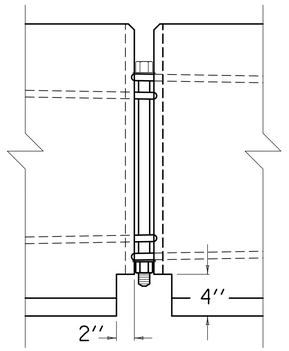

ELEVATION OF CONNECTON DETAIL

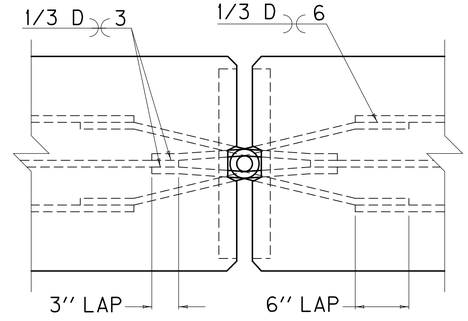

PLAN OF CONNECTION DETAIL

~ NOTES ~

BID ITEM AND UNIT TO BID:
CONC. BARRIER WALL TYPE 9T - LIN. FT.

(1) 2" DIA. LIFTING HOLE - 2 REQUIRED EACH SECTION. FORMED WITH 2" P.V.C. PIPE OR EQUAL.
(2) TAPER NOT INCLUDED IN BASE WIDTH.
3. SHOP DRAWINGS SHALL BE APPROVED PRIOR TO MANUFACTURE.
(4) BASED ON 150 LBS./CU. FT.
5. PLACE ALL STEEL REINFORCEMENT A CLEAR DISTANCE OF 2" MIN. FROM OUTSIDE FACE OF WALL, EXCEPT WHERE SHOWN OTHERWISE.
(6) LIFTING BARS SHALL BE REQUIRED TO PREVENT SPALLING OF CONCRETE AROUND HOLES.
7. PREVIOUS WALL MANUFACTURED ACCORDING TO STANDARD DRAWING RBM-115-07 MAY STILL BE USED. ANY NEW BARRIER WALL TYPE 9T MANUFACTURED SHALL COMPLY TO THIS STANDARD DRAWING.
8. A PERMISSABLE ALTERNATE FOR THE PIN AND LOOP CONNECTOR IS JJ HOOK MANUFACTURED BY EASI-SET INDUSTRIES OUT OF MIDLAND, VA. SEE MANUFACTURER'S SHOP DRAWINGS FOR DETAILS ON JJ HOOK CONNECTOR AND RECOMMENDED REINFORCEMENT. THE BARRIER WALL'S SHAPE, LENGTH, DRAIN SLOT DIMENSIONS AND LOCATIONS SHALL MATCH THIS DRAWINGS CURRENT DIMENSIONS. (1)(6)

APPROXIMATE QUANTITIES

20'		
REINF.	CONC.	WEIGHT (4)
LBS.	CU. YD./FT.	TONS
195	0.12	5.0

FOR TEMPORARY USE ONLY

KENTUCKY DEPARTMENT OF HIGHWAYS

CONCRETE BARRIER WALL TYPE 9T (TEMPORARY)

APPROVED _____ TEBM, DIVISION OF DESIGN — 04-15-08 DATE

004

Preliminary

MicroStation v8.11.7.443 E-SHEET NAME: USER: tvonbehren DATE PLOTTED: January 2, 2012 FILE NAME: P:\CIVIL\147\N6-2021.00\CONTRACT PLANS AND PROPOSAL\CONTRACT PLAN SET\ROADWAY\R137000S.DGN

COUNTY OF	ITEM NO.	SHEET NO.
CAMPBELL	6-2021.00	R138

NOTES

1. DELINEATOR SHALL BE MEASURED AND PAID FOR AT THE CONTRACT UNIT PRICE EACH, AND SHALL INCLUDE ALL MATERIALS AND LABOR NECESSARY FOR ONE COMPLETE INSTALLATION.
2.

CODE	PAY ITEM	PAY UNIT
1982	DELINEATOR FOR GUARDRAIL - WHITE	EACH
1983	DELINEATOR FOR GUARDRL - YELLOW	EACH

3. GUARDRAIL DELINEATORS SHALL BE REQUIRED ON ALL ROADWAYS WITH SHOULDERS 6'-0" IN WIDTH OR LESS AND AT OTHER LOCATIONS WHERE THE GUARDRAIL LEADS INTO HORIZONTAL CURVES OF LESS THAN 950 FEET RADIUS.
4. DELINEATORS SHALL BE MANUFACTURED FROM 12 GA. GALVANIZED STEEL.
5. DIMENSIONS SHOWN ARE APPROXIMATE AND ARE SUBJECT TO MANUFACTURES TOLERANCES.
6. WHEN CONCRETE BARRIERS EXTEND ACROSS BRIDGE STRUCTURES IN LIEU OF STEEL BEAM GUARDRAIL, DELINEATORS SHALL BE INSTALLED AT SAME VERTICAL ALIGNMENT AS ON THE GUARDRAIL AND DELINEATORS SHALL COMPLY WITH CURRENT STD. DWG. RBM-020.

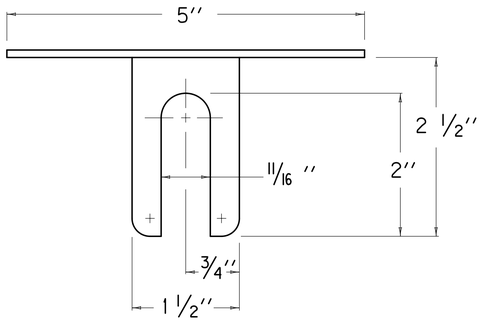

PLAN VIEW

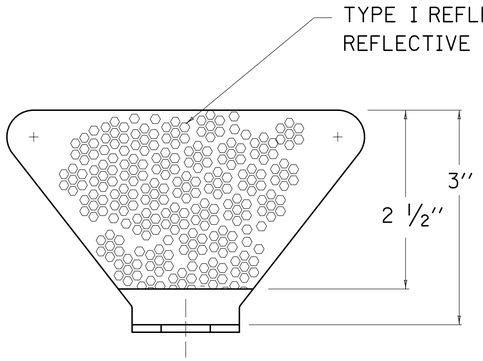

FRONT VIEW

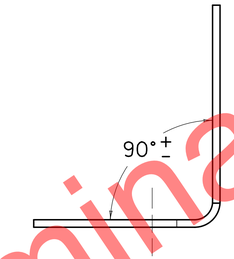

SIDE VIEW

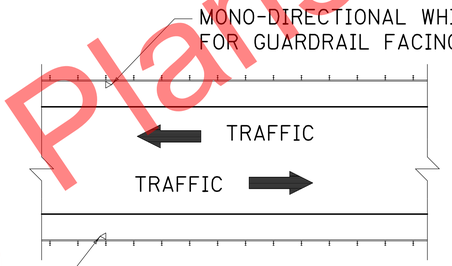

PLACEMENT OF DELINEATORS FOR GUARDRAIL

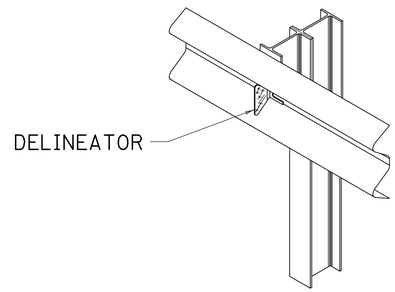

ISOMETRIC VIEW

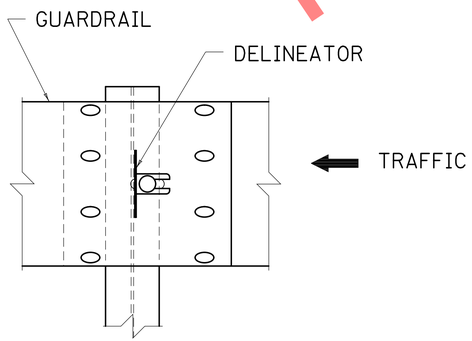

FRONT VIEW

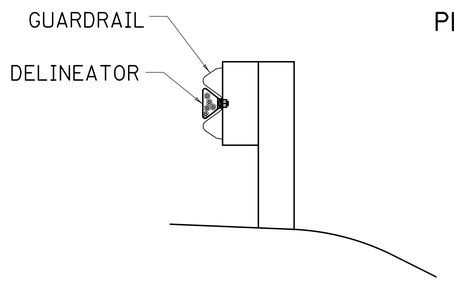

SIDE VIEW

DELINEATOR SPACINGS ON HORIZONTAL CURVES	
DEGREE OF CURVE	SPACING ON CURVES
$\leq 2^\circ$	100'
$> 2^\circ \leq 4^\circ$	75'
$> 4^\circ$	50'

SPACING ON TANGENTS = 100' INTERVALS

KENTUCKY DEPARTMENT OF HIGHWAYS

DELINEATORS FOR GUARDRAIL

SUBMITTED William S. Gulick ASS'T. DIRECTOR DIVISION OF DESIGN — 12-1-99 DATE

002

Preliminary Plans

MicroStation v8.11.7.443
E-SHEET NAME:
USER: tvonbehren
DATE PLOTTED: January 2, 2012
FILE NAME: P:\CIVIL\147\N6-2021.00\CONTRACT PLANS AND PROPOSAL\CONTRACT PLAN SET\ROADWAY\R138000S.DGN

COUNTY OF	ITEM NO.	SHEET NO.
CAMPBELL	6-2021.00	R139

I-471 PAVEMENT EDGE DRAIN DETAIL 1

FULL DEPTH PAVEMENT REPLACEMENT

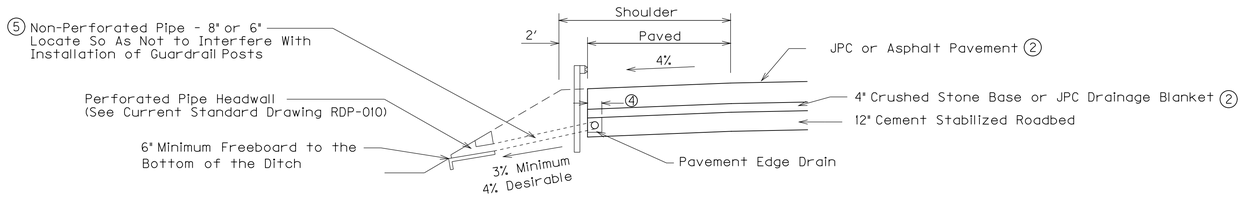

USE ON GRADES

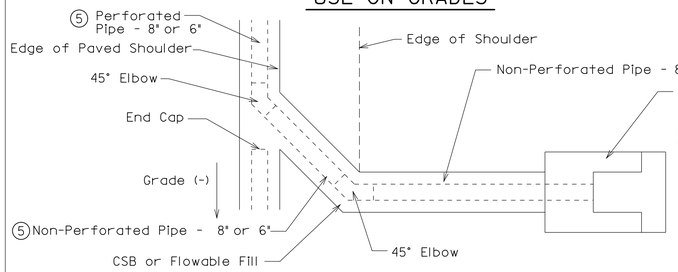

USE IN SAGS

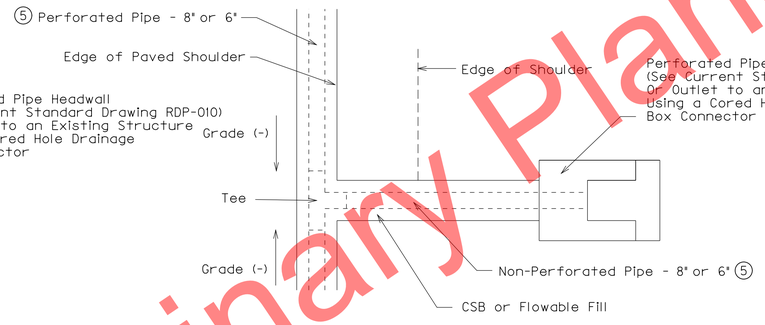

PERFORATED PIPE DRAIN TYPICAL

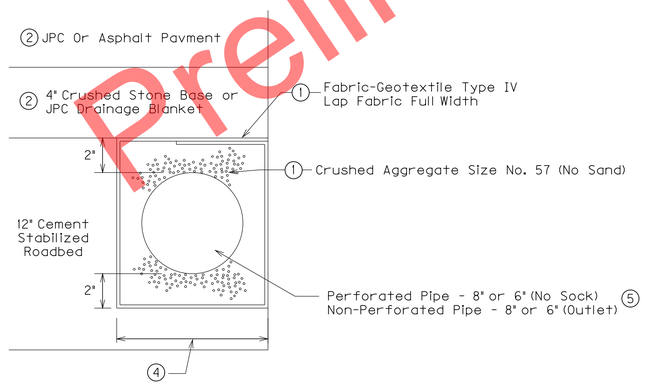

① These Items And All Other Cost Associated With Installing The Edge Drains, Including Excavating The Trench, Considered Incidental To The Perforated Pipe Bid Item

② See Typical Sections For Pavement And Base Types

③ Other Locations & Methods May Be Used With Approval Of The Engineer

④ 16" When Using 8" Perforated Pipe, 14" When Using 6" Perforated Pipe

⑤ See Perforated Pipe Summary for Locations of 8" and 6" Perforated And Non-Perforated Pipe

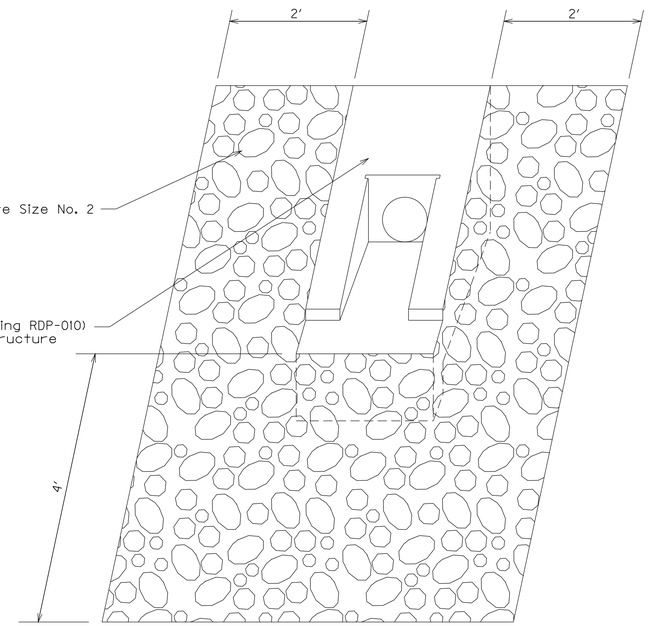

SPECIAL NOTE FOR PAVEMENT SUBSURFACE DRAINAGE OUTLET

A quantity of Crushed Aggregate Size No. 2 as defined in the current 'Kentucky Standard Specifications for Road and Bridge Construction' shall be used at all Perforated Pipe Headwall Outlets as illustrated in the detail above. Crushed Aggregate Size No. 2 shall be placed a minimum of 4 inches deep.

Dense Graded Aggregate (DGA) removed during placement of the Crushed Aggregate Size No. 2 shall be used to dress existing shoulders where DGA is exposed. Other materials removed during placement of the Crushed Aggregate No. 2 shall be wasted as directed by the Engineer. No direct payment will be allowed for disposal of wasted material.

The contract unit price for Crushed Aggregate Size No. 2 shall be full compensation for all materials, labor, and other incidentals necessary to place Crushed Aggregate Size No. 2 for control of vegetation and/or erosion control at pavement edge outlets.

See current Standard Drawing RDP-010 for dimensions and other details of perforated pipe headwalls.

Estimate one (1) Ton of Crushed Aggregate Size No. 2 for each Perforated Pipe Headwall Outlet.

Apply section 704, Underdrains, of the current edition of the Standard Specifications except use coarse aggregate for the backfill and partially wrap the aggregate with geotextile fabric as shown in the edge drain details. Apply section 214.03.04 of the current edition of the Standard Specifications except use Type IV fabric secured to the inside face of the trench with steel pins at intervals of 5 feet. Place the fabric on the sides and bottom of the trench with suitable equipment without stretching it. Place the filter aggregate in the trench without damaging , displacing, or dislodging the fabric. Fold tie fabric over the backfilled trench and secure it with steel pins at intervals of 5 feet.

Not To Scale

PAVEMENT EDGE DRAIN DETAIL 1

Preliminary Plans

MicroStation v8.11.7.443
E-SHEET NAME:
USER: tvonbehren
DATE PLOTTED: January 2, 2012
FILE NAME: P:\CIVIL\147\N6-2021.00\CONTRACT PLANS AND PROPOSAL\CONTRACT PLAN SET\ROADWAY\R139DDS.DGN

COUNTY OF	ITEM NO.	SHEET NO.
CAMPBELL	6-2021.00	R140

I-471 PAVEMENT EDGE DRAIN DETAIL 2

(FOR LOCATIONS USING 5' DEEP TRENCH) ⑥

FULL DEPTH PAVEMENT REPLACEMENT

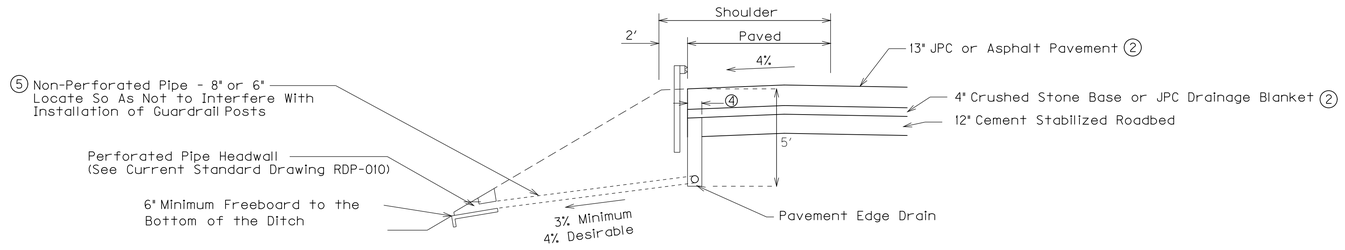

USE ON GRADES

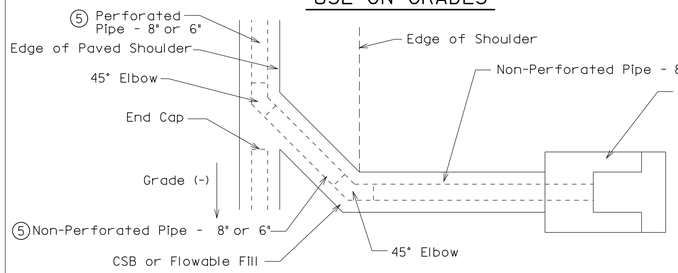

USE IN SAGS

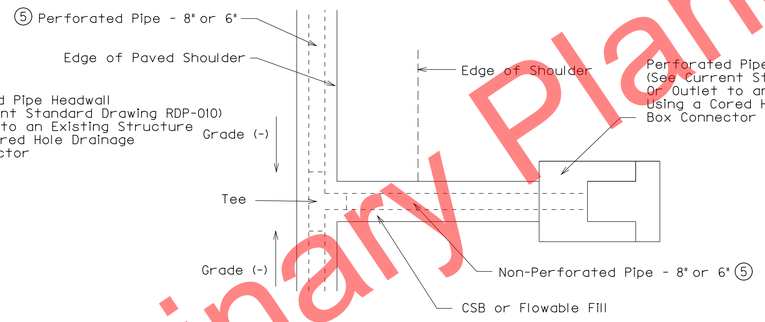

PERFORATED PIPE DRAIN TYPICAL

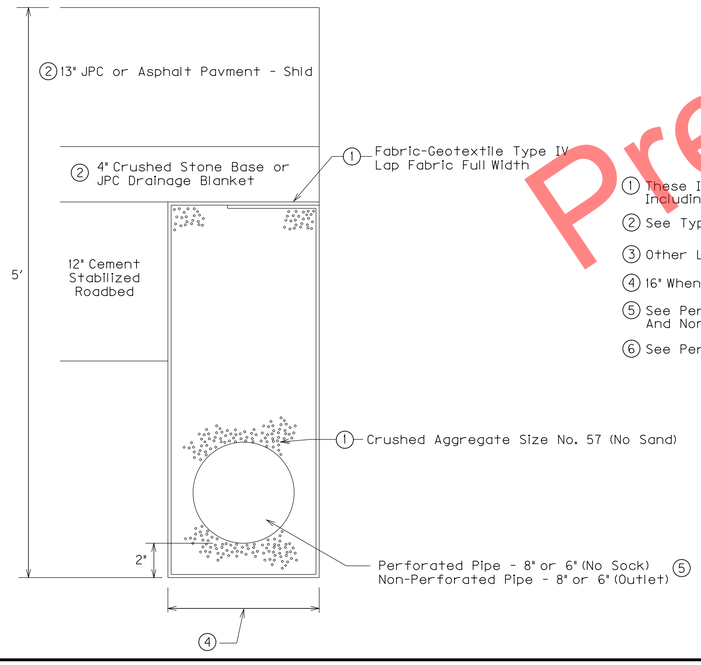

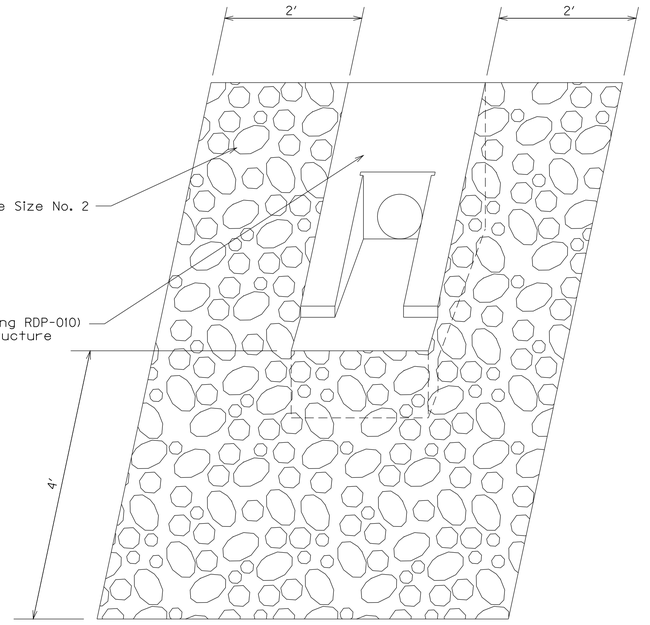

① These Items And All Other Cost Associated With Installing The Edge Drains, Including Excavating The Trench, Considered Incidental To The Perforated Pipe Bid Item

② See Typical Sections For Pavement And Base Types

③ Other Locations & Methods May Be Used With Approval Of The Engineer

④ 16" When Using 8" Perforated Pipe, 14" When Using 6" Perforated Pipe

⑤ See Perforated Pipe Summary for Locations of 8" and 6" Perforated And Non-Perforated Pipe

⑥ See Perforated Pipe Summary for Locations

SPECIAL NOTE FOR PAVEMENT SUBSURFACE DRAINAGE OUTLET

A quantity of Crushed Aggregate Size No. 2 as defined in the current 'Kentucky Standard Specifications for Road and Bridge Construction' shall be used at all Perforated Pipe Headwall Outlets as illustrated in the detail above. Crushed Aggregate Size No. 2 shall be placed a minimum of 4 inches deep.

Dense Graded Aggregate (DGA) removed during placement of the Crushed Aggregate Size No. 2 shall be used to dress existing shoulders where DGA is exposed. Other materials removed during placement of the Crushed Aggregate No. 2 shall be wasted as directed by the Engineer. No direct payment will be allowed for disposal of wasted material.

The contract unit price for Crushed Aggregate Size No. 2 shall be full compensation for all materials, labor, and other incidentals necessary to place Crushed Aggregate Size No. 2 for control of vegetation and/or erosion control at pavement edge outlets.

See current Standard Drawing RDP-010 for dimensions and other details of perforated pipe headwalls.

Estimate one (1) Ton of Crushed Aggregate Size No. 2 for each Perforated Pipe Headwall Outlet.

Apply section 704, Underdrains, of the current edition of the Standard Specifications except use coarse aggregate for the backfill and partially wrap the aggregate with geotextile fabric as shown in the edge drain details. Apply section 214.03.04 of the current edition of the Standard Specifications except use Type IV fabric secured to the inside face of the trench with steel pins at intervals of 5 feet. Place the fabric on the sides and bottom of the trench with suitable equipment without stretching it. Place the filter aggregate in the trench without damaging , displacing, or dislodging the fabric. Fold tie fabric over the backfilled trench and secure it with steel pins at intervals of 5 feet.

Preliminary Plans

Not To Scale

PAVEMENT EDGE DRAIN DETAIL 2

MicroStation v8.11.7.443
E-SHEET NAME:
USER: tvonbehren
DATE PLOTTED: January 2, 2012
FILE NAME: P:\CIVIL\147\N6-2021.00\CONTRACT PLANS AND PROPOSAL\CONTRACT PLAN SET\ROADWAY\R140000S.DGN

COUNTY OF	ITEM NO.	SHEET NO.
CAMPBELL	6-2021.00	R141

I-471 PAVEMENT EDGE DRAIN DETAIL 3

FULL DEPTH PAVEMENT REPLACEMENT

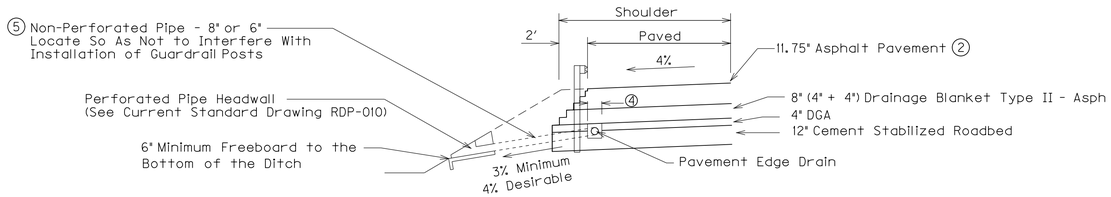

USE ON GRADES

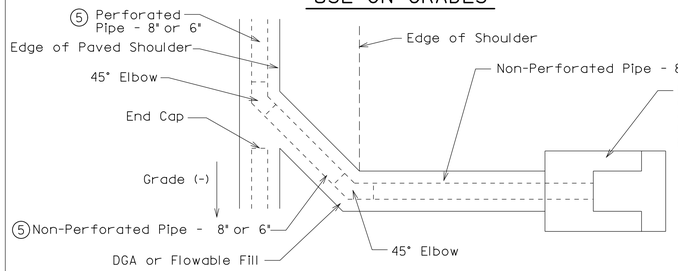

USE IN SAGS

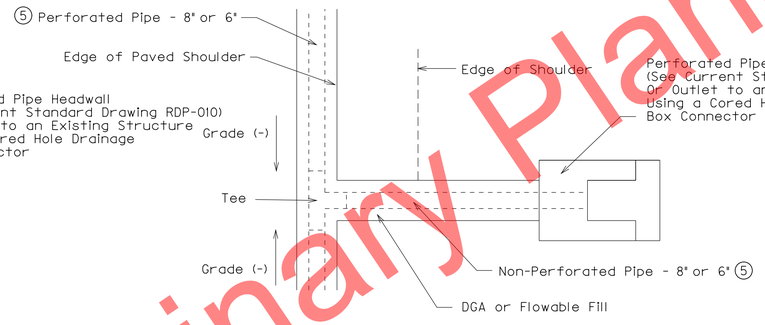

PERFORATED PIPE DRAIN TYPICAL

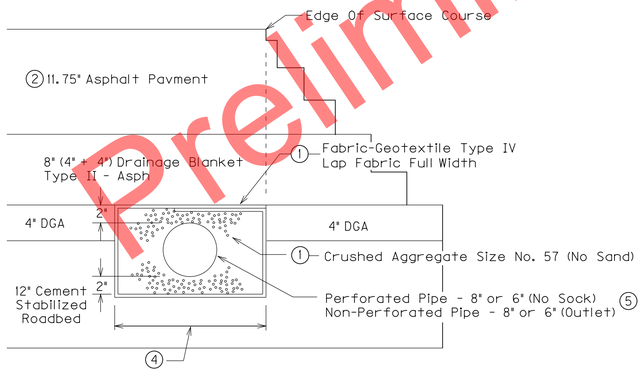

(1) These Items And All Other Cost Associated With Installing The Edge Drains, Including Excavating The Trench, Considered Incidental To The Perforated Pipe Bid Item

(2) See Typical Sections For Pavement And Base Types

(3) Other Locations & Methods May Be Used With Approval Of The Engineer

(4) 16" When Using 8" Perforated Pipe, 14" When Using 6" Perforated Pipe

(5) See Perforated Pipe Summary for Locations of 8" and 6" Perforated And Non-Perforated Pipe

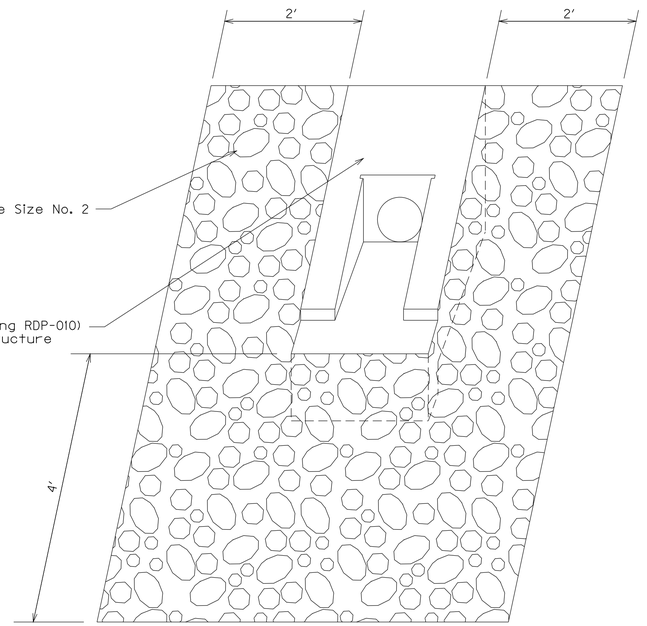

SPECIAL NOTE FOR PAVEMENT SUBSURFACE DRAINAGE OUTLET

A quantity of Crushed Aggregate Size No. 2 as defined in the current 'Kentucky Standard Specifications for Road and Bridge Construction' shall be used at all Perforated Pipe Headwall Outlets as illustrated in the detail above. Crushed Aggregate Size No. 2 shall be placed a minimum of 4 inches deep.

Dense Graded Aggregate (DGA) removed during placement of the Crushed Aggregate Size No. 2 shall be used to dress existing shoulders where DGA is exposed. Other materials removed during placement of the Crushed Aggregate No. 2 shall be wasted as directed by the Engineer. No direct payment will be allowed for disposal of wasted material.

The contract unit price for Crushed Aggregate Size No. 2 shall be full compensation for all materials, labor, and other incidentals necessary to place Crushed Aggregate Size No. 2 for control of vegetation and/or erosion control at pavement edge outlets.

See current Standard Drawing RDP-010 for dimensions and other details of perforated pipe headwalls.

Estimate one (1) Ton of Crushed Aggregate Size No. 2 for each Perforated Pipe Headwall Outlet.

Apply section 704, Underdrains, of the current edition of the Standard Specifications except use coarse aggregate for the backfill and partially wrap the aggregate with geotextile fabric as shown in the edge drain details. Apply section 214.03.04 of the current edition of the Standard Specifications except use Type IV fabric secured to the inside face of the trench with steel pins at intervals of 5 feet. Place the fabric on the sides and bottom of the trench with suitable equipment without stretching it. Place the filter aggregate in the trench without damaging , displacing, or dislodging the fabric. Fold tie fabric over the backfilled trench and secure it with steel pins at intervals of 5 feet.

Not To Scale

PAVEMENT EDGE DRAIN DETAIL 3

Preliminary Plans

MicroStation v8.11.7.443
E-SHEET NAME:
USER: tvonbehren
DATE PLOTTED: January 2, 2012
FILE NAME: P:\CIVIL\147\N6-2021.00\CONTRACT PLANS AND PROPOSAL\CONTRACT PLAN SET\ROADWAY\R141ODS.DGN

COUNTY OF	ITEM NO.	SHEET NO.
CAMPBELL	6-2021.00	R142

I-471 PAVEMENT EDGE DRAIN DETAIL 4

(FOR LOCATIONS USING 5' DEEP TRENCH) ⑥

FULL DEPTH PAVEMENT REPLACEMENT

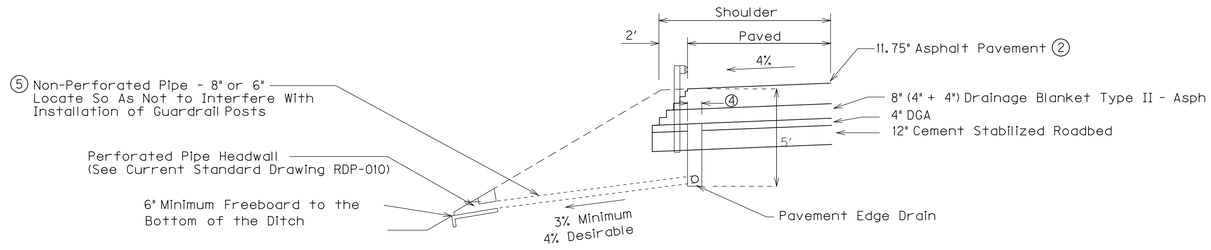

USE ON GRADES

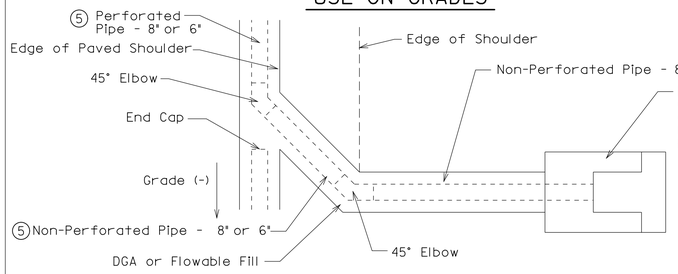

USE IN SAGS

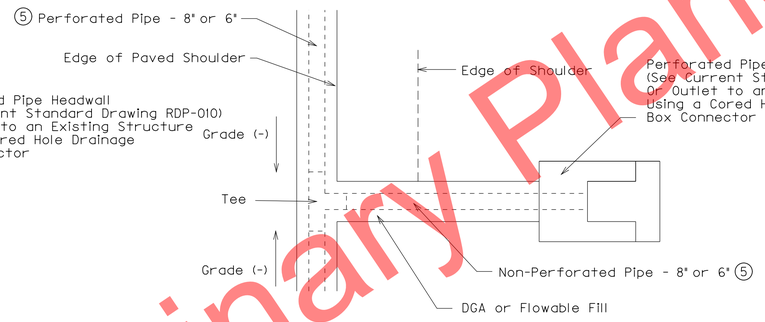

PERFORATED PIPE DRAIN TYPICAL

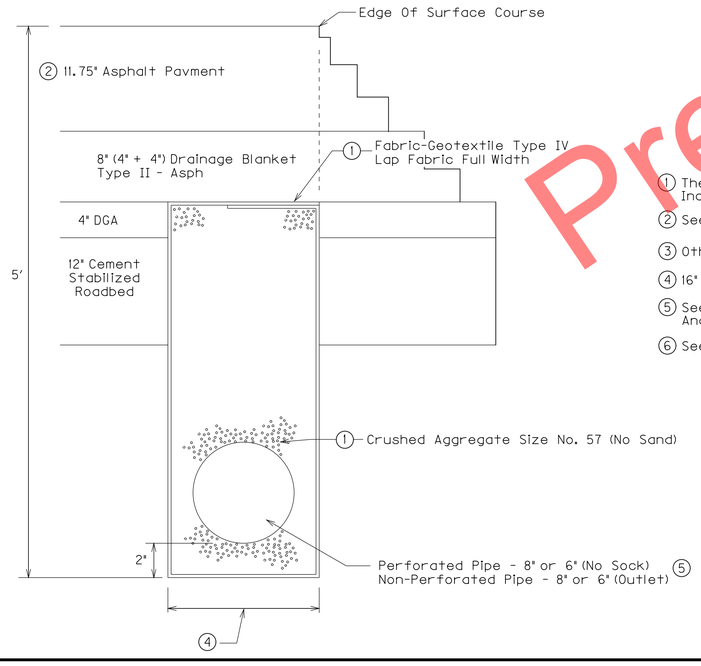

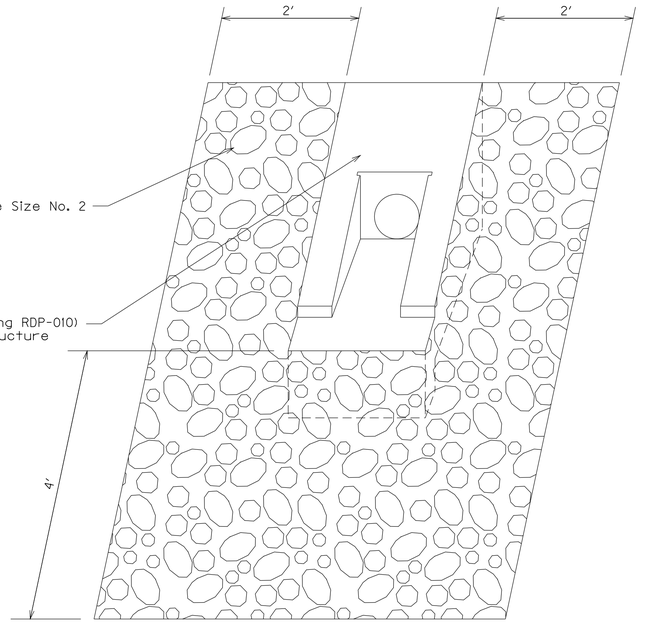

① These Items And All Other Cost Associated With Installing The Edge Drains, Including Excavating The Trench, Considered Incidental To The Perforated Pipe Bid Item

② See Typical Sections For Pavement And Base Types

③ Other Locations & Methods May Be Used With Approval Of The Engineer

④ 16" When Using 8" Perforated Pipe, 14" When Using 6" Perforated Pipe

⑤ See Perforated Pipe Summary for Locations of 8" and 6" Perforated And Non-Perforated Pipe

⑥ See Perforated Pipe Summary for Locations

SPECIAL NOTE FOR PAVEMENT SUBSURFACE DRAINAGE OUTLET

A quantity of Crushed Aggregate Size No. 2 as defined in the current 'Kentucky Standard Specifications for Road and Bridge Construction' shall be used at all Perforated Pipe Headwall Outlets as illustrated in the detail above. Crushed Aggregate Size No. 2 shall be placed a minimum of 4 inches deep.

Dense Graded Aggregate (DGA) removed during placement of the Crushed Aggregate Size No. 2 shall be used to dress existing shoulders where DGA is exposed. Other materials removed during placement of the Crushed Aggregate No. 2 shall be wasted as directed by the Engineer. No direct payment will be allowed for disposal of wasted material.

The contract unit price for Crushed Aggregate Size No. 2 shall be full compensation for all materials, labor, and other incidentals necessary to place Crushed Aggregate Size No. 2 for control of vegetation and/or erosion control at pavement edge outlets.

See current Standard Drawing RDP-010 for dimensions and other details of perforated pipe headwalls.

Estimate one (1) Ton of Crushed Aggregate Size No. 2 for each Perforated Pipe Headwall Outlet.

Apply section 704, Underdrains, of the current edition of the Standard Specifications except use coarse aggregate for the backfill and partially wrap the aggregate with geotextile fabric as shown in the edge drain details. Apply section 214.03.04 of the current edition of the Standard Specifications except use Type IV fabric secured to the inside face of the trench with steel pins at intervals of 5 feet. Place the fabric on the sides and bottom of the trench with suitable equipment without stretching it. Place the filter aggregate in the trench without damaging , displacing, or dislodging the fabric. Fold tie fabric over the backfilled trench and secure it with steel pins at intervals of 5 feet.

Not To Scale

PAVEMENT EDGE DRAIN DETAIL 4

Preliminary Plans

FILE NAME: P:\CIVIL\147\N6-2021.00\CONTRACT PLANS AND PROPOSAL\CONTRACT PLAN SET\ROADWAY\R142ODS.DGN
USER: tvonbehren
DATE PLOTTED: January 2, 2012
E-SHEET NAME:
MicroStation v8.11.7.443

COUNTY OF	ITEM NO.	SHEET NO.
CAMPBELL	6-2021.00	RI43

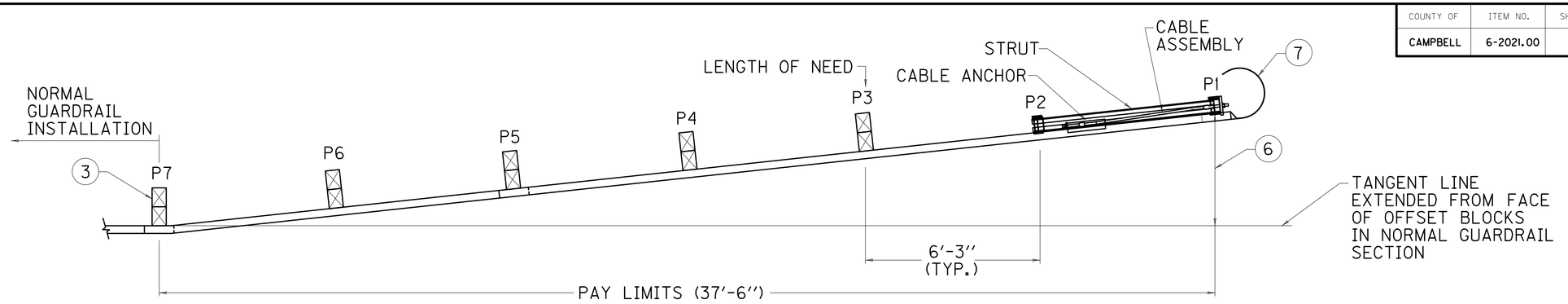

PLAN VIEW

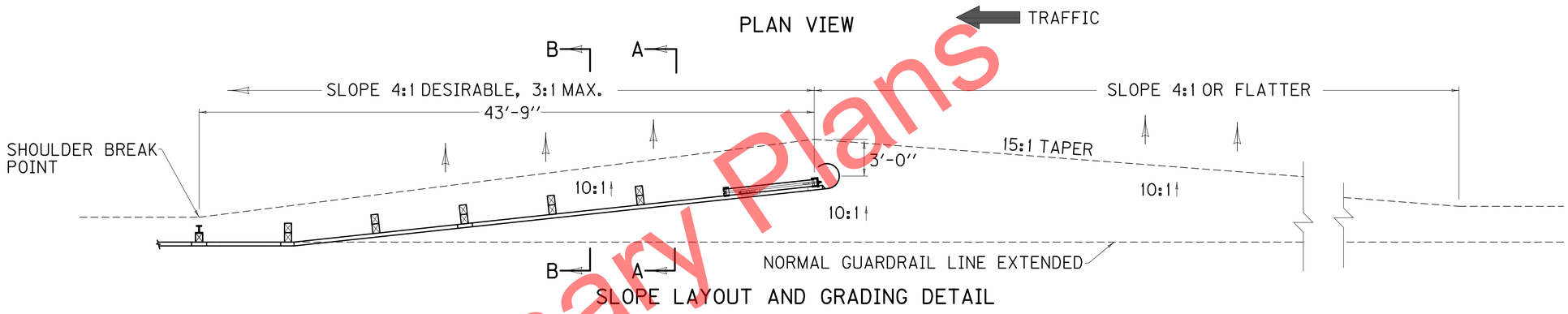

SLOPE LAYOUT AND GRADING DETAIL

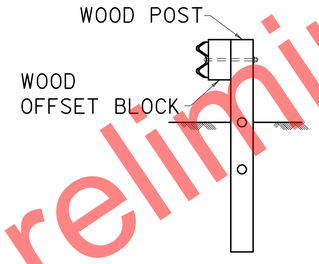

SECTION B-B
(POSTS P3 THRU P7)

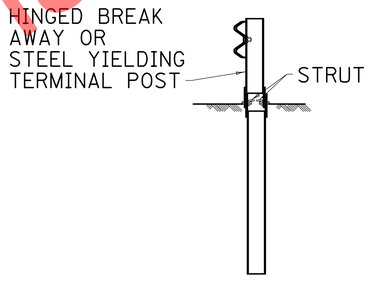

SECTION A-A
(POST P2)

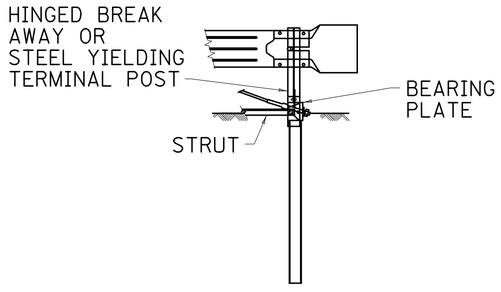

ENLARGED VIEW P1

1. BID ITEMS AND UNIT TO BID:
   A. GUARDRAIL END TREATMENT TYPE 4A - EACH
   B. MATERIAL USED TO CONSTRUCT WIDENING SHALL BE BID AS ROADWAY OR BORROW EXCAVATION OR EMBANKMENT-IN-PLACE AT THE CONTRACT UNIT PRICE PER CUBIC YARD.
2. INTENDED USE: AREAS WITH ADEQUATE VEHICLE RECOVERY ZONE BEHIND GUARDRAIL.
3. POST P7 SHALL BE A CRT BREAKAWAY WOOD POST.
4. GUARDRAIL END TREATMENT TYPE 4A IS A PATENTED (ONE SOURCE) PRODUCT MANUFACTURED BY TRINITY INDUSTRIES, INC. OF DALLAS, TX. OR ROAD SYSTEMS, INC. OF BIG SPRING, TX.
5. THE MANUFACTURER SHALL FURNISH TWO (2) SETS OF SHOP PLANS TO THE CONTRACTOR WITH EACH INSTALLATION.
6. SYSTEM OFFSET OF 4'-0" SHALL BE MEASURED FROM FACE OF OFFSET BLOCK AT NORMAL GUARDRAIL SECTION TO FACE OF POST AT P1.
7. OBJECT MARKER TYPE 3 (SEE CURRENT MUTCD MANUAL FOR DETAILS).

Preliminary Plans

KENTUCKY
DEPARTMENT OF HIGHWAYS

GUARDRAIL END TREATMENT TYPE 4A

APPROVED _____ DIRECTOR, DIVISION OF DESIGN 03-13-09 DATE

020

MicroStation v8.11.7.443
E-SHEET NAME:
USER: tvonbehren
DATE PLOTTED: January 2, 2012
FILE NAME: P:\CIVIL\147IN6-2021.00\CONTRACT PLANS AND PROPOSAL\CONTRACT PLAN SET\ROADWAY\RI43000S.DGN

COUNTY OF	ITEM NO.	SHEET NO.
CAMPBELL	6-2021.00	R144

PIPE DIA. (IN)	PIPE TYPE	CIRCULAR PIPE COVER HEIGHTS IN FEET					
		2-5	5-10	10-15	15-20	20-25	25-30
12 & 15	2⅔″×½″ CSPHS (1)	16 GA.					
	2⅔″×½″ CSPLS (1)	16 GA.					
	2⅔″×½″ CAPHS	16 GA.					
	PVC	SMOOTH WALL (SOLID WALL)					
	HDPE						FF
	RCP (11)						
18	2⅔″×½″ CSPHS (1)	16 GA.					
	2⅔″×½″ CSPLS (1)	16 GA.					
	2⅔″×½″ CAPHS	16 GA.					
	SRS (1)	16 GA.					
	SRA	16 GA.					
	PVC	RIBBED (PROFILE WALL)					
	HDPE						FF
	RCP (11)						

PIPE DIA. (IN)	PIPE TYPE	CIRCULAR PIPE COVER HEIGHTS IN FEET											
		2-5	5-10	10-15	15-20	20-25	25-30	30-35	35-40	40-45	45-50	50-55	55-60	60-65
21	2⅔″×½″ CSPHS (1)	16 GA.												
	2⅔″×½″ CSPLS (1)	16 GA.					10 GA.							
	2⅔″×½″ CAPHS	16 GA.												
	SRS (1)	16 GA.												
	SRA	16 GA.				14 GA.								
	PVC	RIBBED (PROFILE WALL)												
	HDPE					FF								
	RCP (11)													
24 (6)	2⅔″×½″ CSPHS (1)	16 GA.											14 GA.	
	2⅔″×½″ CSPLS (1)	16 GA.					10 GA.							
	2⅔″×½″ CAPHS	16 GA.						14 GA.				12 GA.		
	SRS (1)	16 GA.						14 GA.				12 GA.		
	SRA	16 GA.				14 GA.		12 GA.			10 GA.			
	PVC	RIBBED (PROFILE WALL)												
	HDPE					FF								
	RCP (11)													

2-5	5-10	10-15	15-20	20-25	25-30	30-35	35-40	40-45	45-50	50-55	55-60	60-65

NOTES

(1) GAGES FOR CORRUGATED STEEL PIPE ITEMS SHOWN ARE BASED ON ALUMINUM-COATED TYPE 2 STEEL AS PER AASHTO M-274. ALUMINUM COATED TYPE 2 STEEL IS ONLY PERMITTED IN Ph RANGES OF 5 TO 9

2. WHEN CORRUGATED STEEL PIPE IS ZINC COATED (GALVANIZED) THE GAGE SHALL BE ONE GAGE HEAVIER THAN SHOWN IN THE TABLES.
3. CSP, CAP, SRS AND SRA ARE SHOWN IN GAGE.
4. MAXIMUM COVER HEIGHT MEASURED FROM TOP OF PIPE TO SUBGRADE ELEVATION SHALL GOVERN GAGE OF PIPE TO BE USED FOR ENTIRE LENGTH OF PIPE INSTALLATION.
5. MINIMUM COVER HEIGHTS FOR PIPE SHALL BE 2 FEET. GAGE OF PIPE FOR COVER HEIGHTS LESS THAN 2 FEET SHALL BE THAT SHOWN FOR COVER HEIGHTS OF 30 FEET (SEE STD. SPECIFICATIONS FOR BACKFILL). HDPE AND PVC SHALL NOT BE PERMITTED FOR COVER HEIGHTS LESS THAN 2 FEET.

(6) 24″ DIA. PIPE IS MINIMUM SIZE FOR COVER HEIGHTS FROM 30 FEET TO 65 FEET.

7. MINIMUM COVER HEIGHT FOR ENTRANCE PIPE SHALL BE 0.5 FEET.
8. GAGE OF ENTRANCE PIPE FOR COVER HEIGHTS LESS THAN 2 FEET SHALL MEET THE FOLLOWING REQUIREMENTS:
   a. GAGE OF CSP SHALL BE THAT SHOWN FOR HEIGHTS OF 30 FEET.
   b. GAGE OF CAP SHALL BE ONE GAGE HEAVIER THAN SHOWN IN THE TABLE.
9. ALL CIRCULAR STRUCTURAL PLATE SHALL BE 5% VERTICALLY ELONGATED.
10. SEE CURRENT STANDARD DRAWING RDI-035 FOR COATINGS, LININGS AND PAVINGS FOR NON-STRUCTURAL PIPE.

(11) SEE DETAIL SHEET "PIPE BEDDING FOR CULVERTS, ENTRANCE, AND STORM SEWER REINFORCED CONC. PIPE" AND DETAIL SHEET "PIPE BEDDING TRENCH CONDITION REINFORCED CONC. PIPE" FOR RCP COVER HEIGHT AND BEDDING REQUIREMENTS.

LEGEND

CSPHS: CORRUGATED STEEL PIPE WITH HELICAL LOCK SEAM OR HELICAL WELDED SEAM (HELICAL CORR.)
CSPLS: CORRUGATED STEEL PIPE WITH LONGITUDINAL RIVETED OR SPOT WELDED SEAM (ANNULAR CORR.)
CAPHS: CORRUGATED ALUMINUM ALLOY PIPE WITH HELICAL LOCK SEAM (HELICAL CORR.)
HDPE: HIGH DENSITY POLYETHYLENE PIPE
PVC: POLYVINYL CHLORIDE
SRS: SPIRAL RIB STEEL
SRA: SPIRAL RIB ALUMINUM
RCP: CIRCULAR REINFORCED CONCRETE PIPE
FF: FLOWABLE FILL REQUIRED

12″ PIPE - 24″ PIPE

KENTUCKY DEPARTMENT OF HIGHWAYS

CULVERT, ENTRANCE & STORM SEWER PIPE TYPES & COVER HEIGHTS

APPROVED _____ TEBM, DIVISION OF DESIGN — 04-25-08 DATE

009

Preliminary Plans

MicroStation v8.11.7.443 E-SHEET NAME: USER: tvonbehren DATE PLOTTED: January 2, 2012 FILE NAME: P:\CIVIL\147\N6-2021.00\CONTRACT PLANS AND PROPOSAL\CONTRACT PLAN SET\ROADWAY\R144000S.DGN

COUNTY OF	ITEM NO.	SHEET NO.
CAMPBELL	6-2021.00	R145

TRAFFIC CONTROL GENERAL

EXCEPT AS PROVIDED HEREIN, MAINTAIN AND CONTROL TRAFFIC IN ACCORDANCE WITH THE 2008 STANDARD SPECIFICATIONS, THE STANDARD DRAWINGS AND THE MANUAL ON UNIFORM TRAFFIC CONTROL DEVICES (MUTCD), CURRENT EDITIONS. EXCEPT FOR THE ROADWAY AND TRAFFIC CONTROL BID ITEMS LISTED, ALL ITEMS OF WORK NECESSARY TO MAINTAIN AND CONTROL TRAFFIC WILL BE PAID AT THE LUMP SUM BID PRICE TO "MAINTAIN AND CONTROL TRAFFIC". ALL LANE CLOSURES USED ON THE PROJECT WILL BE IN COMPLIANCE WITH THE APPROPRIATE STANDARD DRAWINGS.

CONTRARY TO SECTION 106.01, TRAFFIC CONTROL DEVICES USED ON THIS PROJECT MAY BE NEW, OR USED IN LIKE NEW CONDITION, AT THE BEGINNING OF THE WORK AND MAINTAINED IN LIKE NEW CONDITION UNTIL COMPLETION OF THE WORK. TRAFFIC CONTROL DEVICES WILL CONFORM TO CURRENT MUTCD SPECIFICATIONS.

DURING CONSTRUCTION, SIGNS AND PORTABLE CHANGEABLE MESSAGE SIGNS WILL BE INSTALLED AT LOCATIONS SPECIFIED BY THE ENGINEER. SEE THE MAINTENANCE OF TRAFFIC CONSTRUCTION PHASING PLAN FOR TRAFFIC CONTROL DETAILS DURING EACH PHASE OF CONSTRUCTION. THE MINIMUM LANE WIDTH FOR THIS PROJECT SHALL BE 11 FEET. DURING CONSTRUCTION, THE EXISTING POSTED 65 MPH SPEED LIMIT SHALL BE REDUCED TO 55 MPH.

IN THESE NOTES, A WORK WEEK SHALL BE FROM 6 AM ON MONDAY TO 8 PM ON FRIDAY AND A WEEKEND SHALL BE FROM 8 PM ON FRIDAY TO 6 AM THE FOLLOWING MONDAY.

MAINTENANCE OF TRAFFIC ACTIVITIES WILL BE REQUIRED ON THE OHIO SIDE OF THE TWIN I-471 BRIDGES OVER THE OHIO RIVER AT THE NORTH END OF THIS PROJECT.

DRUMS OR TEMPOARAY CONCRETE BARRIER WALL ARE REQUIRED FOR ALL TRAFFIC OPERATIONS IN KENTUCKY AND OHIO. THE USE OF CONES WILL NOT BE PERMITTED.

NO PAYMENT WILL BE AWARDED FOR VALUE ENGINEERING THE MAINTENANCE OF TRAFFIC PLANS.

CONSTRUCTION PHASING AND SEQUENCE OF CONSTRUCTION

CONSTRUCTION PHASING AND THE SEQUENCE OF CONSTRUCTION WILL BE MAINTAINED AS SHOWN IN THE PLANS AND THE MAINTENANCE OF TRAFFIC NOTES UNLESS OTHERWISE APPROVED BY THE ENGINEER.

ALL I-471 NORTHBOUND WORK AND ASSOCIATED RAMP WORK AT THE I-275, US 27, GRAND AVENUE, MEMORIAL PARKWAY AND KY 8 INTERCHANGES IS TO BE COMPLETED BY DECEMBER 1, 2012. NO TRAFFIC IMPACTS WILL BE PERMITTED ON I-471 SOUTHBOUND OR ASSOCIATED RAMPS PRIOR TO COMPLETION OF ALL I-471 NORTHBOUND WORK AND ASSOCIATED RAMPS.

NO TRAFFIC IMPACTS WILL BE ALLOWED ON I-471, AND ASSOCIATED RAMPS, IN EITHER DIRECTION FROM DECEMBER 1, 2012 UNTIL APRIL 1, 2013.

CONSTRUCTION SIGNING IS NOT TO BE INSTALLED ON I-471 SOUTHBOUND PRIOR TO BEGINNING WORK ON THE SOUTHBOUND SIDE. SIGNS FOR TEMPORARY SHOULDER CLOSURES ON I-471 SOUTHBOUND ARE TO BE INSTALLED, THEN REMOVED WHEN THE SHOULDER IS REOPENED.

IF THE ASPHALT PAVEMENT ALTERNATE IS CHOSEN, THE ASPHALT SURFACE COURSE IS NOT TO BE PLACED UNTIL ALL AREAS, OF THE DIRECTION UNDER CONSTRUCTION, HAVE THEIR FINAL BASE COURSE. FINAL STRIPING IS THEN TO BE PLACED ON THE SURFACE COURSE.

ALL I-471 SOUTHBOUND WORK AND ASSOCIATED RAMP WORK AT THE I-275, US 27, GRAND AVENUE, MEMORIAL PARKWAY AND KY 8 INTERCHANGES IS TO BE COMPLETED BY DECEMBER 1, 2013.

WORK ON I-471 NB AND SB FROM THE BEGINNING OF THE PROJECT TO THE I-471/I-275 INTERCHANGE IS ONLY TO BE DONE DURING THE SUMMER MONTHS WHEN NORTHERN KENTUCKY UNIVERSITY IS NOT IN A SPRING OR FALL SEMESTER.

THE CONTRACTOR MUST NOTIFY THE ENGINEER 14 DAYS PRIOR TO MAJOR TRAFFIC CHANGES OR RAMP CLOSURES. SEE THE SPECIAL NOTE FOR FIXED COMPLETION DATE AND LIQUIDATED DAMAGES FOR ADDITIONAL DETAILS.

RAMP CLOSURES

ONLY ONE RAMP MAY BE CLOSED AT A TIME UNLESS SPECIFICALLY NOTED OTHERWISE IN THESE PLANS OR APPROVED BY THE ENGINEER. THE CONTRACTOR SHALL PLACE A PORTABLE CHANGEABLE MESSAGE SIGN WARNING OF PENDING RAMP CLOSURE IN THE AREA OF EACH RAMP TO BE CLOSED AT LEAST 10 DAYS PRIOR TO ITS CLOSURE.

THE CONTRACTOR WILL BE PERMITTED TO CLOSE RAMPS B, C, D, E AND G AT THE I-471/I-275 INTERCHANGE FOR A PERIOD OF 9 CONSECUTIVE DAYS (TWO WEEKENDS AND ONE WORK WEEK) AND ALL RAMP WORK IS TO BE COMPLETED DURING THAT TIME. THE CONTRACTOR WILL BE PERMITTED TO CLOSE RAMP A AT THE I-275/I-471 INTERCHANGE FOR A PERIOD OF 16 CONSECUTIVE DAYS (THREE WEEKENDS AND TWO WORK WEEKS) AND ALL RAMP WORK IS TO BE COMPLETED BY THE END OF THE PERIOD INCLUDING THE SEALING OF SHOULDERS. THE CLOSURE OF RAMPS E AND G MUST OCCUR DURING THE ACCELERATED CONSTRUCTION OF THE SECTION OF I-471 NB THEY JOIN AS SHOWN IN THE NOTE TITLED "ACCELERATED CONSTRUCTION".

THE TWO LANE RAMPS AT THE I-471/I-275 INTERCHANGE, RAMPS F AND H, ARE NOT TO BE CLOSED. TRAFFIC IS TO BE REDUCED TO ONE LANE AND SHIFTED PARTIALLY ONTO THE SHOULDER WHILE WORK IS BEING PERFORMED ON HALF OF THE RAMP, THEN SHIFTED TO THE OPPOSITE SIDE TO PERFORM THE REMAINING WORK ON THE RAMP. SEE THE MAINTENANCE OF TRAFFIC PLANS, TYPICAL SECTIONS AND NOTES FOR DETAILS ON CONSTRUCTION PHASING FOR THESE RAMPS.

THE CONTRACTOR WILL BE PERMITTED TO CLOSE ALL FOUR US 27 RAMPS FOR A PERIOD OF 16 CONSECUTIVE DAYS (THREE WEEKENDS AND TWO WORK WEEKS) AND ALL RAMP WORK IS TO BE COMPLETED DURING THAT TIME INCLUDING THE SEALING OF SHOULDERS.

THE CONTRACTOR WILL BE PERMITTED TO CLOSE GRAND AVENUE (GA) RAMPS E, EE, AND F FOR A PERIOD OF 16 CONSECUTIVE DAYS (THREE WEEKENDS AND TWO WORK WEEKS) AND ALL RAMP WORK IS TO BE COMPLETED DURING THAT TIME.

THE CONTRACTOR WILL BE PERMITTED TO CLOSE MEMORIAL PARKWAY (MP) RAMPS M AND N FOR A PERIOD OF 16 CONSECUTIVE DAYS (THREE WEEKENDS AND TWO WORK WEEKS) AND ALL RAMP WORK IS TO BE COMPLETED DURING THAT TIME.

RAMP CLOSURES (CONTINUED)

THE CONTRACTOR WILL BE PERMITTED TO CLOSE GA RAMP K AND MP RAMP D ON I-471 NORTHBOUND SIMULTANEOUSLY FOR 16 DAYS (THREE WEEKENDS AND TWO WORK WEEKS) DURING PHASE 3. THE CONTRACTOR WILL ALSO BE PERMITTED TO CLOSE GA RAMP H AND MP RAMP A ON I-471 SOUTHBOUND SIMULTANEOUSLY FOR 16 DAYS (THREE WEEKENDS AND TWO WORK WEEKS) DURING PHASE 3. DURING THE 16 DAYS THE RAMPS ON ONE DIRECTION OF I-471 ARE CLOSED, ALL WORK ON THE MAINLINE IN PHASE 3, INCLUDING THE WORK ON THE BRIDGE OVER CHESAPEAKE AVENUE, MUST BE COMPLETED.

THE CONTRACTOR WILL BE PERMITTED TO CLOSE KY 8 RAMPS A, B, K AND L (RAMPS A AND L SIMULTANEOUSLY, RAMPS B AND K SIMULTANEOUSLY) FOR A PERIOD OF 16 CONSECUTIVE DAYS (THREE WEEKENDS AND TWO WORK WEEKS) IN PHASE 3 AND ALL RAMP WORK IS TO BE COMPLETED BY THE END OF THE PERIOD. THESE RAMPS SHALL BE CLOSED DURING THE SAME PERIOD AS THE ACCELERATED CONSTRUCTION SECTION OF I-471 FROM THE I-471 TWIN BRIDGES OVER 6TH STREET TO THE END OF THE PROJECT IS PERFORMED.

COMPLETION DATE DISINCENTIVE

SEE THE SPECIAL NOTE FOR FIXED COMPLETION DATES AND LIQUIDATED DAMAGES FOR DETAILS CONCERNING LIQUIDATED DAMAGES TO BE CHARGED TO THE CONTRACTOR FOR FAILURE TO COMPLETE ANY WORK BY THE SPECIFIED COMPLETION DATE.

ACCELERATED CONSTRUCTION

FOR EACH OF THE FOLLOWING ACCELERATED CONSTRUCTION AREAS THE CONTRACTOR WILL HAVE 16 CONSECUTIVE DAYS (THREE WEEKENDS AND TWO WORK WEEKS) TO COMPLETE ALL WORK, INCLUDING ANY BRIDGE WORK, SHOWN IN THE PLANS FOR THAT AREA (WITH THE EXCEPTION OF THE ASPHALT SURFACE COURSE WHEN ASPHALT IS CHOSEN AS THE ALTERNATE PAVEMENT TYPE OR WHERE NO ALTERNATE PAVEMENT IS SHOWN):

a. ALL PHASE 2 WORK ON I-471 NB FROM US 27 TO I-275 NB STATION 53+00

b. ALL PHASE 3 WORK ON I-471 NB FROM US 27 TO I-275 NB STATION 53+00

c. ALL PHASE 2 WORK ON I-471 NB FROM THE SOUTH END OF THE I-471 BRIDGE OVER 6TH STREET TO THE NORTH LIMITS OF THE PROJECT ON THE OHIO RIVER BRIDGE INCLUDING ALL BRIDGE WORK ON BOTH BRIDGES.

d. ALL PHASE 2 WORK ON I-471 SB FROM THE SOUTH END OF THE I-471 BRIDGE OVER 6TH STREET TO THE NORTH LIMITS OF THE PROJECT ON THE OHIO RIVER BRIDGE INCLUDING ALL BRIDGE WORK ON BOTH BRIDGES.

e. ALL PHASE 3 WORK ON I-471 NB FROM THE I-471 BRIDGE OVER 6TH STREET TO THE NORTH LIMITS OF THE PROJECT ON THE OHIO RIVER BRIDGE INCLUDING ALL BRIDGE WORK ON THE OHIO RIVER BRIDGE AND ALL WORK ON ENTRANCE RAMP A FROM KY 8 AND ALL WORK ON THE EXIT RAMP L TO KY 8. ALSO, ENOUGH OF THE WORK ON THE I-471 BRIDGE OVER 6TH STREET MUST BE COMPLETED, WITHOUT CLOSING MP RAMP M, SO THAT THE KY 8 RAMP L CAN BE REOPENED AT THE END OF THE 16 DAY PERIOD. THE REMAINING BRIDGE WORK ON THE I-471 BRIDGE OVER 6TH STREET IS TO BE COMPLETED WHEN THE MP RAMP M IS CLOSED, AND WITHOUT CLOSING KY 8 RAMP L DURING THAT TIME.

f. ALL PHASE 3 WORK ON I-471 SB FROM THE I-471 BRIDGE OVER 6TH STREET TO THE NORTH LIMITS OF THE PROJECT ON THE OHIO RIVER BRIDGE INCLUDING ALL BRIDGE WORK ON THE OHIO RIVER BRIDGE, ALL WORK ON EXIT RAMP B TO KY 8 AND ALL WORK ON ENTRANCE RAMP K FROM KY 8. ALSO, ENOUGH OF THE WORK ON THE I-471 BRIDGE OVER 6TH STREET MUST BE COMPLETED, WITHOUT CLOSING MP RAMP N, SO THAT KY 8 RAMP K CAN BE REOPENED AT THE END OF THE 16 DAY PERIOD. THE REMAINING BRIDGE WORK ON THE I-471 BRIDGE OVER 6TH STREET IS TO BE COMPLETED WHEN MP RAMP N IS CLOSED, AND WITHOUT CLOSING KY 8 RAMP K AGAIN.

g. ALL PHASE 3 WORK ON I-471 NB BETWEEN GRAND AVENUE ENTRANCE RAMP K AND MEMORIAL PARKWAY EXIT RAMP D INCLUDING ALL WORK ON THE RAMPS AND THEIR GORE AREAS AND ALL WORK ON THE I-471 NB BRIDGE OVER CHESAPEAKE AVENUE.

h. ALL PHASE 3 WORK ON I-471 SB BETWEEN GRAND AVENUE EXIT RAMP H AND MEMORIAL PARKWAY ENTRANCE RAMP A INCLUDING ALL WORK ON THE RAMPS AND THEIR GORE AREAS AND ALL WORK ON THE I-471 SB BRIDGE OVER CHESAPEAKE AVENUE.

THE START OF EACH 16 DAY PERIOD WILL BEGIN WHEN THE EXISTING NUMBER OF TRAFFIC LANES IN THESE AREAS IS REDUCED AND WILL END WHEN THE EXISTING NUMBER OF TRAFFIC LANES HAS BEEN RESTORED WITH THE EXCEPTION OF LANE TAPERS TO REDUCE THE NUMBER OF LANES ENTERING ADJACENT CONSTRUCTION AREAS.

ITEM e. ABOVE MUST BE PERFORMED IMMEDIATELY FOLLOWING THE COMPLETION OF ITEM c. ABOVE FOR A TOTAL COMPLETION TIME OF 32 CONSECUTIVE DAYS. SIMILARLY, ITEM f. ABOVE MUST BE PERFORMED IMMEDIATELY FOLLOWING THE COMPLETION OF ITEM d. ABOVE FOR A TOTAL COMPLETION TIME OF 32 CONSECUTIVE DAYS.

PRIOR TO BEGINNING WORK ON, OR AFTER COMPLETION OF, THE ACCELERATED WORK LISTED ABOVE ON I-471 NB OR SB FROM THE I-471 TWIN BRIDGES OVER 6TH STREET TO THE NORTH LIMITS OF THE PROJECT ON THE OHIO RIVER BRIDGE, TRAFFIC ON KY 8 RAMPS A OR B MAY NOT BE IMPEDED, OTHER THAN BY SHORT TERM SHOULDER CLOSURES APPROVED BY THE ENGINEER. NO LANE CLOSURES WILL BE PERMITTED IN OHIO EXCEPT FOR THE 32 DAYS REQUIRED FOR THIS ACCLERATED WORK IN EACH DIRECTION OF I-471.

PHASE 1 CONSTRUCTION

THE EXISTING NUMBER OF TRAFFIC LANES ARE TO BE MAINTAINED DURING PHASE 1 CONSTRUCTION FROM THE NORTH END OF THE I-471 NB/SB BIFURCATION (THE BEGINNING OF THE 16' PLANTER MEDIAN) TO THE NORTH END OF THE PROJECT. IN THE EVENT THE INSIDE SHOULDER PAVEMENT FAILS DURING PHASE 1 CONSTRUCTION, WITH THE APPROVAL OF THE ENGINEER, THE CONTRACTOR IS TO REDUCE TRAFFIC TO TWO LANES BY USING TRAFFIC BARRELS TO CLOSE THE INSIDE SHOULDER. THE CONTRACTOR WILL HAVE FIVE (5) WEEKDAY DAYS TO REPAIR THE FAILED AREAS AND RE-OPEN THE SHOULDER TO TRAFFIC. ALL ADDITIONAL WEEKDAY DAYS BEYOND THE FIVE DAY CLOSURE OF THE SHOULDER THAT THE SHOULDER REMAINS CLOSED WILL BE COUNTED AGAINST THE NUMBER OF DAYS THE CONTRACTOR SELECTED FOR TWO LANE REDUCTIONS IN PART B OF THE CONTRACT BID.

PHASE 1 CONSTRUCTION (CONTINUED)

NORTHBOUND I-471 FROM THE I-471/US 27 INTERSECTION TO THE NORTH END OF THE I-471 NB/SB BIFURCATION, REDUCE TRAFFIC TO THE NUMBER OF LANES SHOWN ON THE MAINTENANCE OF TRAFFIC PLANS AND TYPICAL SECTIONS, SHIFT TRAFFIC ONTO THE INSIDE SHOULDER AND DRIVING LANE, CONSTRUCT THE PHASE 1 SLIP RAMPS OR TAPERS TO AND FROM RAMPS AND INSTALL THE TEMPORARY BARRIER WALL. SOUTHBOUND I-471 FROM THE I-471/US 27 INTERSECTION TO THE NORTH END OF THE I-471 NB/SB BIFURCATION, REDUCE TRAFFIC TO THE NUMBER OF LANES SHOWN ON THE MAINTENANCE OF TRAFFIC PLANS AND TYPICAL SECTIONS, SHIFT TRAFFIC ONTO THE INSIDE SHOULDER AND DRIVING LANE, CONSTRUCT THE PHASE 1 SLIP RAMPS OR TAPERS TO AND FROM RAMPS AND INSTALL THE TEMPORARY BARRIER WALL. FROM THE NORTH END OF THE I-471 NB/SB BIFURCATION TO THE NORTH END OF THE PROJECT, SHIFT THE I-471 TRAFFIC TO THE INSIDE SHOULDER, LANE, AND CENTER LANE, CONSTRUCT THE PHASE 1 SLIP RAMPS OR TAPERS TO AND FROM RAMPS AND INSTALL THE TEMPORARY BARRIER WALL AS SHOWN ON THE PHASE 1 MAINTENANCE OF TRAFFIC PLANS AND TYPICAL SECTIONS.

REMOVE THE EXISTING OUTSIDE SHOULDER WHERE SHOWN ON THE MAINTENANCE OF TRAFFIC PLANS FOR PHASE 1 AND REPLACE WITH THE PERMANENT SHOULDER OR TEMPORARY SHOULDER (WHERE TEMPORARY SHOULDER PAVEMENT IS NOTED TO BE USED ON THE PLANS). CONSTRUCT THE TEMPORARY SHOULDER WIDENING FROM I-471 STA 18+50 TO I-471 SB STA 28+30. REMOVE THE EXISTING GUARDRAIL AND INSTALL NEW GUARDRAIL AS SHOWN ON THE PROJECT PLANS IN THE AREAS WHERE THE SHOULDERS ARE BEING REPLACED (PERMANENT OR TEMPORARY SHOULDER).

IF THE JPC PAVEMENT ALTERNATE IS CHOSEN, WHERE ALTERNATE PAVEMENT TYPES ARE INCLUDED IN THE PLANS, THE CONTRACTOR HAS THE OPTION OF USING EITHER JPC OR ASPHALT PAVEMENT FOR THE OUTSIDE SHOULDERS REPLACED IN PHASE 1 (SEE THE ROADWAY TYPICAL SECTIONS). ALL I-471 OUTSIDE SHOULDERS ARE TO BE REPLACED USING THE SAME PAVEMENT TYPE, INCLUDING THOSE NOT REPLACED UNTIL PHASE 3, IN THE AREAS WHERE ALTERNATE PAVEMENT TYPES ARE INCLUDED IN THE PLANS.

PHASE 2 CONSTRUCTION

NORTHBOUND I-471 FROM THE BEGINNING OF THE PROJECT AT THE I-471/US 27 INTERSECTION TO THE END OF THE BARRIER WALL (JUST NORTH OF THE BEGINNING OF THE I-471 NB/SB BIFURCATION), REDUCE TRAFFIC TO ONE LANE AND SHIFT ONTO THE OUTSIDE SHOULDER AND INSTALL THE TEMPORARY BARRIER WALL AS SHOWN ON THE MAINTENANCE OF TRAFFIC PLANS AND TYPICAL SECTIONS FOR PHASE 2. CONSTRUCT THE INSIDE SHOULDER, INSIDE LANE AND HALF OF THE OUTSIDE LANE.

NORTHBOUND I-471 FROM THE END OF THE BARRIER WALL JUST NORTH OF THE I-471 NB/SB BIFURCATION TO RAMP B AT THE I-471/I-275 INTERCHANGE, REDUCE TRAFFIC TO ONE LANE, SHIFT TRAFFIC TO THE OUTSIDE, CONSTRUCT THE SLIP RAMPS TO THE I-275 RAMPS E AND B AND INSTALL THE TEMPORARY BARRIER WALL AS SHOWN ON THE MAINTENANCE OF TRAFFIC PLANS AND TYPICAL SECTIONS FOR PHASE 2. CONSTRUCT THE INSIDE LANE AND SHOULDER IN THE AVAILABLE AREAS WHILE MAINTAINING TRAFFIC TO THE I-275 RAMPS. CLOSE RAMPS E AND B AND CONSTRUCT THE REMAINING PHASE 2 WORK IN THIS AREA. SEE THE SECTION TITLED "RAMP CLOSURES" IN THESE NOTES FOR RAMP CLOSURE DETAILS.

SOUTHBOUND I-471 FROM THE BEGINNING OF THE PROJECT AT THE I-471/US 27 INTERSECTION TO JUST NORTH OF THE BEGINNING OF THE I-471 NB/SB BIFURCATION, REDUCE TRAFFIC TO TWO LANES AND SHIFT ONTO THE TEMPORARY WIDENED OUTSIDE SHOULDER AND PART OF THE DRIVING LANE AND RELOCATE THE PHASE 1 TEMPORARY BARRIER WALL AS SHOWN ON THE MAINTENANCE OF TRAFFIC PLANS AND TYPICAL SECTIONS. CONSTRUCT THE INSIDE SHOULDER, INSIDE LANE AND CENTER LANE.

SOUTHBOUND I-471 FROM JUST NORTH OF THE I-471 NB/SB BIFURCATION TO I-275 RAMP C, REDUCE TRAFFIC TO TWO LANES (WITH TRAFFIC FROM RAMP C BECOMING THE SECOND LANE), SHIFT TRAFFIC TO THE OUTSIDE, CONSTRUCT THE SLIP RAMP FROM THE I-275 RAMP D AND RELOCATE THE PHASE 1 TEMPORARY BARRIER WALL AS SHOWN ON THE MAINTENANCE OF TRAFFIC PLANS AND TYPICAL SECTIONS. CONSTRUCT THE INSIDE SHOULDER, INSIDE LANE AND HALF OF THE CENTER LANE IN THE AVAILABLE AREAS WHILE MAINTAINING TRAFFIC ON RAMP D. CLOSE RAMP D AND CONSTRUCT THE REMAINING PHASE 2 WORK IN THIS AREA. SEE THE SECTION TITLES "RAMP CLOSURES" IN THESE NOTES FOR RAMP CLOSURE DETAILS.

SOUTHBOUND I-471 FROM I-275 RAMP C TO I-275 RAMP F, REDUCE TRAFFIC TO ONE LANE, SHIFT TO THE OUTSIDE AND RELOCATE THE PHASE 1 TEMPORARY BARRIER WALL AS SHOWN ON THE MAINTENANCE OF TRAFFIC PLANS AND TYPICAL SECTIONS FOR PHASE 2. CONSTRUCT THE INSIDE SHOULDER AND INSIDE LANE.

SOUTHBOUND I-471 FROM I-275 RAMP F TO I-275 RAMP A, REDUCE TRAFFIC TO TWO LANES, SHIFT TRAFFIC ONTO THE OUTSIDE SHOULDER AND DRIVING LANE, CONSTRUCT THE SLIP RAMP TO RAMP F AND RELOCATE THE PHASE 1 TEMPORARY BARRIER WALL AS SHOWN ON THE MAINTENANCE OF TRAFFIC PLANS AND TYPICAL SECTIONS FOR PHASE 2. CONSTRUCT THE INSIDE SHOULDER AND INSIDE LANE, WIDENING TO THE INSIDE AS SHOWN IN THE PROJECT PLANS, IN THE AVAILABLE AREAS WHILE MAINTAINING TRAFFIC ON RAMP F.

NORTHBOUND I-471 FROM I-275 RAMP B AND SOUTHBOUND I-471 FROM THE I-275 RAMP A, TO THE END OF THE PROJECT, REDUCE TRAFFIC TO TWO LANES, SHIFT TRAFFIC TO THE OUTSIDE, CONSTRUCT THE SLIP RAMPS OR TAPERS TO AND FROM THE RAMPS AT THE US 27, GRAND AVENUE, MEMORIAL PARKWAY AND KY 8 INTERCHANGES AND RELOCATE THE PHASE 1 TEMPORARY BARRIER WALL, OR INSTALL NEW TEMPORARY BARRIER WALL, AS SHOWN ON THE MAINTENANCE OF TRAFFIC PLANS AND TYPICAL SECTIONS FOR PHASE 2. CONSTRUCT THE INSIDE SHOULDER, INSIDE LANE AND HALF OF THE CENTER LANE. REMOVE APPROXIMATELY 1480' OF THE I-471 SOUTHBOUND INSIDE MEDIAN BARRIER, AND MATERIAL WITHIN THE 16' PLANTER MEDIAN, STARTING AT THE SOUTHERN END OF THE BARRIER. CONSTRUCT THE WIDENED SECTION OF I-471 SOUTHBOUND AND NEW CONCRETE MEDIAN BARRIER AS SHOWN IN THE PROJECT PLANS. PERFORM THE BRIDGE WORK SHOWN IN THE BRIDGE PROPOSAL IN THE AVAILABLE AREAS ON THE I-471 BRIDGES OVER US 27, GRAND AVENUE, CHESAPEAKE AVENUE, 6TH STREET, KY 8 AND THE OHIO RIVER.

PHASE 2A CONSTRUCTION

CONSTRUCT THE TEMPORARY I-275 RAMP F EXIT TAPER AND LANE FROM I-471 SOUTHBOUND ON THE NEWLY CONSTRUCTED INSIDE SHOULDER, INSTALL THE TEMPORARY BARRIER WALL ON THE TEMPORARY RAMP F EXIT LANE AND SHIFT RAMP F TRAFFIC ONTO THE EXIT LANE. REPOSITION THE TEMPORARY BARRIER WALL ON I-471 SOUTHBOUND INTO THE NEW LOCATION AS SHOWN ON THE MAINTENANCE OF TRAFFIC PLANS FOR PHASE 2A. CONSTRUCT THE REMAINING PHASE 2 WORK IN THE AREA.

Preliminary Plans Not For Construction

MAINTENANCE OF TRAFFIC NOTES

MicroStation v8.11.7.443 E-SHEET NAME: USER: jnapier DATE PLOTTED: January 5, 2012 FILE NAME: P:\CIVIL\471N6-2021.00\CONTRACT PLANS AND PROPOSAL\REVISIONS AFTER SUBMITTAL\R145OOMT.DGN

COUNTY OF	ITEM NO.	SHEET NO.
CAMPBELL	6-2021.00	R146

PHASE 3 CONSTRUCTION

NORTHBOUND I-471 FROM THE BEGINNING OF THE PROJECT AT THE I-471/US 27 INTERSECTION TO THE END OF THE BARRIER WALL (JUST NORTH OF THE BEGINNING OF THE I-471 NB/SB BIFURCATION), REDUCE TRAFFIC TO ONE LANE AND SHIFT ONTO THE INSIDE LANE AND SHOULDER, RELOCATE THE PHASE 2 TEMPORARY BARRIER WALL AS SHOWN ON THE MAINTENANCE OF TRAFFIC PLANS AND TYPICAL SECTIONS FOR PHASE 3. CONSTRUCT THE OUTSIDE SHOULDER AND HALF OF THE OUTSIDE LANE.

NORTHBOUND I-471 FROM THE END OF THE BARRIER WALL JUST NORTH OF THE I-471 NB/SB BIFURCATION TO RAMP B AT THE I-471/I-275 INTERCHANGE, REDUCE TRAFFIC TO ONE LANE, SHIFT TRAFFIC TO THE INSIDE, CONSTRUCT THE SLIP RAMP TO I-275 RAMP H, THE TAPER TO I-275 RAMP G AND RELOCATE THE PHASE 2 TEMPORARY BARRIER WALL AS SHOWN ON THE MAINTENANCE OF TRAFFIC PLANS AND TYPICAL SECTIONS FOR PHASE 3. CONSTRUCT THE OUTSIDE LANE AND SHOULDER IN THE AVAILABLE AREAS WHILE MAINTAINING TRAFFIC TO RAMPS G AND H. CLOSE RAMP G AND CONSTRUCT THE REMAINING PHASE 3 WORK IN THE RAMP AREA. SEE THE SECTION TITLED "RAMP CLOSURES" IN THESE NOTES FOR RAMP CLOSURE DETAILS.

SOUTHBOUND I-471 FROM THE BEGINNING OF THE PROJECT AT THE I-471/US 27 INTERSECTION TO JUST NORTH OF THE BEGINNING OF THE I-471 NB/SB BIFURCATION, REDUCE TRAFFIC TO TWO LANES AND SHIFT TO INSIDE LANE AND SHOULDER AND RELOCATE THE PHASE 2 TEMPORARY BARRIER WALL AS SHOWN ON THE MAINTENANCE OF TRAFFIC PLANS AND TYPICAL SECTIONS FOR PHASE 3. CONSTRUCT THE OUTSIDE LANE AND ANY PERMANENT OUTSIDE SHOULDER NOT CONSTRUCTED IN PHASE 1. REMOVE THE TEMPORARY SHOULDER WIDENING AND INSTALL GUARDRAIL AT THE SAME LOCATION IT WAS PRIOR TO REMOVAL IN PHASE 1.

SOUTHBOUND I-471 FROM JUST NORTH OF THE I-471 NB/SB BIFURCATION TO I-275 RAMP C, REDUCE TRAFFIC TO TWO LANES (WITH TRAFFIC FROM RAMP C BECOMING THE SECOND LANE), SHIFT TRAFFIC TO THE INSIDE, CONSTRUCT THE SLIP RAMP FROM RAMP C AND THE I-275 RAMP D TAPER TO I-471 SB AND RELOCATE THE PHASE 2 TEMPORARY BARRIER WALL AS SHOWN ON THE MAINTENANCE OF TRAFFIC PLANS AND TYPICAL SECTIONS. CONSTRUCT THE OUTSIDE LANE, HALF OF THE CENTER LANE AND ANY PART OF THE PERMANENT OUTSIDE SHOULDER NOT CONSTRUCTED IN PHASE 1 IN THE AVAILABLE AREAS WHILE MAINTAINING TRAFFIC ON RAMP C. CLOSE RAMP C AND CONSTRUCT THE REMAINING PHASE 3 WORK IN THE AREA. SEE THE SECTION TITLED "RAMP CLOSURES" IN THESE NOTES FOR RAMP CLOSURE DETAILS.

SOUTHBOUND I-471 FROM I-275 RAMP C TO I-275 RAMP F, REDUCE TRAFFIC TO ONE LANE, SHIFT TO THE INSIDE AND RELOCATE THE PHASE 2 TEMPORARY BARRIER WALL AS SHOWN ON THE MAINTENANCE OF TRAFFIC PLANS AND TYPICAL SECTIONS FOR PHASE 3. CONSTRUCT THE OUTSIDE SHOULDER AND LANE.

SOUTHBOUND I-471 FROM I-275 RAMP F TO I-275 RAMP A, MAINTAIN THREE LANES OF TRAFFIC IN THE AREA BY SHIFTING TRAFFIC TO THE INSIDE, CONSTRUCT THE I-275 RAMP A LANE TAPER FROM I-471 SB, RELOCATE THE PHASE 2 TEMPORARY BARRIER WALL AS SHOWN ON THE MAINTENANCE OF TRAFFIC PLANS AND TYPICAL SECTIONS FOR PHASE 3. INSTALL THE TEMPORARY BARRIER WALL ON RAMP A AS SHOWN ON THE MAINTENANCE OF TRAFFIC PLANS AND TYPICAL SECTIONS. CONSTRUCT HALF OF THE OUTSIDE LANE AND ANY PORTION OF THE PERMANENT OUTSIDE SHOULDER NOT CONSTRUCTED IN PHASE 1 AND PERFORM AS MUCH OF THE RAMP A WIDENING WORK AS POSSIBLE WHILE MAINTAINING TRAFFIC ON RAMP A. CLOSE RAMP A AND COMPLETE ALL WORK ON THE RAMP AND THE REMAINING PHASE 3 WORK ON I-471 SB IN THE AREA. SEE THE SECTION TITLED "RAMP CLOSURES" IN THESE NOTES FOR RAMP CLOSURE DETAILS.

I-275 WESTBOUND FROM STA 1197+60 TO STA 1215+40, REDUCE I-275 WB TRAFFIC TO TWO LANES AND SHIFT TRAFFIC ONTO THE INSIDE SHOULDER AND DRIVING LANE, CONSTRUCT THE SLIP RAMP FROM I-275 RAMP A TO I-275 WB AND INSTALL THE TEMPORARY BARRIER WALL AS SHOWN ON THE MAINTENANCE OF TRAFFIC PLANS AND TYPICAL SECTIONS. REMOVE THE EXISTING OUTSIDE SHOULDER ON I-275 WB AND CONSTRUCT THE I-275 WB WIDENING AS SHOWN ON THE PROJECT PLANS. WIDEN THE I-275 BRIDGE OVER THREE MILE ROAD AS SHOWN IN THE BRIDGE PLANS.

NORTHBOUND I-471 FROM I-275 RAMP B AND SOUTHBOUND I-471 FROM I-275 RAMP A, TO THE END OF THE PROJECT, REDUCE TRAFFIC TO TWO LANES, SHIFT TRAFFIC TO THE INSIDE LANE AND SHOULDER, CONSTRUCT THE SLIP RAMPS OR TAPERS TO AND FROM THE RAMPS AT THE US 27, GRAND AVENUE, MEMORIAL PARKWAY AND KY 8 INTERCHANGES AND RELOCATE THE PHASE 2 TEMPORARY BARRIER WALL AS SHOWN ON THE MAINTENANCE OF TRAFFIC PLANS AND TYPICAL SECTIONS FOR PHASE 3. CONSTRUCT THE OUTSIDE LANE, HALF OF THE CENTER LANE, THE AUXILIARY LANE (NB AND SB) FROM US 27 TO GRAND AVENUE AND ANY OF THE PERMANENT OUTSIDE SHOULDER NOT CONSTRUCTED IN PHASE 1. CONSTRUCT THE SHOULDER WIDENING AT THE KY 8 RAMP B GORE AREA AND INSTALL THE NEW OUTSIDE SHOULDER BARRIER WALL ON KY 8 RAMP B AND I-471 SB AS SHOWN IN THE PROJECT PLANS. PERFORM THE BRIDGE WORK SHOWN IN THE BRIDGE PROPOSAL IN THE AVAILABLE AREAS ON THE I-471 BRIDGES OVER US 27, GRAND AVENUE, CHESAPEAKE AVENUE, 6TH STREET, KY 8 AND THE OHIO RIVER. CLOSE THE RAMPS AT THE US 27, GRAND AVENUE, MEMORIAL PARKWAY AND KY 8 INTERCHANGES TO COMPLETE ALL WORK ON THE RAMPS AND AREAS ON I-471 THAT WERE NOT CONSTRUCTED WHILE THE RAMPS WERE OPEN. SEE THE SECTIONS TITLED "RAMP CLOSURES" IN THESE NOTES FOR RAMP CLOSURE DETAILS.

PHASE 3A CONSTRUCTION

CONSTRUCT THE I-275 RAMP H ENTRANCE TAPER TO I-471 NB AS SHOWN ON THE MAINTENANCE OF TRAFFIC PLANS FOR PHASE 3A, SHIFT RAMP H TRAFFIC ONTO THE TAPER AND INSTALL THE TEMPORARY BARRIER WALL. ADJUST THE I-471 NB TEMPORARY BARRIER WALL AS SHOWN ON THE MAINTENANCE OF TRAFFIC PLANS FOR PHASE 3A AND CONSTRUCT THE REMAINING PHASE 3 WORK IN THE AREA.

CONSTRUCT THE I-275 RAMP A TAPER FROM I-471 SB TO RAMP A AND THE RAMP A SLIP RAMP TO I-275 WB. SHIFT RAMP A TRAFFIC ONTO THE NEWLY CONSTRUCTED LEFT LANE AND PLACE BARRELS ALONG THE RIGHT EDGE OF THE LANE TO MAINTAIN ONE LANE OF TRAFFIC ON THE RAMP. WHEN THE I-275 WB OUTSIDE WIDENING WORK HAS BEEN COMPLETED, RESTORE I-275 WB TRAFFIC TO THE NORMAL THREE LANES, REMOVE THE RAMP A SLIP RAMP TO I-275 WB AND THE BARRELS ALONG THE RIGHT EDGE OR THE DRIVING LANE TO ALLOW FOR THE USE OF BOTH LANES ON THE RAMP.

HIGHLAND AVENUE BRIDGE WORK

THE CONTRACTOR MAY COMPLETE REPLACEMENT OF THE FENCING ON THE HIGHLAND AVENUE BRIDGE, AS SHOWN IN THE BRIDGE PROPOSAL, AT ANY TIME PRIOR TO THE FINAL PROJECT COMPLETION DATE OF DECEMBER 1, 2013. LANE CLOSURES ON HIGHLAND AVE AND I-471 WILL BE REQUIRED DURING REMOVAL AND INSTALLATION OF THE SAFETY FENCE.

RAMP CLOSURES, LANE CLOSURES AND LANE SHIFTS

ALL LANE CLOSURES, LANE SHIFTS AND TAPERS SHALL BE IN ACCORDANCE WITH THE STANDARD DRAWINGS AND THE MANUAL ON UNIFORM TRAFFIC CONTROL DEVICES (MUTCD). ANY RAMP CLOSURE, LANE CLOSURE OR LANE SHIFT MUST BE APPROVED BY THE ENGINEER PRIOR TO THE CLOSURE OR LANE SHIFT. THE CONTRACTOR MUST NOTIFY THE ENGINEER AT LEAST FIVE (5) DAYS PRIOR TO ANY PROPOSED LANE CLOSURE OR TRAFFIC PATTERN CHANGE.

SIGNS

THE BID ITEM "SIGNS" WILL BE PAID FOR ON A SQUARE FOOT BASIS AND INCLUDES ALL COSTS NECESSARY TO FURNISH THE SIGNS, RELACEMENT OF THE SIGNS IN THE FIRST LOCATION, RELOCATING THE SIGNS FROM ONE LOCATION TO ANOTHER ACCORDING TO THE CONSTRUCTION PHASE, TEMPORARY COVERING OR REMOVAL OF THE SIGNS WHEN THE SIGN DOES NOT APPLY TO THE WORK BEING PERFORMED, AND UPON COMPLETION OF THE PROJECT, REMOVAL OF THE SIGNS FROM THE JOB SITE.

PERMANENT SIGNING MODIFICATIONS

EXISTING GROUND MOUNTED AND OVERHEAD PANEL SIGNS WILL BE COVERED AS CONSTRUCTION PHASING REQUIRES. THE ENGINEER WILL DETERMINE THE DURATION THAT THE COVERING SHALL REMAIN IN PLACE. SINCE MOST MATERIALS USED IN COVERING SIGNS MAY CAUSE PERMANENT DAMAGE TO THE SIGN FACE, POROUS CLOTH COVERS WHICH ARE FOLDED OVER THE SIGN EDGES AND SECURED ON THE BACK OF THE SIGN MAY BE USED OR THIN GAUGE SHEETING MATERIAL MAY BE USED AS SPECIFIED IN THE FOLLOWING NOTE. THE USE OF TAPE, PAPER, PLASTIC OR SHEET METAL FOR COVERING SIGNS IS STRICTLY PROHIBITED. IF ANY SIGN IS DAMAGED AS A RESULT OF BEING COVERED, THE SIGN SHALL BE REPLACED BY THE CONTRACTOR AT NO COST TO THE DEPARTMENT.

EXISTING SHEETING SIGNS WILL BE REMOVED AND RELOCATED DURING CONSTRUCTION. THE COST FOR REMOVING AND RELOCATING SHEETING SIGNS AND ALL HARDWARE NECESSARY SHALL BE INCIDENTAL TO MAINTAIN AND CONTROL TRAFFIC.

COVERING OF PANEL SIGNS

THIN GAUGE SHEETING MATERIAL MATCHING THE BACKGROUND COLOR ON THE PANEL SIGN MAY BE RIVETED TO THE EXISTING GUIDE SIGNS TO REPRESENT TEMPORARY TRAFFIC FLOW PATTERNS DURING CONSTRUCTION. A SPACER SHALL BE PLACED BETWEEN THE EXISTING SIGN FACE AND BACK OF OVERLAY PANEL TO ALLOW FOR AN AIR CAVITY. SPACERS CAN BE FLAT WASHERS 0.267 ID x 0.625 OD x 0.045 THICK. A 3/16" RIVET SHALL BE USED ON 12" CENTERS AROUND THE PERIMETER OF THE OVERLAY PANEL AND PASS THROUGH THE SPACERS. ALL MATERIAL, EQUIPMENT AND LABOR SHALL BE INCIDENTAL TO MAINTAIN AND CONTROL TRAFFIC.

WHEN COVERING A PANEL SIGN FOR A CLOSED RAMP, A "RAMP CLOSED" SIGN MUST BE PLACED ON THE COVERED SIGN.

ARROW PANELS

THE CONTRACTOR WILL PROVIDE ARROW PANELS AS INDICATED IN THE MAINTENANCE OF TRAFFIC PLAN. THE ARROW PANELS SHALL BE MOUNTED IN TRAFFIC-WORTHY CARRIAGES AND MEET THE REQUIREMENTS AS SPECIFIED IN THE CURRENT STANDARD DRAWINGS. PAYMENT FOR THE ARROW PANELS WILL BE BASED ON A CONTRACT UNIT PRICE OF "EACH" AND WILL BE FULL COMPENSATION FOR PROVIDING, PLACING, OPERATING, RELOCATING AND MAINTAINING THE ARROW PANELS.

THE CONTRACTOR WILL HAVE AVAILABLE ONE RESERVE ARROW PANEL TO BE PLACED INTO OPERATION IN THE EVENT OF DAMAGE OR MECHANICAL/ELECTRICAL FAILURE. NO DIRECT PAYMENT WILL BE ALLOWED FOR THE RESERVE UNIT. ALL ARROW PANELS WILL REMAIN THE PROPERTY OF THE CONTRACTOR UPON COMPLETION OF THE PROJECT.

TRAFFIC CONTROL COORDINATOR

THE PRIME CONTRACTOR IS TO DESIGNATE AN EMPLOYEE WHOSE SOLE RESPONSIBILITY IS TO BE THE TRAFFIC COORDINATOR. THE DESIGNATED TRAFFIC COORDINATOR MUST BE CERTIFIED BY THE AMERICAN TRAFFIC SAFETY SERVICES ASSOCIATION (ATSSA). THE TRAFFIC COORDINATOR WILL INSPECT THE PROJECT MAINTENANCE OF TRAFFIC ONCE EVERY TWO HOURS DURING THE CONTRACTOR'S OPERATIONS AND AT ANY TIME A LANE CLOSURE IS IN PLACE. THE TRAFFIC COORDINATOR WILL REPORT ALL INCIDENTS THROUGHOUT THE WORK ZONE TO THE ENGINEER ON THE PROJECT. THE CONTRACTOR WILL FURNISH THE NAME AND TELEPHONE NUMBER WHERE THE TRAFFIC COORDINATOR CAN BE CONTACTED AT ALL TIMES.

DURING ANY PERIOD WHEN A LANE CLOSURE OR TRAFFIC CONTROL DEVICE IS IN PLACE, THE TRAFFIC COORDINATOR WILL ARRANGE FOR PERSONNEL TO BE PRESENT ON THE PROJECT AT ALL TIMES TO INSPECT THE TRAFFIC CONTROL, MAINTAIN THE SIGNING AND DEVICES, AND RELOCATE PORTABLE CHANGEABLE MESSAGE BOARDS AS QUEUE LENGTHS CHANGE. THE PERSONNEL WILL HAVE ACCESS ON THE PROJECT TO A RADIO OR TELEPHONE TO BE USED IN CASE OF EMERGENCIES OR ACCIDENTS.

PAYMENT FOR THE TRAFFIC CONTROL COORDINATOR WILL BE CONSIDERED INCIDENTAL TO THE BID ITEM "MAINTAIN AND CONTROL TRAFFIC".

WRECKER SERVICE

THE CONTRACTOR WILL HAVE CONTINUOUSLY ON CALL A 24-HOUR WRECKER SERVICE THAT THE CONTRACTOR WILL PROMPTLY CONTACT TO REMOVE ANY DISABLED VEHICLE WITHIN THE PROJECT LIMITS. THE WRECKER SERVICE SHOULD HAVE, BUT NOT BE LIMITED TO, THE FOLLOWING ITEMS/CAPABILITIES: CELL PHONE, GASOLINE, JUMPER CABLES, VEHICLE PUSHING, AND TIRE CHANGING. THE CONTRACTOR WILL BE CHARGED THREE THOUSAND DOLLARS ($3,000) LIQUIDATED DAMAGES FOR EACH 15 MINUTE PERIOD FOR ANY INCIDENCE WHEN THE WRECKER SERVICE FAILS TO REACH THE DISABLED VEHICLE BEYOND THE 30 MINUTE ALLOTTED RESPONSE TIME. PAYMENT FOR THE WRECKER SERVICE WILL BE CONSIDERED INCIDENTAL TO THE BID ITEM "MAINTAIN AND CONTROL TRAFFIC".

LOAD TRANSFER ASSEMBLIES REQUIRED IN JPC SHOULDERS

LOAD TRANSFER ASSEMBLIES WILL BE REQUIRED IN ALL JOINTED PLAIN CONCRETE (JPC) SHOULDERS. PAYMENT FOR PROVIDING AND INSTALLING THESE LOAD TRANSFER ASSEMBLIES WILL BE INCLUDED IN THE UNIT BID PRICE FOR JPC PAVEMENT - 13 IN SHLD.

INSTALLATION AND RELOCATION OF TEMPORARY CONCRETE BARRIER WALL

A LANE CLOSURE MUST BE IN PLACE WHILE INSTALLING OR RELOCATING THE TEMPORARY CONCRETE BARRIER WALL.

TRAFFIC MAY BE REDUCED TO ONE LANE BETWEEN THE HOURS OF 10 PM AND 5 AM TO INSTALL OR ADJUST THE TEMPORARY BARRIER WALL. ANY OTHER TIMES ARE TO BE APPROVED BY THE ENGINEER.

PORTABLE CHANGEABLE MESSAGE SIGNS

PROVIDE PORTABLE CHANGEABLE MESSAGE SIGNS IN ADVANCE OF AND WITHIN THE PROJECT AT LOCATIONS TO BE DETERMINED BY THE ENGINEER. IF MORE THAN ONE LANE CLOSURE IS IN PLACE IN THE SAME DIRECTION OF TRAVEL, PROVIDE ADDITIONAL PORTABLE CHANGEABLE MESSAGE SIGNS. PLACE PORTABLE CHANGEABLE MESSAGE SIGNS ONE MILE IN ADVANCE OF THE ANTICIPATED QUEUE AT EACH LANE CLOSURE SO TRAFFIC HAS WARNING OF SLOWED OR STOPPED TRAFFIC AT LEAST ONE MILE BUT NOT MORE THAN TWO MILES BEFORE REACHING THE END OF THE ACTUAL QUEUE. THE LOCATIONS DESIGNATED MAY VARY AS THE WORK PROGRESSES. THE ENGINEER WILL DESIGNATE WHICH MESSAGES ARE REQUIRED. IN THE EVENT OF DAMAGE OR MECHANICAL OR ELECTRICAL FAILURE, THE CONTRACTOR SHALL REPAIR OR REPLACE THE PORTABLE CHANGEABLE MESSAGE SIGN IMMEDIATELY.

TRUCK MOUNTED ATTENUATORS

FURNISH AND INSTALL TRUCK MOUNTED ATTENUATORS (TMA'S) IN ADVANCE OF ALL PAVEMENT REMOVAL AREAS. IF THERE IS LESS THAN 500 FEET BETWEEN WORK SITES, ONLY A SINGLE TMA WILL BE REQUIRED AT A LOCATION AS DIRECTED BY THE ENGINEER. THE TMA'S SHALL BE LOCATED AT THE INDIVIDUAL WORK SITES AND SHALL BE MOVED AS THE WORK ZONE MOVES WITHIN THE PROJECT LIMITS. ALL DETAILS OF THE TMA INSTALLATIONS ARE TO BE APPROVED BY THE ENGINEER. THE CONTRACTOR SHALL RETAIN OWNERSHIP OF THE TMA'S AT THE COMPLETION OF THE PROJECT. TMA'S ARE INCIDENTAL TO "MAINTAIN AND CONTROL TRAFFIC".

CONTRACTOR'S AND CONTRACTOR'S EMPLOYEE'S VEHICLES

MEDIAN CROSSOVERS MAY NOT BE USED UNLESS A REQUEST FOR THEIR USE IS SUBMITTED TO AND APPROVED BY THE ENGINEER.

CONCRETE BARRIER WALL DELINEATORS

THE CONTRACTOR SHALL PROVIDE YELLOW AND WHITE DELINEATORS FOR CONCRETE BARRIERS ON BRIDGES AS SHOWN IN CURRENT STANDARD DRAWING RBM-020. THE DELINEATORS ARE TO BE INSTALLED ON THE CONCRETE BARRIERS OF THE I-471 BRIDGES, EXISTING MEDIAN BARRIER WALL AND THE TEMPORARY CONCRETE BARRIER WALL TYPE 9T. PAYMENT WILL BE BASED ON A CONTRACT UNIT PRICE FOR "EACH" AND WILL BE FULL COMPENSATION FOR PROVIDING AND INSTALLING THE CONCRETE BARRIER WALL DELINEATORS. DELINEATORS PLACED ON TEMPORARY CONCRETE BARRIER WALL TYPE 9T WILL ONLY BE PAID FOR IF THEY ARE NEW DELINEATORS INSTALLED FOR THE CURRENT PROJECT. ANY EXISTING DELINEATORS ON THE TEMPORARY WALL WHICH ARE IN GOOD CONDITION WILL NOT BE PAID FOR BUT WILL BE INCIDENTAL TO MAINTAIN AND CONTROL TRAFFIC. SPACING OF DELINEATORS ON THE BRIDGE BARRIERS IS TO BE AS SHOWN IN CURRENT STANDARD DRAWING RBM-020. ONE DELINEATOR IS REQUIRED ON EACH 20 FOOT SECTION OF TEMPORARY CONCRETE BARRIER WALL TYPE 9T. DELINEATORS PLACED ON THE BRIDGE BARRIERS ARE TO REMAIN IN PLACE AT COMPLETION OF THE PROJECT. DELINEATORS PLACED ON TEMPORARY CONCRETE BARRIER WALL TYPE 9T WILL BE BECOME THE PROPERTY OF THE CONTRACTOR AT COMPLETION OF THE PROJECT.

GUARDRAIL DELINEATORS

THE CONTRACTOR WILL PROVIDE YELLOW AND WHITE DELINEATORS FOR GUARDRAIL AS SHOWN IN THE DETAILS ON SHEET R138, "DELINEATORS FOR GUARDRAIL". THESE DELINEATORS WILL BE PLACED ON THE EXISTING GUARDRAIL FOR MAINTENANCE OF TRAFFIC PURPOSES AND THEN TRANSFERRED TO THE PERMANENT GUARDRAIL FOR ADDITIONAL DELINEATION OF THE FINAL ROADWAY. SPACING OF THE DELINEATORS WILL BE PER THE SPACING TABLE ON SHEET R138 EXCEPT THE MAXIMUM SPACING WILL BE 50' ON CENTERS WHEN TRAFFIC WILL BE LESS THAN EIGHT (8) FEET FROM THE GUARDRAIL. PAYMENT WILL BE BASED ON A CONTRACT UNIT PRICE OF "EACH" AND WILL BE FULL COMPENSATION FOR PROVIDING, INSTALLING THE DELINEATORS FOR MAINTENANCE OF TRAFFIC ON THE EXISTING GUARDRAIL AND THEN MOVING THEM TO THE PERMANENT GUARDRAIL AS INSTRUCTED BY THE ENGINEER.

Preliminary Plans

MAINTENANCE OF TRAFFIC NOTES

MicroStation v8.11.7.443 E-SHEET NAME: USER: tvonbehren DATE PLOTTED: January 5, 2012 FILE NAME: P:\CIVIL\471N6-2021.00\CONTRACT PLANS AND PROPOSAL\REVISIONS AFTER SUBMITTAL\R146GOMT.DGN

COUNTY OF	ITEM NO.	SHEET NO.
CAMPBELL	6-2021.00	R147

COORDINATION OF DELINEATORS THROUGH BRIDGE AREAS

PAY SPECIAL ATTENTION TO DELINEATION OF THE APPROACHES TO ALL BRIDGES TO INSURE THE GUARDRAIL DELINEATORS AND CONCRETE BARRIER WALL DELINEATORS PROVIDE A UNIFORM DELINEATED PATTERN THROUGH THE BRIDGE AREAS.

COORDINATION OF WORK

THE CONTRACTOR IS ADVISED THAT WORK ON I-275 WB WILL BE ONGOING IN 2012 AND OTHER PROJECTS MAY BE IN PROGRESS WITHIN OR IN THE NEAR VICINITY OF THIS PROJECT. THE TRAFFIC CONTROL OF THOSE PROJECTS MAY AFFECT THIS PROJECT AND THE TRAFFIC CONTROL OF THIS PROJECT MAY AFFECT THOSE PROJECTS. THE CONTRACTOR WILL COORDINATE THE WORK ON THIS PROJECT WITH THE WORK OF THE OTHER CONTRACTORS. THE DEPARTMENT MAY CALL IN DRAIN CLEANERS ON CONTRACT TO CLEAN CURB BOX INLETS AND DROP BOXES WHILE LANE CLOSURES ARE IN PLACE.

DOUBLE FINE SIGN NOTE

LOCATIONS NOT ROUTINELY PROTECTED BY A BARRIER WALL ARE ELIGIBLE FOR "DOUBLE FINE" SIGNS. A HIGHWAY ZONE WHICH HAS BARRIER WALL BUT IN WHICH UNUSUAL OR HAZARDOUS CONDITIONS EXIST WHICH EXPOSE THE WORKERS TO TRAFFIC HAZARDS SHALL ALSO BE ELIGIBLE FOR "DOUBLE FINE" SIGNS. HOWEVER, THE SIGNS SHALL ONLY BE PLACED IN PORTIONS OF WORK ZONES IN WHICH WORKERS ARE EXPOSED TO TRAFFIC HAZARDS.

THE CONTRACTOR SHALL NOTIFY THE ENGINEER A MINIMUM OF TWELVE (12) HOURS PRIOR TO USING "DOUBLE FINE" SIGNS. AT THE BEGINNING OF THE HIGHWAY WORK ZONE, THE "FINE DOUBLED IN WORK ZONE" SIGN WILL BE PLACED. AT THE END OF THE WORK ZONE THE "END DOUBLE FINE" SIGN SHALL BE PLACED. THE SIGNS SHALL BE COVERED OR REMOVED WHEN THE HIGHWAY WORK ZONE DOES NOT HAVE WORKERS FOR MORE THAN A TWO (2) HOUR PERIOD.

PAYMENT FOR THE SIGNS SHALL BE MADE AT THE UNIT BID PRICE FOR "SIGNS". THE MOVING AND COVERING OF THE SIGNS SHALL BE INCIDENTAL TO THE BID ITEM "SIGNS".

TEMPORARY RAISED PAVEMENT MARKERS

THE CONTRACTOR WILL PROVIDE WHITE OR YELLOW TEMPORARY RAISED PAVEMENT MARKERS TO MARK ALL TRAFFIC LANES, SLIP RAMPS, TAPERS AND LANE CLOSURES. SEE STANDARD DRAWINGS TTC-155-01 AND TTC-160-01 FOR MARKER ARRANGEMENTS. PAYMENT FOR TEMPORARY RAISED PAVEMENT MARKERS WHICH INCLUDES ALL THE NECESSARY MATERIALS, EQUIPMENT, AND LABOR REQUIRED TO PLACE THE TEMPORARY RAISED PAVEMENT MARKERS WILL BE PAID FOR AT THE CONTRACT UNIT PRICE OF EACH FOR PAVEMENT MARKER TY IVA-MW TEMP OR PAVEMENT MARKER TY IVA-MY TEMP. THE REMOVAL OF WHITE OR YELLOW TEMPORARY RAISED PAVEMENT MARKERS SHALL BE INCIDENTAL TO PAVEMENT MARKER TY IVA-MW TEMP OR PAVEMENT MARKER TY IVA-MY TEMP.

THE CONTRACTOR WILL PROVIDE AT ALL TIMES A RESERVE STOCKPILE OF TEMPORARY RAISED PAVEMENT MARKERS FOR THE REPLACEMENT OF DAMAGED OR MISSING TEMPORARY RAISED PAVEMENT MARKERS. NO DIRECT PAYMENT FOR THE RESERVE STOCKPILE OF TEMPORARY RAISED PAVEMENT MARKERS WILL BE ALLOWED AND THE RESERVE TEMPORARY RAISED PAVEMENT MARKERS WILL REMAIN THE PROPERTY OF THE CONTRACTOR UPON COMPLETION OF THE PROJECT.

REMOVAL OF PAVEMENT MARKINGS AND RAISED PAVEMENT MARKERS

THE CONTRACTOR WILL REMOVE ALL PAVEMENT MARKINGS AND THE LENSES OF RAISED PAVEMENT MARKERS THAT DO NOT APPLY TO THE TRAFFIC OPERATION IN USE. IN AREAS WHERE THE PAVEMENT MARKINGS WILL CONFORM TO THE FINAL MARKING SCHEME OR FOR OTHER REASONS WILL NOT BE REMOVED, PAVEMENT MARKINGS SHALL BE OF A PERMANENT TYPE PAVEMENT MARKING MATERIAL. ALL TEMPORARY PAVEMENT MARKINGS, WHICH MUST BE SUBSEQUENTLY REMOVED, SHALL BE AN APPROVED REMOVABLE STRIPING TAPE OR TEMPORARY PAINT. REMOVABLE STRIPING TAPE-WHITE, REMOVABLE STRIPING TAPE-YELLOW OR REMOVABLE STRIPING TAPE-BLACK WILL BE MEASURED IN LINEAR FEET FOR PAYMENT AT THEIR RESPECTIVE CONTRACT UNIT PRICE. ESTIMATED QUANTITIES FOR TEMPORARY PAINT AND REMOVABLE STRIPING ARE INCLUDED AS BID ITEMS.

PAVEMENT MARKINGS, OTHER THAN TEMPORARY TAPE, ON EXISTING OR TEMPORARY PAVEMENTS WHICH WILL BE REMOVED LATER SHALL BE REMOVED BY WATERBLASTING. WATERBLASTING WILL BE PAID FOR BY BID ITEM NO. 23237EN10W "WATERBLAST STRIP REMOVAL". AN ESTIMATED QUANTITY FOR WATERBLASTING IS INCLUDED IN THE PLANS. PAINTING OF EXISTING PAVEMENT MARKINGS WITH ASPHALT OR OTHER MATERIALS TO OBLITERATE THE PAVEMENT MARKINGS WILL NOT BE ALLOWED. REMOVAL OF TEMPORARY TAPE SHALL BE INCIDENTAL TO THE MAINTAIN AND CONTROL TRAFFIC BID ITEM.

PLACE TEMPORARY AND PERMANENT STRIPING IN ACCORDANCE WITH SECTION 112, EXCEPT THAT:

1. TEMPORARY AND PERMANENT STRIPING WILL BE SIX (6) INCHES WIDE
2. EDGE LINES WILL BE REQUIRED FOR TEMPORARY STRIPING
3. EXISTING, TEMPORARY, OR PERMANENT STRIPING WILL BE IN PLACE BEFORE A LANE IS OPENED TO TRAFFIC.
4. PERMANENT STRIPING WILL BE DURABLE WATERBORNE MARKING.

BARRICADES

BARRICADES USED IN LIEU OF BARRELS AND CONES FOR CHANNELIZATION OR DELINEATION WILL BE INCIDENTAL TO MAINTAIN AND CONTROL TRAFFIC ACCORDING TO SECTION 112.04.01. BARRICADES USED TO PROTECT PAVEMENT REMOVAL AREAS WILL BE BID AS EACH ACCORDING TO SECTION 112.04.04. INDIVIDUAL BARRICADES WILL BE MEASURED ONLY ONCE FOR PAYMENT, REGARDLESS OF THE NUMBER OF TIMES THEY ARE SET, RESET, REMOVED AND RELOCATED WITHIN THE DURATION OF THE PROJECT. REPLACEMENTS FOR DAMAGED BARRICADES OR BARRICADES DIRECTED TO BE REPLACED BY THE ENGINEER DUE TO POOR CONDITION OR REFLECTIVITY WILL NOT BE MEASURED FOR PAYMENT.

DRAINAGE BOX GRATES

THE CONTRACTOR SHALL PROVIDE PROTECTION FOR DRAINAGE BOX GRATES AS DIRECTED BY THE ENGINEER. THE DESIGN FOR PROTECTING THE GRATES SHALL BE SUBMITTED TO AND APPROVED BY THE ENGINEER BEFORE INSTALLATION. PAYMENT FOR THE PROTECTION OF DRAINAGE BOX GRATES WILL BE INCIDENTAL TO MAINTAIN AND CONTROL TRAFFIC.

PAVEMENT EDGE DROP-OFF

PAVEMENT EDGES THAT TRAFFIC IS NOT EXPECTED TO CROSS, EXCEPT ACCIDENTALLY, SHALL BE TREATED AS FOLLOWS:

LESS THAN 2 INCHES - NO PROTECTION REQUIRED. WARNING SIGNS SHOULD BE PLACED IN ADVANCE AND THROUGHOUT THE DROP-OFF AREA.

2 INCHES TO 4 INCHES - PLACE PLASTIC DRUMS, VERTICAL PANELS OR BARRICADES EVERY 100 FEET ON TANGENT SECTIONS FOR SPEEDS OF 45 MPH OR GREATER. CONES MAY BE USED IN PLACE OF PLASTIC DRUMS, VERTICAL PANELS OR BARRICADES DURING DAYLIGHT HOURS. FOR TANGENT SECTIONS WITH SPEEDS LESS THAN 45 MPH AND FOR CURVES, PLASTIC DRUMS, VERTICAL PANELS OR BARRICADES SHOULD BE PLACED EVERY 50 FEET. SPACING FOR TAPERS SHOULD BE IN ACCORDANCE WITH THE MANUAL ON UNIFORM TRAFFIC CONTROL DEVICES (MUTCD), CURRENT VERSION.

GREATER THAN 4 INCHES - POSITIVE SEPARATION OR WEDGE WITH 3:1 OR FLATTER SLOPE IS REQUIRED. IF THERE IS 8 FEET OR MORE DISTANCE BETWEEN THE EDGE OF PAVEMENT AND DROP-OFF, PLASTIC DRUMS, VERTICAL PANELS OR BARRICADES CAN BE USED. IF CONCRETE BARRIERS ARE USED, SPECIAL REFLECTIVE DEVICES SHOULD BE USED FOR OVERNIGHT INSTALLATIONS.

CONSTRUCTION AND REMOVAL OF TEMPORARY ROADWAYS

ALL TEMPORARY ASPHALT PAVEMENT, CSB SHOULDER AND SLIP RAMPS REQUIRED FOR MAINTENANCE OF TRAFFIC AS SHOWN IN THE MAINTENANCE OF TRAFFIC PLAN AND/OR AS SPECIFIED OR DIRECTED AND APPROVED BY THE ENGINEER WILL BE CONSIDERED TEMPORARY ROADWAYS AND PAID FOR AS FOLLOWS:

PAYMENT FOR EMBANKMENT IN PLACE, ROADWAY EXCAVATION, GRADING AND DRAINAGE OF EXISTING AND TEMPORARY ROADWAYS, INCLUDING SLIP RAMPS, WILL BE INCIDENTAL TO THE CONTRACT UNIT PRICE FOR MAINTAIN AND CONTROL TRAFFIC AND TO THE TYPES OF SURFACING MATERIALS FOR TEMPORARY ASPHALT PAVEMENT. CULVERT PIPE AND DRAINAGE STRUCTURES REQUIRED FOR THE EXISTING AND TEMPORARY ROADWAYS WILL REMAIN THE PROPERTY OF THE CONTRACTOR UPON COMPLETION OF THE PROJECT. TEMPORARY ASPHALT PAVEMENT AND CSB SHOULDER WILL BE MEASURED AND PAID FOR AT THE CONTRACT UNIT PRICE OF THE TYPE OF SURFACING MATERIAL.

WHEN THE CONTRACTOR REMOVES TEMPORARY ASPHALT PAVEMENT, CSB SHOULDER OR A SLIP RAMP, THE CONTRACTOR WILL RESTORE THE AREA OF THE TEMPORARY ROADWAY TO ITS ORIGINAL CONDITION PRIOR TO CONSTRUCTION. THE WORK NECESSARY TO RESTORE THE AREA OF THE TEMPORARY ROADWAY WILL INCLUDE BUT IS NOT LIMITED TO THE REMOVAL OF EMBANKMENT IN PLACE, ALL SURFACING MATERIALS, CULVERT PIPE, AND DRAINAGE STRUCTURES. RESTORATION WORK WILL ALSO INCLUDE GRADING TO THE ORIGINAL SECTION FOR PROPER DRAINAGE OF THE AREA, SEEDING AND PROTECTION IN ACCORDANCE WITH THE STANDARD SPECIFICATIONS AND THE REMOVAL OF DEBRIS WHICH IS A RESULT OF THE TEMPORARY ROADWAY. ALL RESTORATION WORK WILL MEET WITH THE SATISFACTION OF THE ENGINEER.

NO DIRECT PAYMENT WILL BE ALLOWED FOR REMOVAL OF A TEMPORARY ROADWAY OR FOR RESTORATION WORK. ALL WORK REQUIRED AS A RESULT OF THE REMOVAL OF THE TEMPORARY ROADWAY WILL BE INCIDENTAL TO MAINTAIN AND CONTROL TRAFFIC AND THE TYPE OF SURFACING MATERIALS FOR TEMPORARY ASPHALT PAVEMENT AND DGA SHOULDER.

Preliminary Plans

MAINTENANCE OF TRAFFIC NOTES

FILE NAME: P:\CIVIL\147\N6-2021.00\CONTRACT PLANS AND PROPOSAL\CONTRACT PLAN SET\ROADWAY\R147GOMT.DGN
USER: tvonbehren
DATE PLOTTED: January 2, 2012
E-SHEET NAME:
MicroStation v8.11.7.443

COUNTY OF	ITEM NO.	SHEET NO.
CAMPBELL	6-2021.00	R148

MAINTENANCE OF TRAFFIC NOTES FOR WORK IN OHIO

ALL CONSTRUCTION ACTIVITIES IN OHIO WILL BE PERFORMED WITH THE APPROVAL OF ODOT PERSONNEL AND SHALL MEET ODOT DESIGN STANDARDS AND THE STANDARDS OF THE OHIO MANUAL ON UNIFORM TRAFFIC CONTROL DEVICES (OMUTCD).

THE CONTRACTOR IS TO CONTACT OHIO DEPARTMENT OF TRANSPORTATION (ODOT) AND THE CITY OF CINCINNATI A MINIMUM OF 30 DAYS PRIOR TO ANY LANE CLOSURES OR OTHER CONSTRUCTION ACTIVITY IN OHIO.

LANE CLOSURES IN OHIO WILL ONLY BE PERMITTED DURING MAINTENANCE OF TRAFFIC PHASES 2 AND 3 WHEN THE ACCELERATED CONSTRUCTION WORK ON I-471 SOUTHBOUND FROM THE 6TH STREET BRIDGE TO THE NORTH END OF THE PROJECT IS BEING PERFORMED. SHORT TERM LANE CLOSURES DURING OFF-PEAK HOURS MAY BE PERMITTED AT OTHER TIMES WITH THE APPROVAL OF THE ENGINEER. OFF-PEAK HOURS ARE FROM 9 PM TO 6 AM EACH NIGHT OR ANY OTHER TIME APPROVED BY THE ENGINEER AND THE CITY OF CINCINNATI.

SEE SHEET R149 FOR A MAP OF THE RAMP/LANE CLOSURES IN OHIO.

LANE CLOSURES / RAMP CLOSURES

ON THE TWO LANE I-471 SOUTHBOUND ENTRANCE RAMP FROM EASTBOUND FORT WASHINGTON WAY (US 50), REDUCE TRAFFIC TO ONE LANE. THE LANE CLOSURE IS TO OCCUR ON FORT WASHINGTON WAY PRIOR TO THE BEGINNING OF THE ENTRANCE RAMP TO I-471 SOUTHBOUND.

CLOSE THE I-471 SOUTHBOUND ENTRANCE RAMP FROM WESTBOUND COLUMBIA PARKWAY / EAST 5TH STREET. THE CLOSURE FROM EAST 5TH STREET WILL BE A CENTER LANE CLOSURE. THE CONTRACTOR IS TO PROVIDE A DRAWING OF THE PROPOSED MAINTENANCE OF TRAFFIC PLAN FOR THIS CLOSURE AT LEAST 30 DAYS PRIOR TO THE PROPOSED CLOSURE TO THE ENGINEER, THE CITY OF CINCINNATI AND THE OHIO DEPARTMENT OF TRANSPORTATION FOR THEIR REVIEW AND APPROVAL.

CLOSE THE I-471 SOUTHBOUND ENTRANCE RAMP FROM LIBERTY STREET, AS WELL AS THE RAMP ACCESS LANES FROM LIBERTY STREET AND READING ROAD, FROM 4 PM TO 6 PM EACH WEEKDAY. THE RAMP IS TO REMAIN OPEN ALL OTHER TIMES.

PORTABLE CHANGEABLE MESSAGE SIGNS

INSTALL PORTABLE CHANGEABLE MESSAGE SIGNS (PCMS) 7-10 DAYS BEFORE CLOSURE AT THE LOCATIONS AND WITH THE MESSAGES SHOWN BELOW:

1. AT THE ONE LANE SECTION OF THE RAMP FROM 5TH STREET/US 50 WB TO I-471 SB WITH "CLOSED "DATE"/45 DAY CLOSURE" OR SIMILAR.
2. AT THE LIBERTY STREET RAMP TO I-471 SB WITH "CLOSED STARTING "DATE"/ MON - FRI 4PM - 6PM". ONCE THE CLOSURE STARTS ITS DAILY ROUTINE OF CLOSING EVERY WEEKDAY FROM 4 PM TO 6 PM, CHANGE THE MESSAGE TO "CLOSED MON-FRI 4 PM - 6 PM" AND OPERATE ON A CONTIUNOUS UNTIL THE CLOSURE IS NO LONGER REQUIRED.

COVERING EXISTING SIGNS

SIGNS TO BE COVERED DURING RAMP CLOSURES WITH ORANGE DIAGONAL CLOSED MARKER INCLUDE:

1. EASTBOUNB 5TH STREET
2. WESTBOUND COLUMBIA PARKWAY (2 LOCATIONS)
3. LIBERTY STREET - 3 LOCATIONS (EB LIBERTY), (SB READING), (NB READING - GROUND MOUNTED)
   THE CONTRACTOR IS TO PLACE A BLACK ON ORANGE FLAT SHEET SIGN WITH HIGH LEVEL SAFETY FLAGS ON BOTH SIDES OF THE RAMP FROM LIBERTY ST. TO I-471 SOUTHBOUND READING "RAMP CLOSED MONDAY THRU FRIDAY 4 PM TO 6 PM". USE THE APPROPRIATE SIZE LETTERING PER THE OMUTCD.
4. EASTBOUND FORT WASHINGTON WAY (US 50) 2 LOCATIONS - OVERHEAD SIGNS WILL NEED TO HAVE THE YELLOW PORTION OF THE SIGN (EXIT ONLY WITH ARROW) COVERED .

ADDITIONAL NOTES

THE CONTRACTOR WILL BE RESPONSIBLE FOR INSTALLING THE DETOUR SIGNING/TRAILBLAZING INCLUDING INSTALLING TYPE III BARRICADES WITH ROAD CLOSED SIGNS PER ODOT STANDARD CONSTRUCTION DRAWING MT101.60 ACROSS THE AFFECTED RAMPS, MODIFYING ANY EXISTING SIGNING IDENTIFIED BY THE CITY WHICH NEEDS ADJUSTING, ETC. THE DETOUR TRAILBLAZING SIGNING FOR THE LIBERTY ST. RAMP CLOSURE CAN REMAIN IN PLACE 24/7 EVEN THOUGH THE RAMP WILL ONLY BE CLOSED 2 HOURS A DAY DURING THE WEEK.

THE CITY OF CINCINNATI WILL PROVIDE THE DETOUR ROUTES FOR THE VARIOUS RAMP CLOSURES IN OHIO. THE CONTRACTOR IS TO PROVIDE THE ENGINEER AND THE CITY OF CINCINNATI NOTICE OF PROPOSED RAMP CLOSURES AT LEAST 30 DAYS PRIOR TO THE PROPOSED CLOSURES. THE CITY WILL THEN PROVIDE THE DETOUR ROUTE TO BE SIGNED BY THE CONTRACTOR.

Preliminary Plans

MAINTENANCE OF TRAFFIC NOTES
OHIO WORK

MicroStation v8.11.7.443
E-SHEET NAME:
USER: jnapier
DATE PLOTTED: January 5, 2012
FILE NAME: P:\CIVIL\471\6-2021.00\CONTRACT PLANS AND PROPOSAL\REVISIONS AFTER SUBMITTAL\R148OMT.DGN

COUNTY OF	ITEM NO.	SHEET NO.
CAMPBELL	6-2021.00	R149

OHIO RAMP/LANE CLOSURE MAP

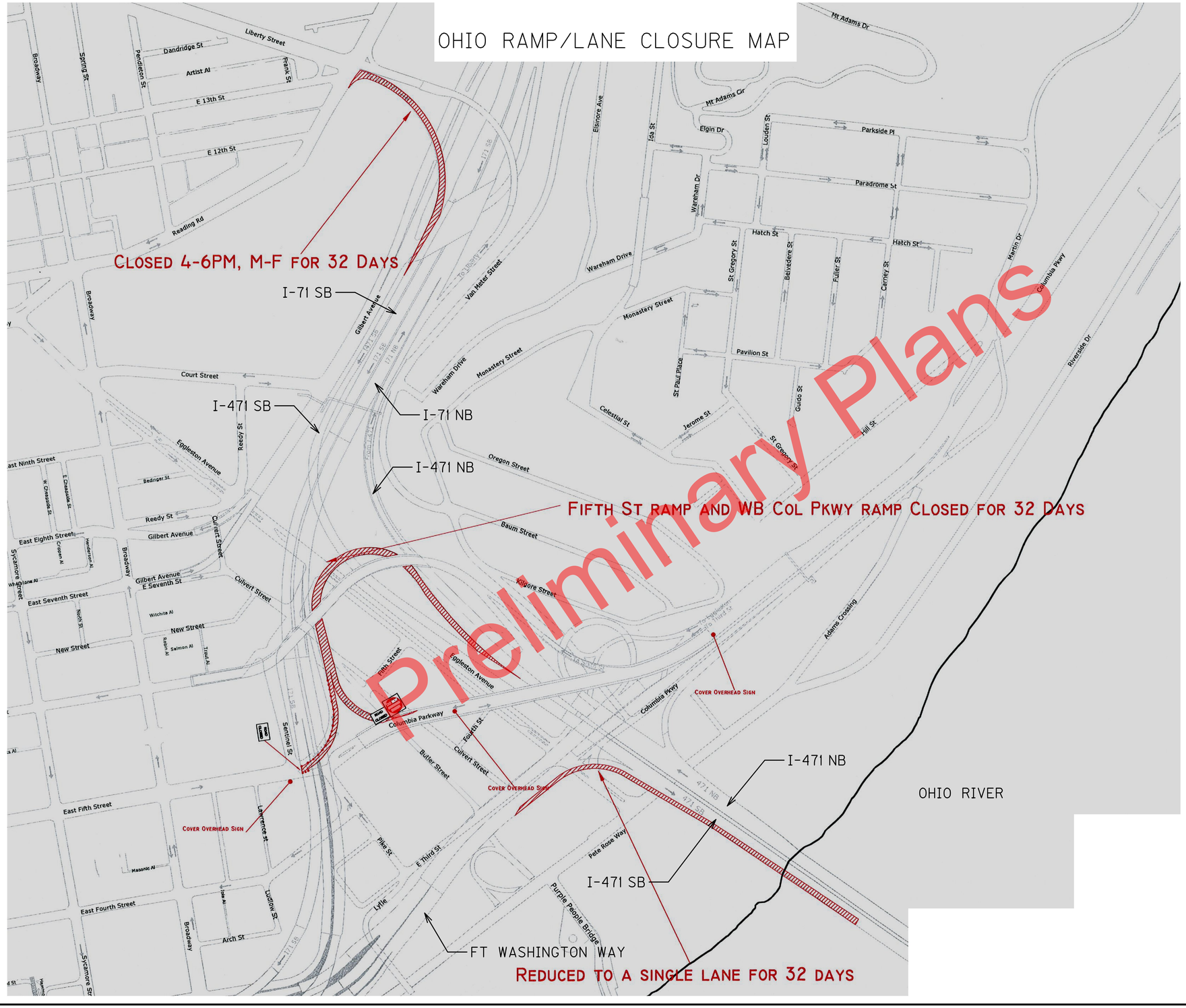

Preliminary Plans

MAINTENANCE OF TRAFFIC NOTES

OHIO WORK

MicroStation v8.11.7.443 | E-SHEET NAME: | USER: tvonbehren DATE PLOTTED: January 2, 2012 | FILE NAME: P:\CIVIL\147\6-2021.00\CONTRACT PLANS AND PROPOSAL\CONTRACT PLAN SET\ROADWAY\R149OOMT.DGN

COUNTY OF	ITEM NO.	SHEET NO.
CAMPBELL	6-2021.00	R150

SLIP RAMP STRIPING DETAIL

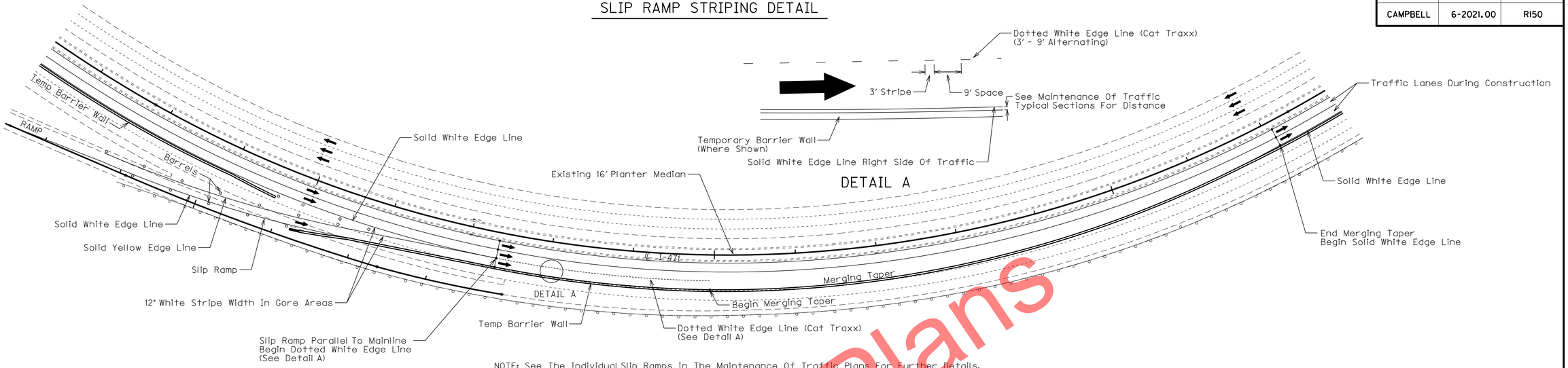

DETAIL A

NOTE: See The Individual Slip Ramps In The Maintenance Of Traffic Plans For Further Details.

TEMPORARY CONSTRUCTION GAP DETAIL ①

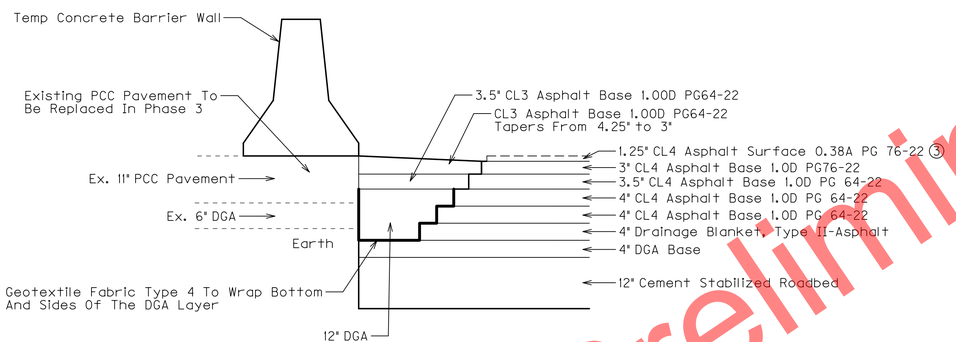

ASPHALT ALTERNATE

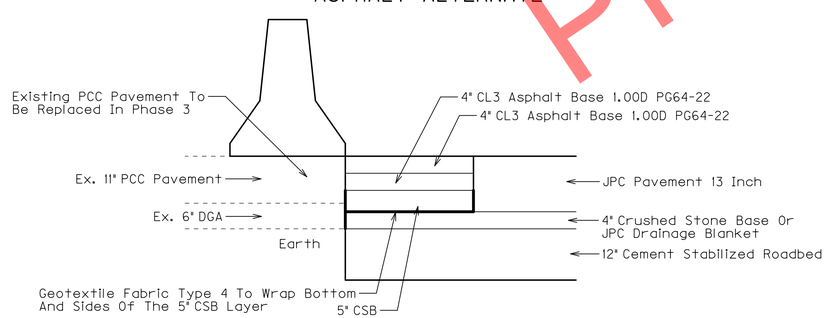

JPC ALTERNATE

Note: The Temporary Construction Gap Detail Is To Be Used In Phase 3 Where Slip Ramp Traffic Will Be Crossing The Temporary Construction Gap Between The Existing And Proposed Pavements Left During Phase 2 Construction. See The Paving Summary For An Estimate Of Quantities. The Asphalt, CSB or DGA Base, and Geotextile Fabric Is To Be Removed When The Ramp Is Closed And The Permanent Pavement Constructed. Removal Will Be Incidental To The Bid Items.

PHASE 2 CONSTRUCTION DETAIL ①

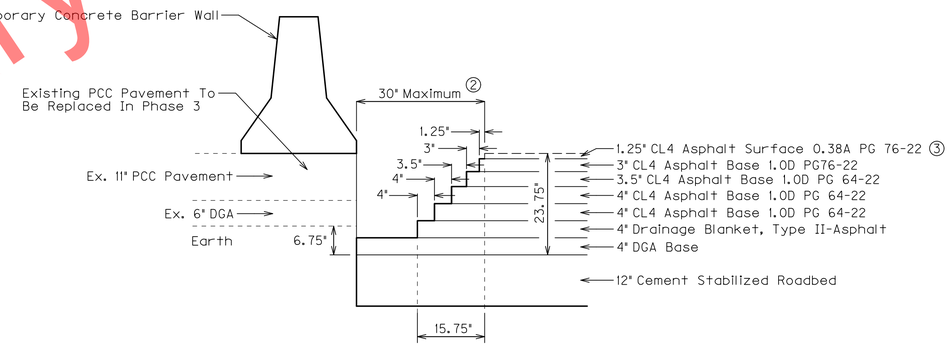

ASPHALT ALTERNATE

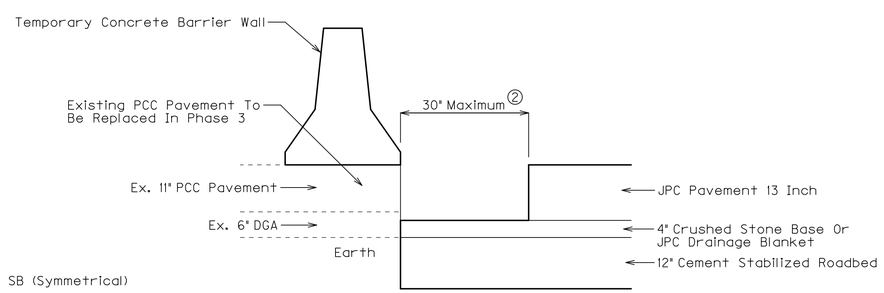

JPC ALTERNATE

① I-471 NB or SB (Symmetrical)

② Maximum Width Shown. Narrower Widths Required For Some Areas. See Maintenance Of Traffic Plans And Typicals For Details.

③ Surface Course Not Installed Until End Of Phase 3.

MAINTENANCE OF TRAFFIC
DETAILS

Preliminary Plans

MicroStation v8.11.7.443
E-SHEET NAME:
USER: tvonbehren
DATE PLOTTED: January 2, 2012
FILE NAME: P:\CIVIL\147\6-2021.00\CONTRACT PLANS AND PROPOSAL\CONTRACT PLAN SET\ROADWAY\R150OOMT.DGN

COUNTY OF	ITEM NO.	SHEET NO.
CAMPBELL	6-2021.00	R151

I–471 MAINTENANCE OF TRAFFIC TYPICAL SECTIONS

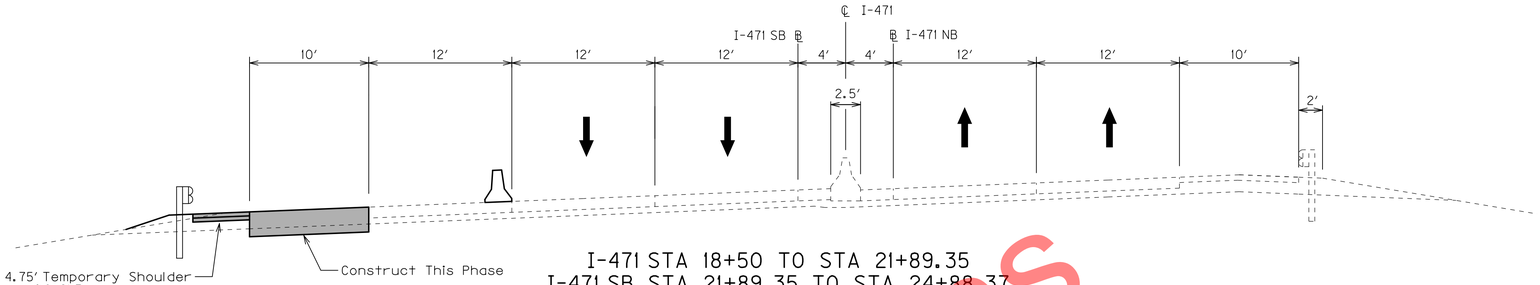

Sta 18+50 I-471 to Sta 28+30 I-471 SB Construct 4.75′ Temporary Shoulder Widening W/2′ DGA Shoulder Using 2 - 4 Inch Layers Of CL3 Asphalt Base 1.00D PG64-22. Shoulder Widening To Be Removed When No longer Needed for Maintenance Of Traffic.

I-471 STA 18+50 TO STA 21+89.35
I-471 SB STA 21+89.35 TO STA 24+88.37
I-471 NB STA 21+89.35 TO STA 27+46
PHASE 1

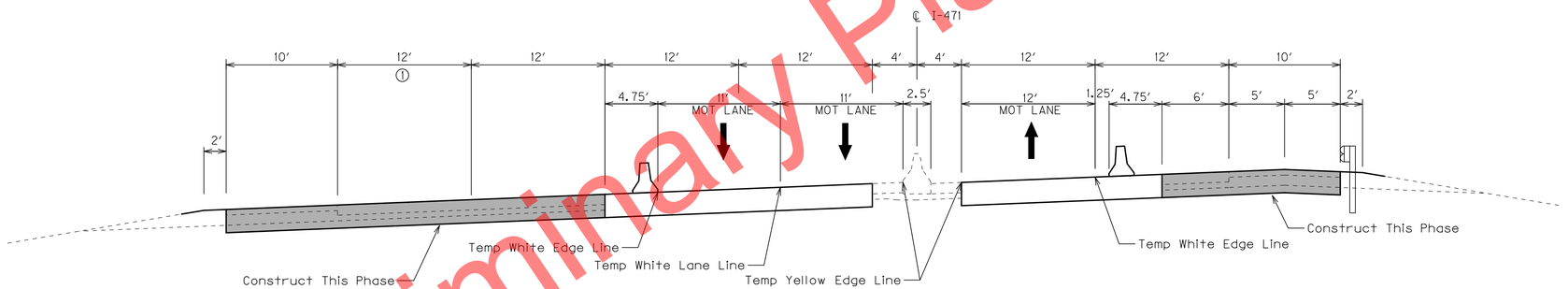

I-471 BEGIN PROJECT TO STA 18+50
PHASE 3

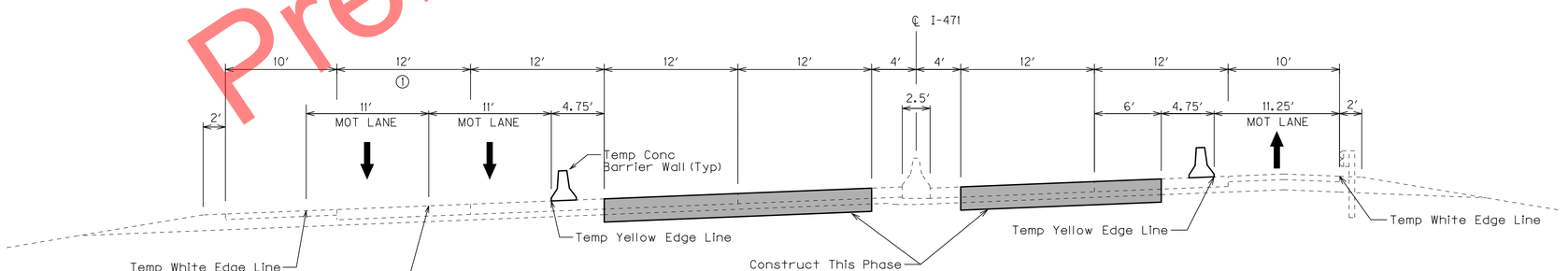

I-471 BEGIN PROJECT TO STA 18+50
PHASE 2

① Tapers From 12′ At Sta 16+49.5 To 0′ At Sta 18+50

MAINTENANCE OF TRAFFIC
TYPICAL SECTIONS

Preliminary Plans

MicroStation v8.11.7.443
E-SHEET NAME:
USER: tvonbehren
DATE PLOTTED: January 2, 2012
FILE NAME: P:\CIVIL\471\6-2021.00\CONTRACT PLANS AND PROPOSAL\CONTRACT PLAN SET\ROADWAY\R150OMT.DGN

COUNTY OF	ITEM NO.	SHEET NO.
CAMPBELL	6-2021.00	R152

I-471 MAINTENANCE OF TRAFFIC TYPICAL SECTIONS

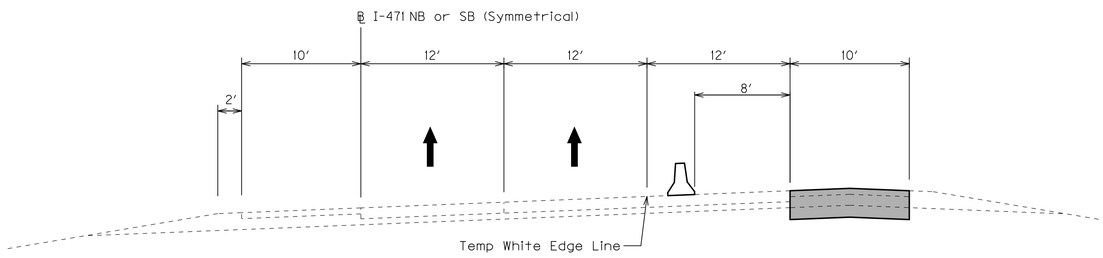

I-471 SB STA 28+30 TO STA 47+08
I-471 SB STA 63+02 TO STA 89+35.92
I-471 NB STA 75+00 TO STA 89+35.92
(EXISTING 3 LANE I-471 NB OR SB SECTION)
PHASE 1

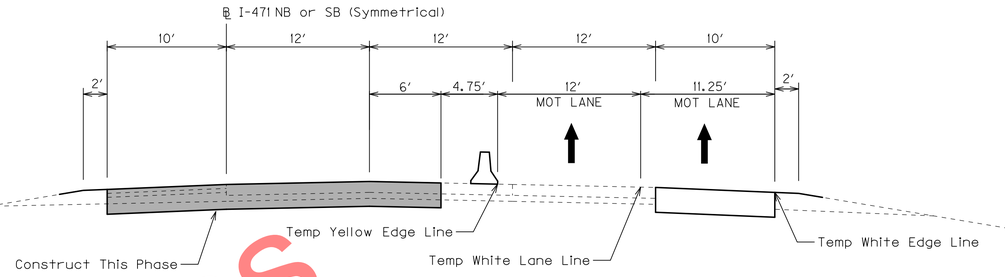

I-471 SB STA 28+30 TO STA 47+08
I-471 SB STA 63+02 TO STA 89+35.92
I-471 NB STA 75+00 TO STA 89+35.92
(EXISTING 3 LANE I-471 NB OR SB SECTION)
PHASE 2

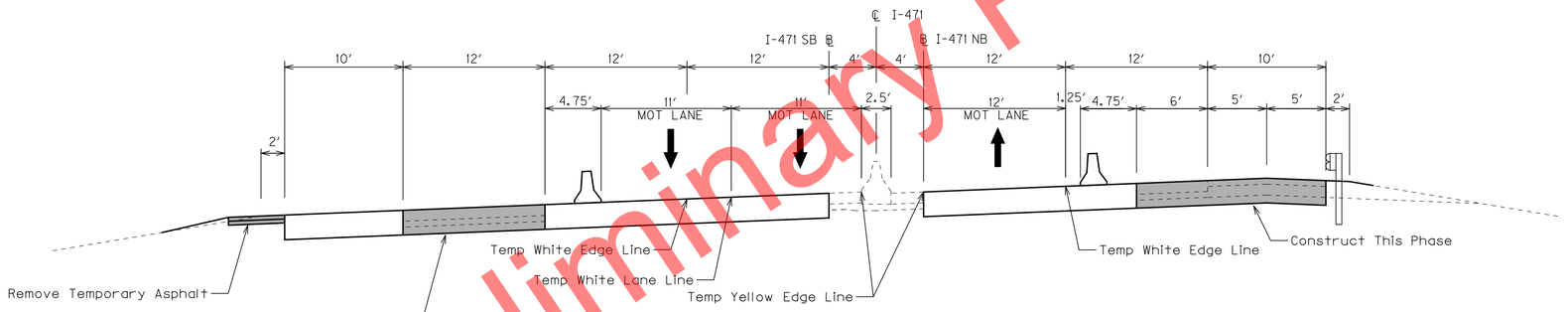

I-471 STA 18+50 TO STA 21+89.35
I-471 SB STA 21+89.35 TO STA 24+88.37
I-471 NB STA 21+89.35 TO STA 27+46
PHASE 3

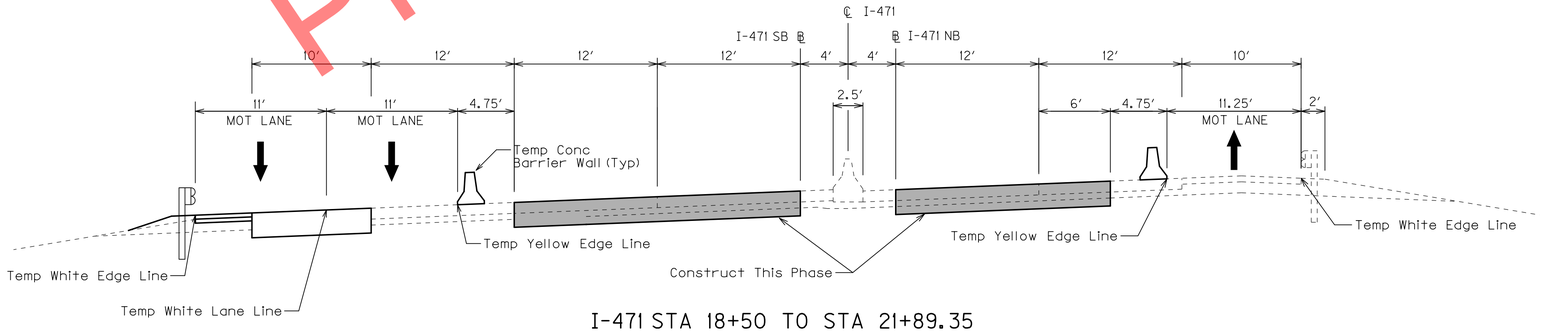

I-471 STA 18+50 TO STA 21+89.35
I-471 SB STA 21+89.35 TO STA 24+88.37
I-471 NB STA 21+89.35 TO STA 27+46
PHASE 2

Preliminary Plans

MAINTENANCE OF TRAFFIC
TYPICAL SECTIONS

MicroStation v8.11.7.443
E-SHEET NAME:
USER: tvonbehren
DATE PLOTTED: January 2, 2012
FILE NAME: P:\CIVIL\471N\6-2021.00\CONTRACT PLANS AND PROPOSAL\CONTRACT PLAN SET\ROADWAY\R1520MT.DGN

COUNTY OF	ITEM NO.	SHEET NO.
CAMPBELL	6-2021.00	R153

I-471 MAINTENANCE OF TRAFFIC TYPICAL SECTIONS

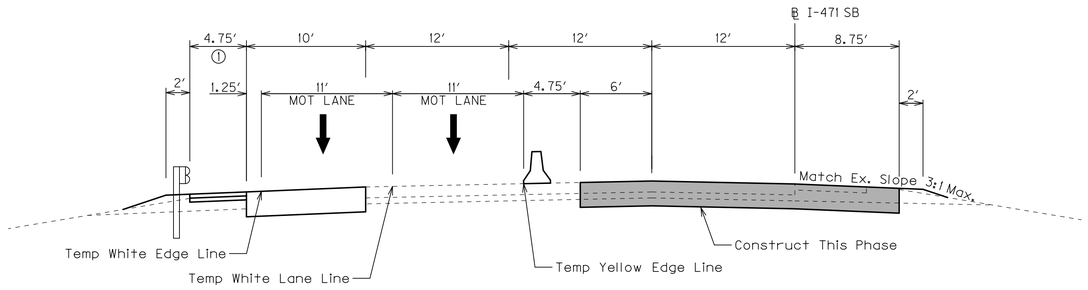

I-471 SB STA 24+65.7 TO STA 28+30
(EXISTING 3 LANE I-471 SB SECTION)
PHASE 2

① Temporary Shoulder Widening Constructed During Phase 1 To Be Used For Shifting MOT Lanes To Maintenance Of Traffic Typical Section South Of This Location. See Maintenance Of Traffic Plan Phase 2 For Lane Shift Details.

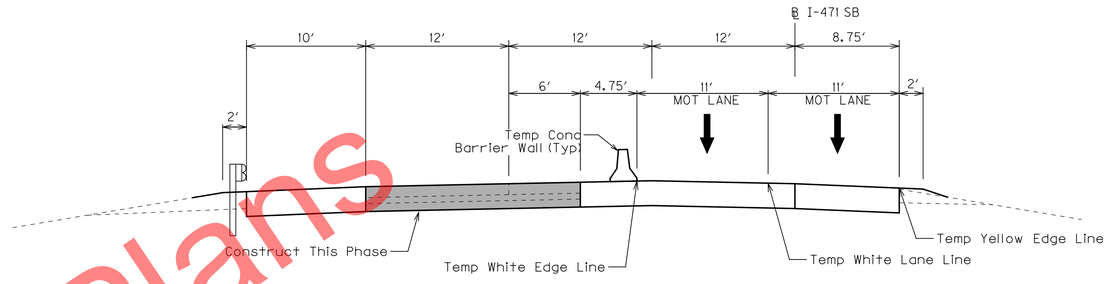

I-471 SB STA 24+65.7 TO STA 28+30
(EXISTING 3 LANE I-471 SB SECTION)
PHASE 3

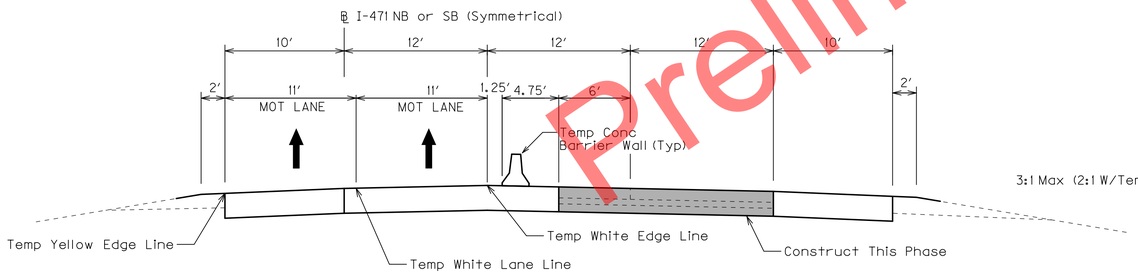

I-471 SB STA 28+30 TO STA 47+08
I-471 SB STA 63+02 TO STA 89+35.92
I-471 NB STA 75+00 TO STA 89+35.92
(EXISTING 3 LANE I-471 NB OR SB SECTION)
PHASE 3

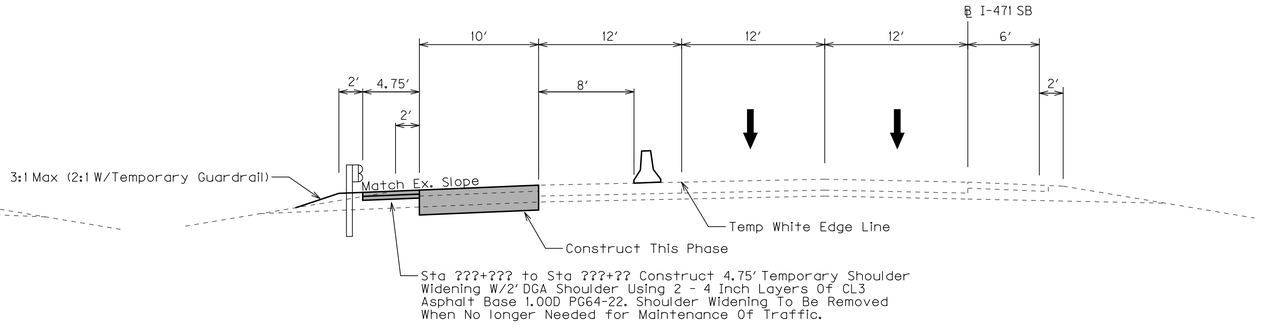

I-471 SB STA 24+65.7 TO STA 28+30
(EXISTING 3 LANE I-471 SB SECTION)
PHASE 1

MAINTENANCE OF TRAFFIC
TYPICAL SECTIONS

Preliminary Plans

FILE NAME: P:\CIVIL\147IN6-2021.00\CONTRACT PLANS AND PROPOSAL\CONTRACT PLAN SET\ROADWAY\R153OMT.DGN
USER: tvonbehren
DATE PLOTTED: January 2, 2012
E-SHEET NAME:
MicroStation v8.11.7.443

COUNTY OF	ITEM NO.	SHEET NO.
CAMPBELL	6-2021.00	R154

I-471 MAINTENANCE OF TRAFFIC TYPICAL SECTIONS

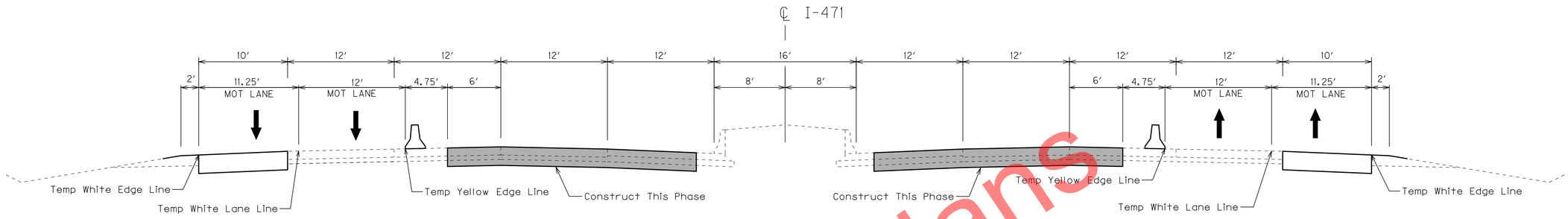

I-275 TO US 27 &
GRAND AVE TO KY 1120 (MEMORIAL PARKWAY)
PHASE 2

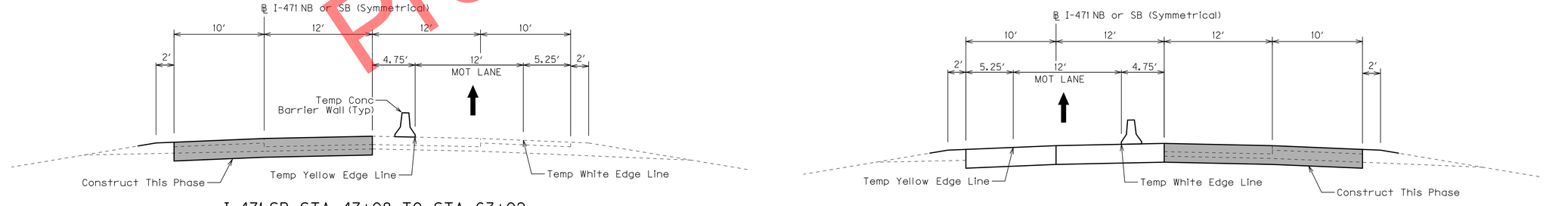

I-275 TO US 27 &
GRAND AVE TO KY 1120 (MEMORIAL PARKWAY)
PHASE 1

I-471 SB STA 47+08 TO STA 63+02
I-471 NB STA 27+46 TO STA 75+00
(EXISTING 2 LANE I-471 NB OR SB SECTION)
PHASE 2

I-471 SB STA 47+08 TO STA 63+02
I-471 NB STA 27+46 TO STA 75+00
(EXISTING 2 LANE I-471 NB OR SB SECTION)
PHASE 3

Preliminary Plans

MAINTENANCE OF TRAFFIC
TYPICAL SECTIONS

MicroStation v8.11.7.443
E-SHEET NAME:
USER: tvonbehren
DATE PLOTTED: January 2, 2012
FILE NAME: P:\CIVIL\471\N6-2021.00\CONTRACT PLANS AND PROPOSAL\CONTRACT PLAN SET\ROADWAY\R154OMT.DGN

COUNTY OF	ITEM NO.	SHEET NO.
CAMPBELL	6-2021.00	R155

I–471 MAINTENANCE OF TRAFFIC TYPICAL SECTIONS

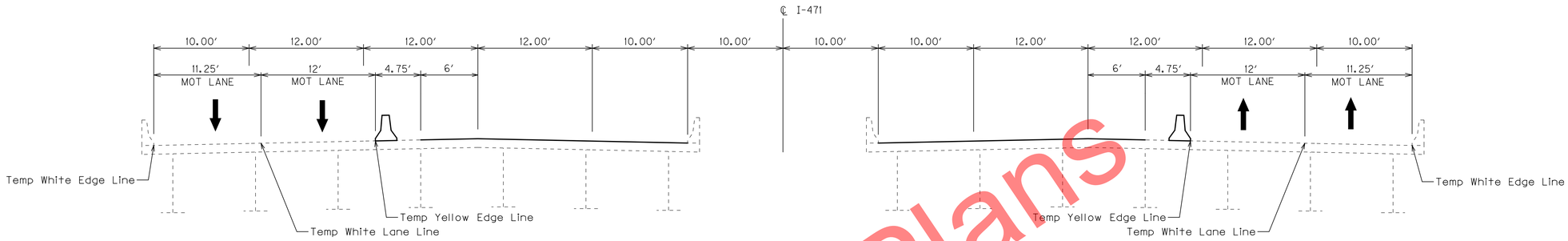

I-471 TWIN BRIDGES OVER US 27
PHASE 2

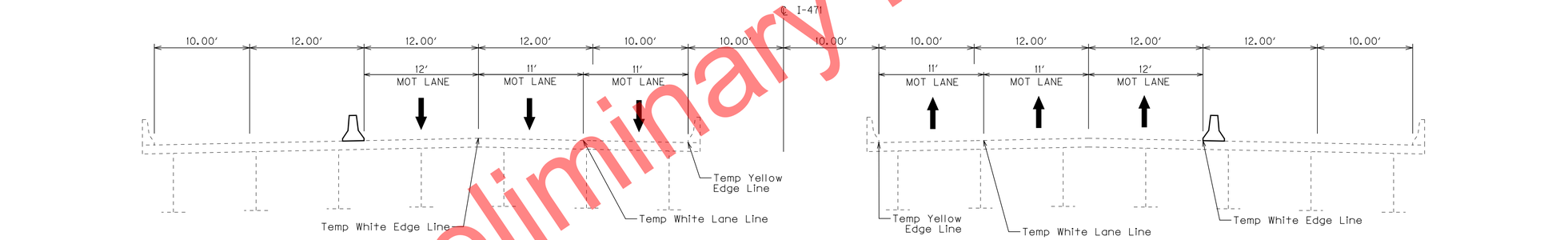

I-471 TWIN BRIDGES OVER US 27
PHASE 1

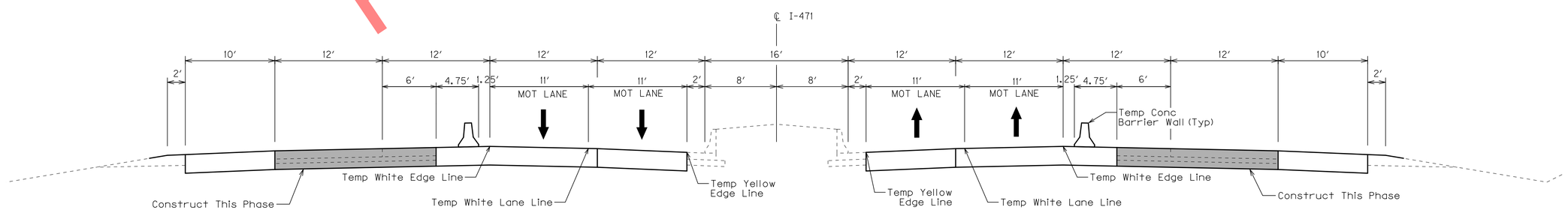

I-275 TO US 27 &
GRAND AVE TO KY 1120 (MEMORIAL PARKWAY)
PHASE 3

MAINTENANCE OF TRAFFIC
TYPICAL SECTIONS

Preliminary Plans

FILE NAME: P:\CIVIL\471\6-2021.00\CONTRACT PLANS AND PROPOSAL\CONTRACT PLAN SET\ROADWAY\R155OMT.DGN
USER: tvonbehren
DATE PLOTTED: January 2, 2012
E-SHEET NAME:
MicroStation v8.11.7.443

COUNTY OF	ITEM NO.	SHEET NO.
CAMPBELL	6-2021.00	R156

I-471 MAINTENANCE OF TRAFFIC TYPICAL SECTIONS

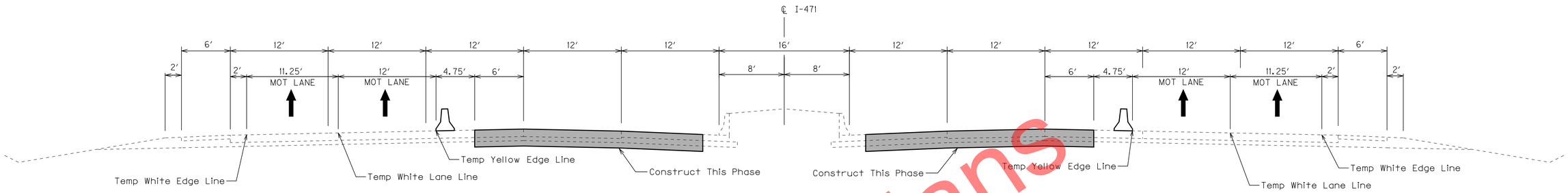

US 27 TO GRAND AVE
PHASE 2

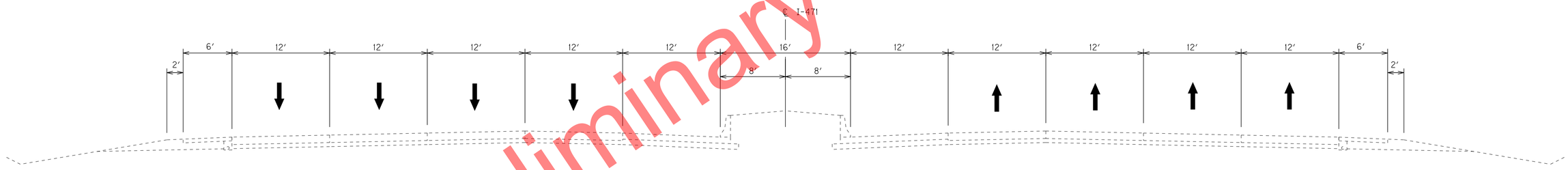

US 27 TO GRAND AVE
PHASE 1

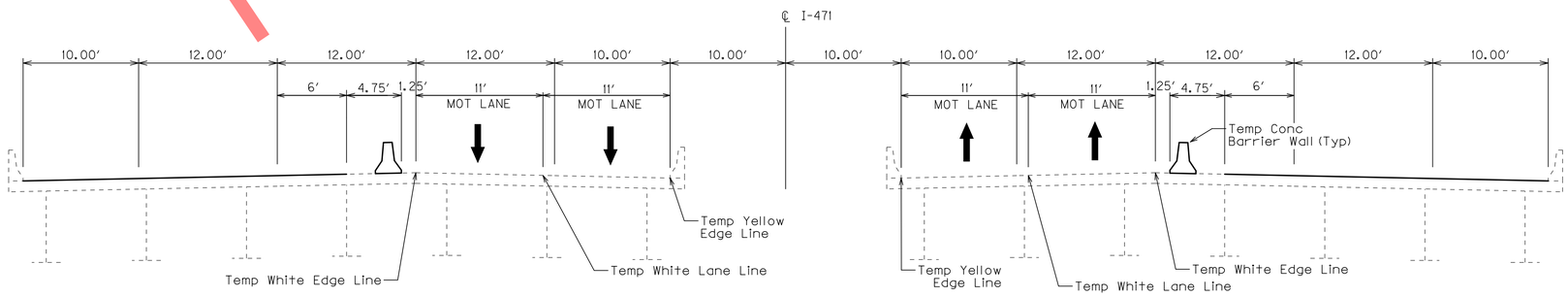

I-471 TWIN BRIDGES OVER US 27
PHASE 3

MAINTENANCE OF TRAFFIC
TYPICAL SECTIONS

Preliminary

MicroStation v8.11.7.443
E-SHEET NAME:
USER: tvonbehren
DATE PLOTTED: January 2, 2012
FILE NAME: P:\CIVIL\471\6-2021.00\CONTRACT PLANS AND PROPOSAL\CONTRACT PLAN SET\ROADWAY\R156OMT.DGN

COUNTY OF	ITEM NO.	SHEET NO.
CAMPBELL	6-2021.00	R157

I–471 MAINTENANCE OF TRAFFIC TYPICAL SECTIONS

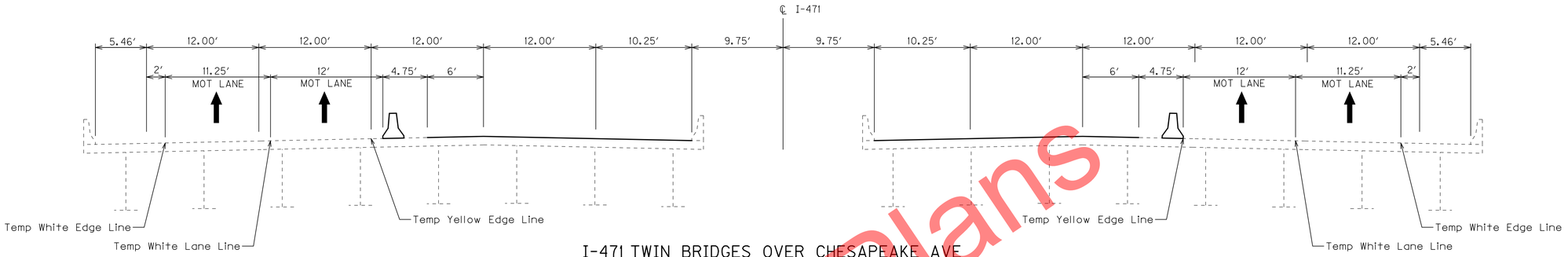

I-471 TWIN BRIDGES OVER CHESAPEAKE AVE
PHASE 2

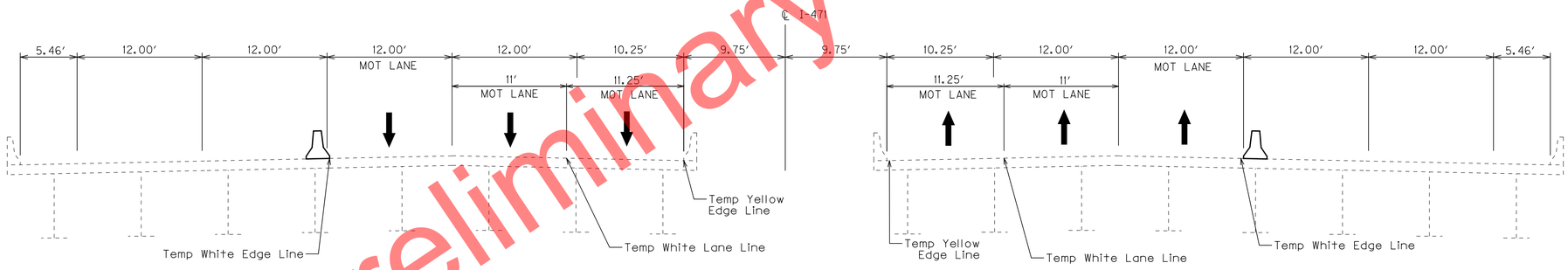

I-471 TWIN BRIDGES OVER CHESAPEAKE AVE
PHASE 1

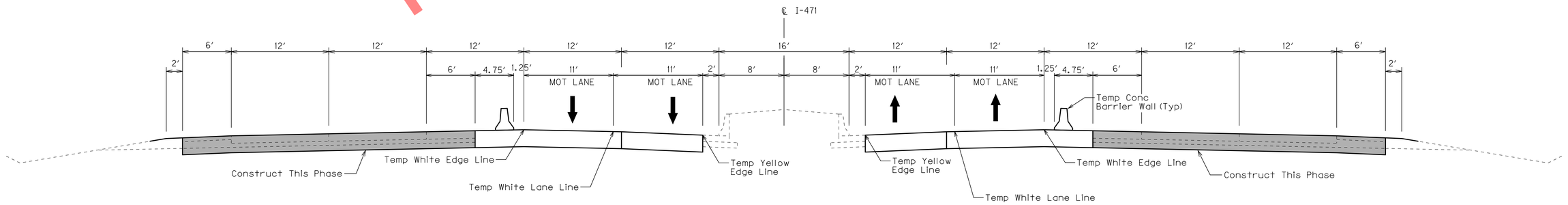

US 27 TO GRAND AVE
PHASE 3

MAINTENANCE OF TRAFFIC
TYPICAL SECTIONS

Preliminary Plans

MicroStation v8.11.7.443
E-SHEET NAME:
USER: tvonbehren
DATE PLOTTED: January 2, 2012
FILE NAME: P:\CIVIL\147\N6-2021.00\CONTRACT PLANS AND PROPOSAL\CONTRACT PLAN SET\ROADWAY\R157OMT.DGN

COUNTY OF	ITEM NO.	SHEET NO.
CAMPBELL	6-2021.00	R158

I–471 MAINTENANCE OF TRAFFIC TYPICAL SECTIONS

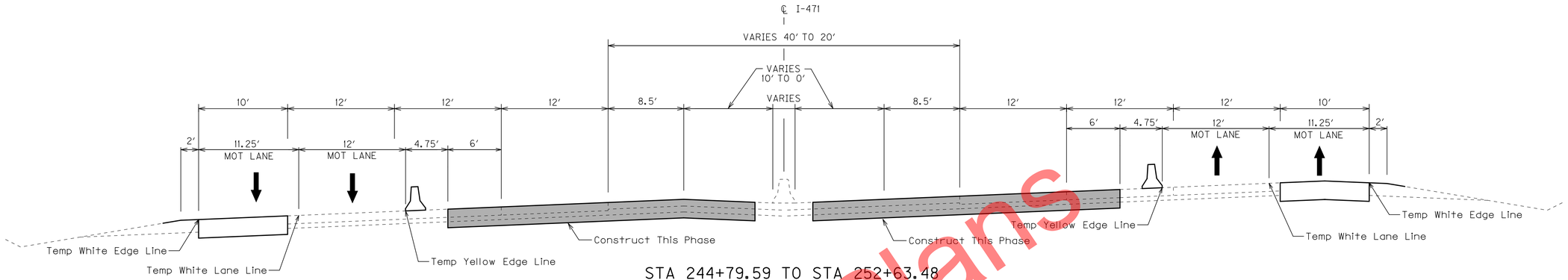

STA 244+79.59 TO STA 252+63.48
PHASE 2

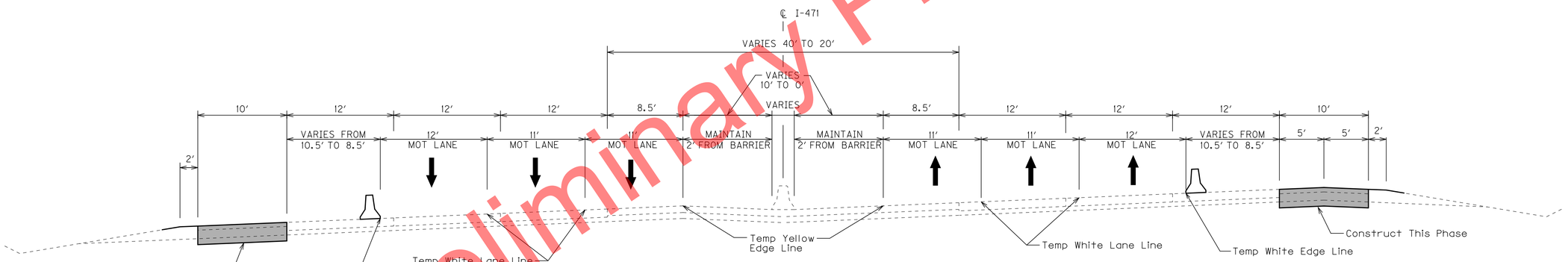

STA 244+79.59 TO STA 252+63.48
PHASE 1

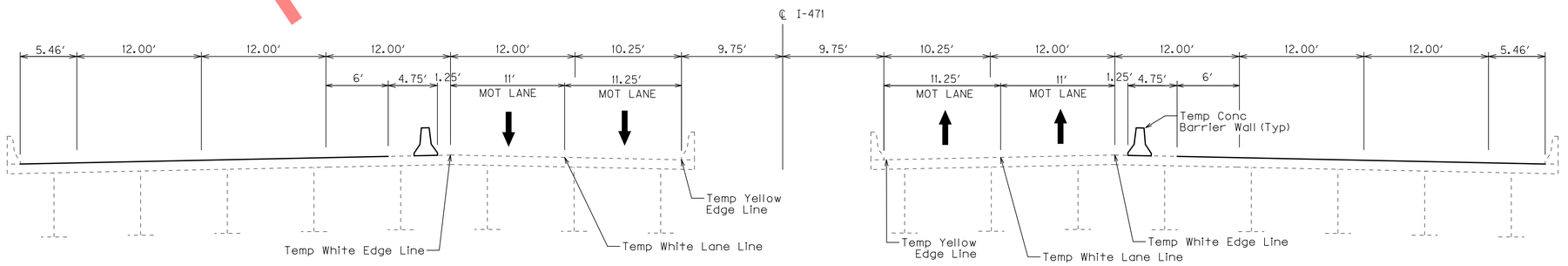

I-471 TWIN BRIDGES OVER CHESAPEAKE AVE
PHASE 3

MAINTENANCE OF TRAFFIC
TYPICAL SECTIONS

Preliminary Plans

MicroStation v8.11.7.443
E-SHEET NAME:
USER: tvonbehren
DATE PLOTTED: January 2, 2012
FILE NAME: P:\CIVIL\471\6-2021.00\CONTRACT PLANS AND PROPOSAL\CONTRACT PLAN SET\ROADWAY\R158OOMT.DGN

COUNTY OF	ITEM NO.	SHEET NO.
CAMPBELL	6-2021.00	R159

I-471 MAINTENANCE OF TRAFFIC TYPICAL SECTIONS

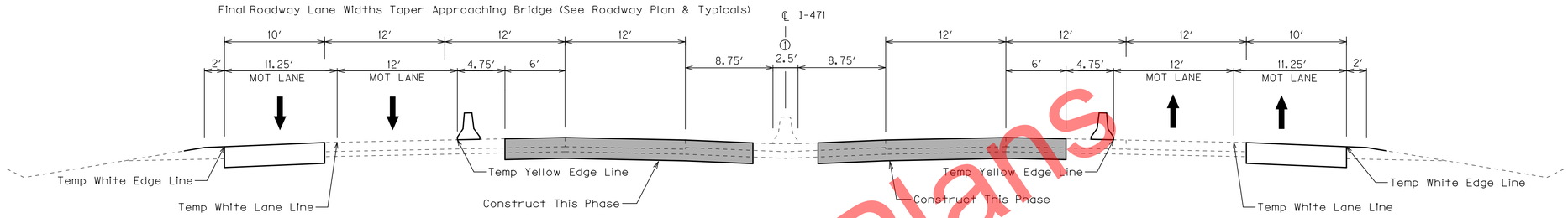

252+63.48 TO 6TH STREET BRIDGE
PHASE 2

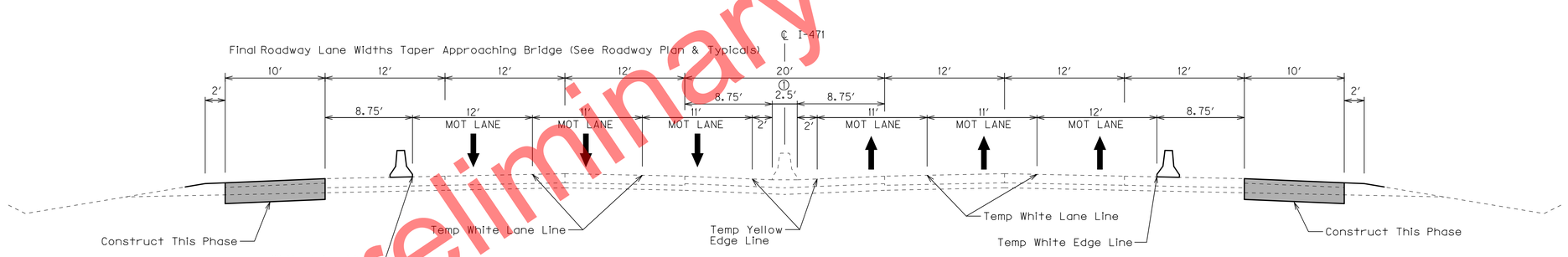

252+63.48 TO 6TH STREET BRIDGE
PHASE 1

① MEDIAN BARRIER WALL WIDENS TO 7.2′ @ CSX RAILROAD BRIDGE PIER.
SEE MAINTENANCE OF TRAFFIC TYPICAL SECTION FOR STA 259+61.

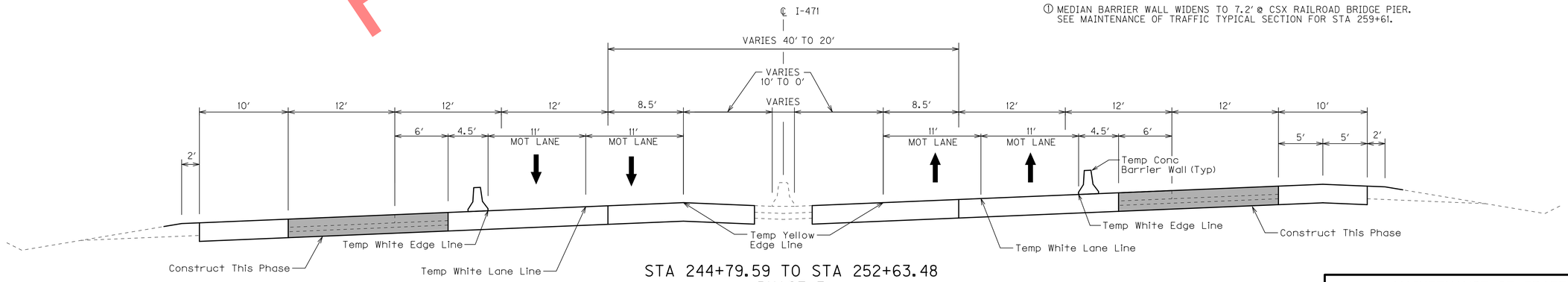

STA 244+79.59 TO STA 252+63.48
PHASE 3

MAINTENANCE OF TRAFFIC
TYPICAL SECTIONS

Preliminary Plans

MicroStation v8.11.7.443
E-SHEET NAME:
USER: tvonbehren
DATE PLOTTED: January 2, 2012
FILE NAME: P:\CIVIL\471\N6-2021.00\CONTRACT PLANS AND PROPOSAL\CONTRACT PLAN SET\ROADWAY\R159OOMT.DGN

COUNTY OF	ITEM NO.	SHEET NO.
CAMPBELL	6-2021.00	R160

I-471 MAINTENANCE OF TRAFFIC TYPICAL SECTIONS

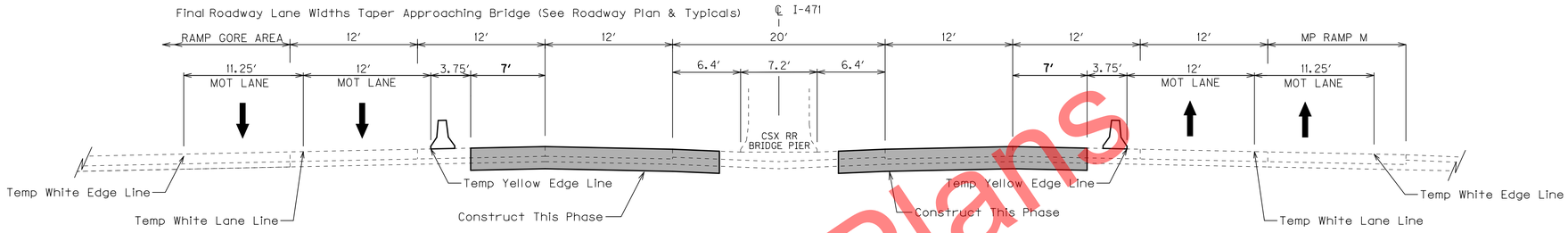

STA 259+61 (@ CSX RAILROAD BRIDGE PIER)
PHASE 2

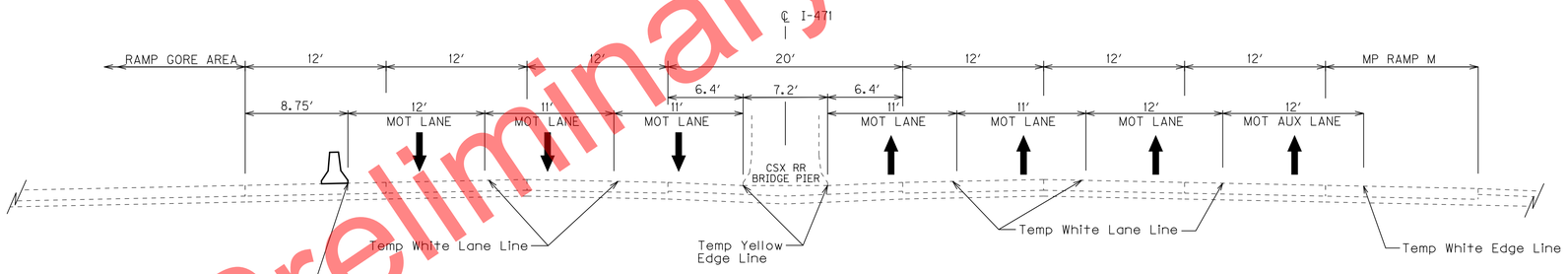

STA 259+61 (@ CSX RAILROAD BRIDGE PIER)
PHASE 1

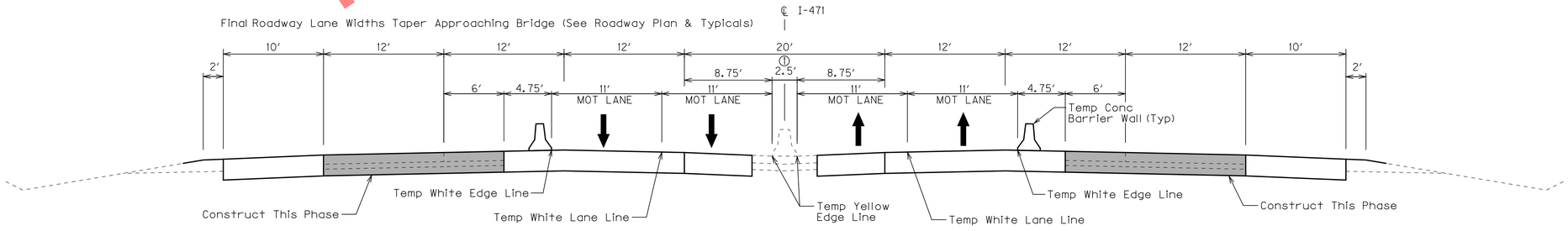

252+63.48 TO 6TH STREET BRIDGE
PHASE 3

① MEDIAN BARRIER WALL WIDENS TO 7.2′ @ CSX RAILROAD BRIDGE PIER.
SEE MAINTENANCE OF TRAFFIC TYPICAL SECTION FOR STA 259+61.

MAINTENANCE OF TRAFFIC
TYPICAL SECTIONS

Preliminary Plans

MicroStation v8.11.7.443
E-SHEET NAME:
USER: tvonbehren
DATE PLOTTED: January 2, 2012
FILE NAME: P:\CIVIL\147\6-2021.00\CONTRACT PLANS AND PROPOSAL\CONTRACT PLAN SET\ROADWAY\R160OOMT.DGN

COUNTY OF	ITEM NO.	SHEET NO.
CAMPBELL	6-2021.00	R161

I–471 MAINTENANCE OF TRAFFIC TYPICAL SECTIONS

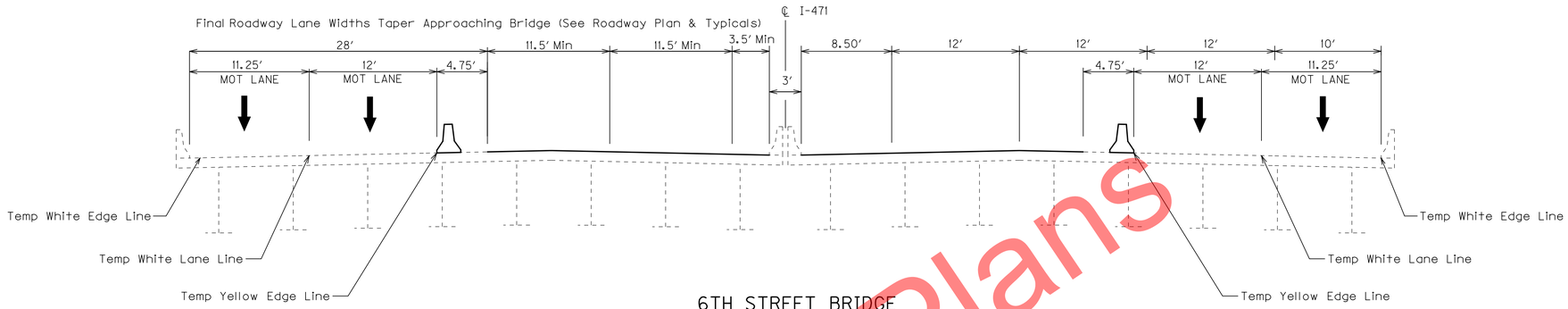

6TH STREET BRIDGE
PHASE 2

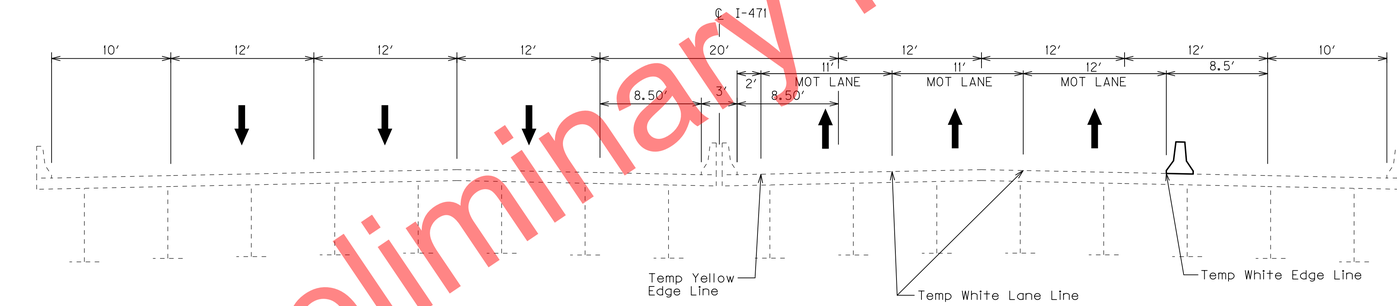

6TH STREET BRIDGE
PHASE 1

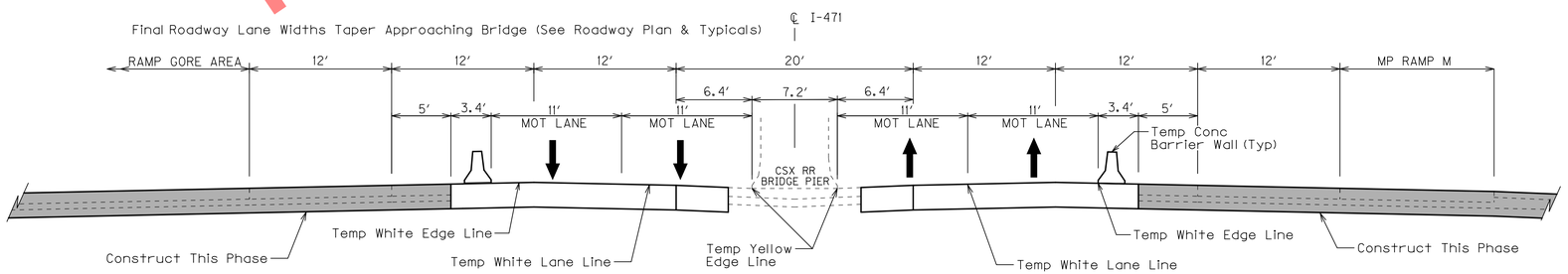

STA 259+61 (@ CSX RAILROAD BRIDGE PIER)
PHASE 3

MAINTENANCE OF TRAFFIC
TYPICAL SECTIONS

Preliminary Plans

MicroStation v8.11.7.443
E-SHEET NAME:
USER: tvonbehren
DATE PLOTTED: January 2, 2012
FILE NAME: P:\CIVIL\471\6-2021.00\CONTRACT PLANS AND PROPOSAL\CONTRACT PLAN SET\ROADWAY\R161OOMT.DGN

COUNTY OF	ITEM NO.	SHEET NO.
CAMPBELL	6-2021.00	R162

I–471 MAINTENANCE OF TRAFFIC TYPICAL SECTIONS

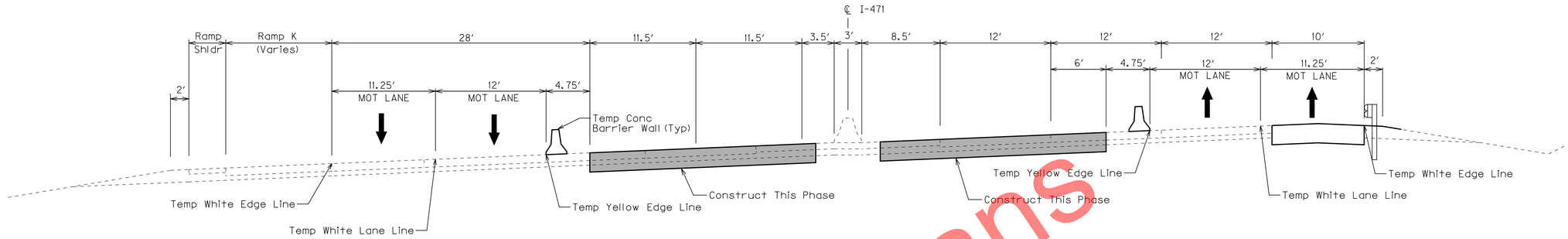

FROM 6TH STREET BRIDGE TO STA 287+67.39
PHASE 2

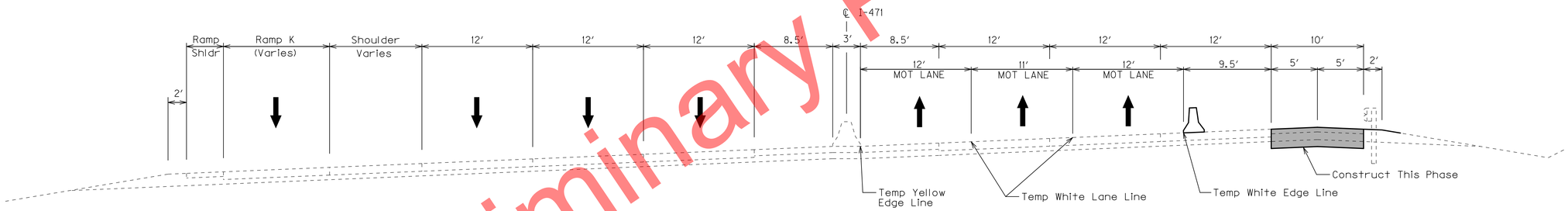

FROM 6TH STREET BRIDGE TO STA 287+67.39
PHASE 1

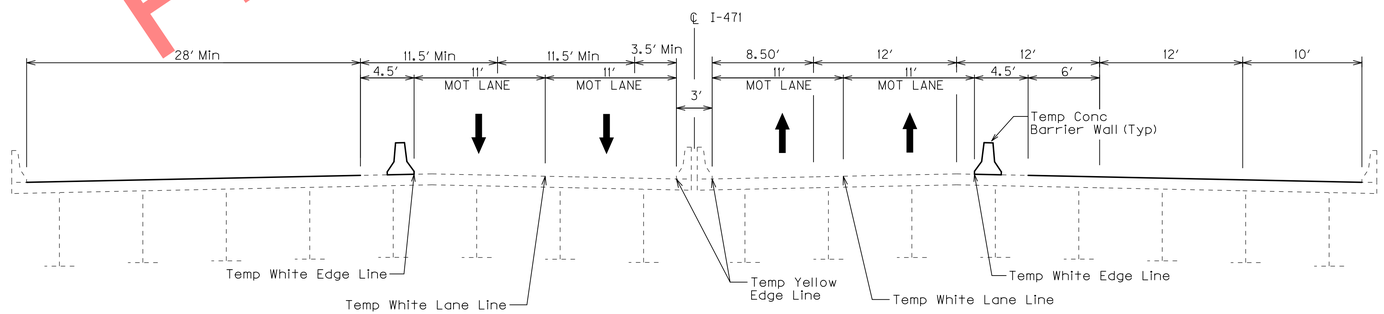

6TH STREET BRIDGE
PHASE 3

MAINTENANCE OF TRAFFIC
TYPICAL SECTIONS

Preliminary Plans

MicroStation v8.11.7.443
E-SHEET NAME:
USER: tvonbehren
DATE PLOTTED: January 2, 2012
FILE NAME: P:\CIVIL\471\N6-2021.00\CONTRACT PLANS AND PROPOSAL\CONTRACT PLAN SET\ROADWAY\R162OMT.DGN

COUNTY OF	ITEM NO.	SHEET NO.
CAMPBELL	6-2021.00	R163

I–471 MAINTENANCE OF TRAFFIC TYPICAL SECTIONS

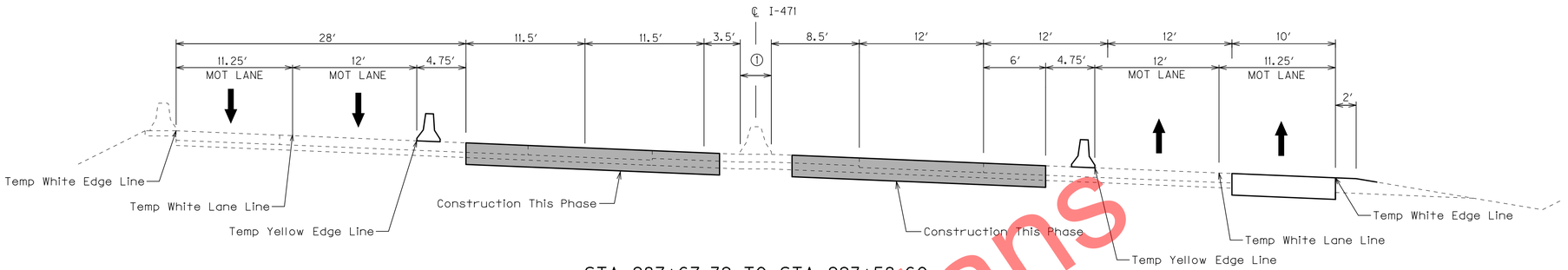

STA 287+67.39 TO STA 293+58.60
PHASE 2

① 3.0′ STA 287+68.33 TO STA 291+75.95
VARIES FROM 3.0′ @ STA 291+75.95 TO 19.5′ @ STA 296+77.71

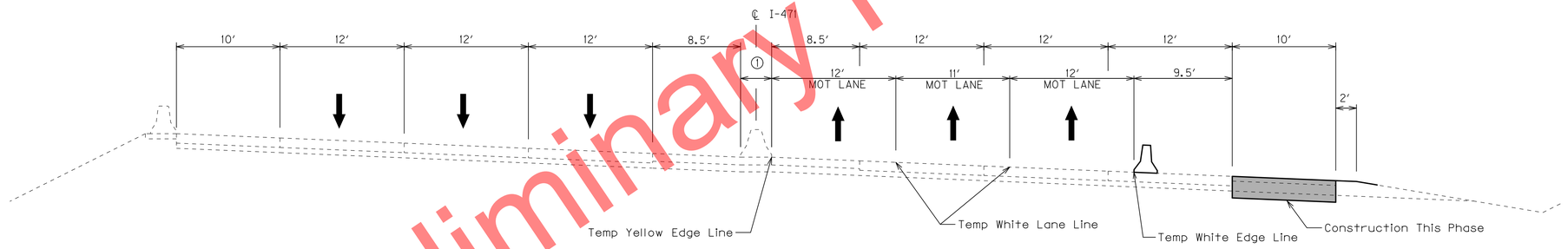

STA 287+67.39 TO STA 293+58.60
PHASE 1

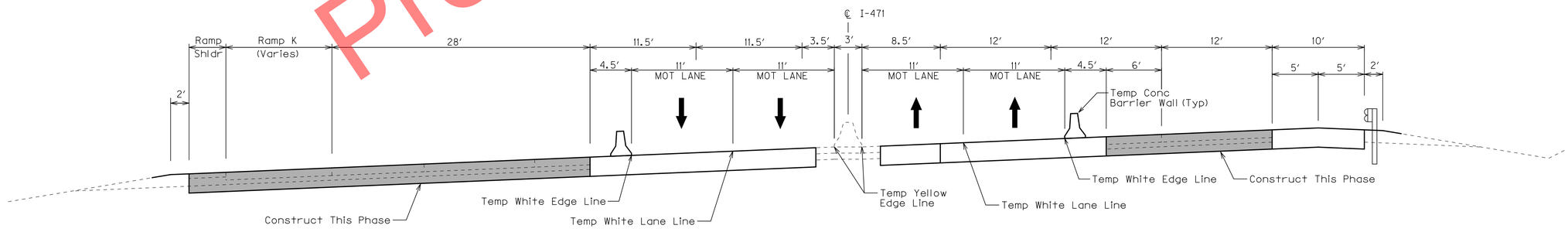

FROM 6TH STREET BRIDGE TO STA 287+67.39
PHASE 3

MAINTENANCE OF TRAFFIC
TYPICAL SECTIONS

Preliminary Plans

MicroStation v8.11.7.443
E-SHEET NAME:
USER: tvonbehren
DATE PLOTTED: January 2, 2012
FILE NAME: P:\CIVIL\471\N6-2021.00\CONTRACT PLANS AND PROPOSAL\CONTRACT PLAN SET\ROADWAY\R163OMT.DGN

COUNTY OF	ITEM NO.	SHEET NO.
CAMPBELL	6-2021.00	R164

I-471 MAINTENANCE OF TRAFFIC TYPICAL SECTIONS

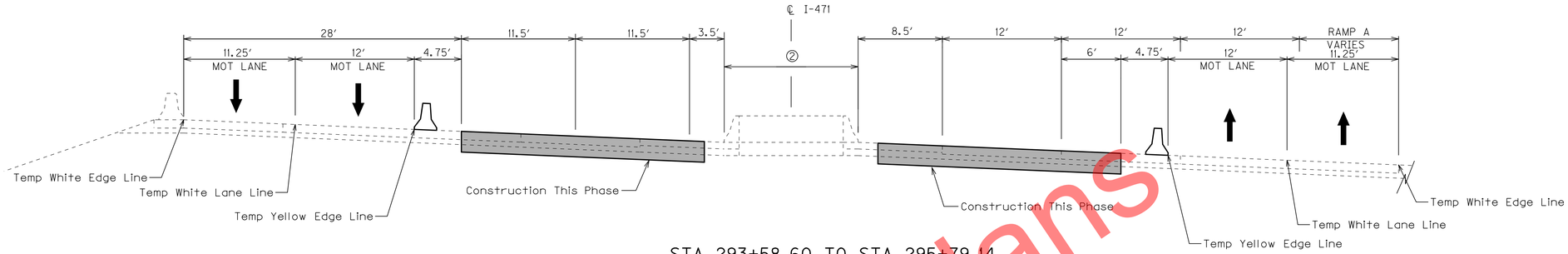

STA 293+58.60 TO STA 295+79.14
PHASE 2

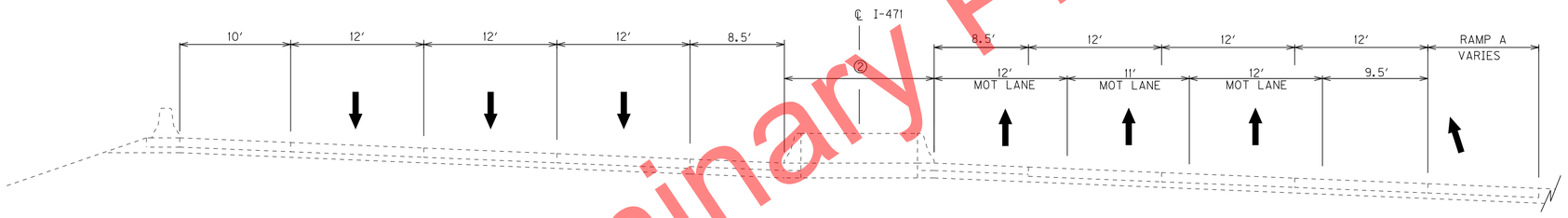

STA 293+58.60 TO STA 295+79.14
PHASE 1

① 3.0′ STA 287+68.33 TO STA 291+75.95
VARIES FROM 3.0′ @ STA 291+75.95 TO 19.5′ @ STA 296+77.71

② VARIES FROM 3.0′ @ STA 291+75.95 TO 19.5′ @ STA 296+77.71

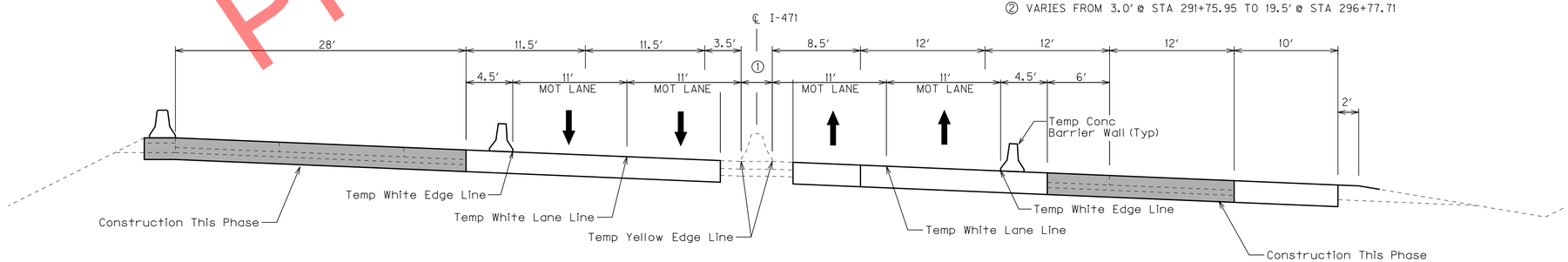

STA 287+67.39 TO STA 293+58.60
PHASE 3

MAINTENANCE OF TRAFFIC
TYPICAL SECTIONS

Preliminary Plans

FILE NAME: P:\CIVIL\147\N6-2021.00\CONTRACT PLANS AND PROPOSAL\CONTRACT PLAN SET\ROADWAY\R164OMT.DGN
USER: tvonbehren
DATE PLOTTED: January 2, 2012
E-SHEET NAME:
MicroStation v8.11.7.443

COUNTY OF	ITEM NO.	SHEET NO.
CAMPBELL	6-2021.00	R165

I–471 MAINTENANCE OF TRAFFIC TYPICAL SECTIONS

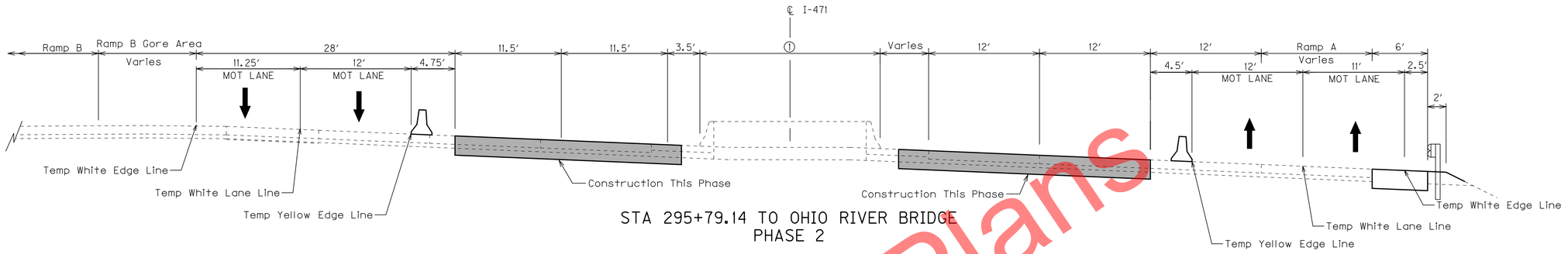

STA 295+79.14 TO OHIO RIVER BRIDGE
PHASE 2

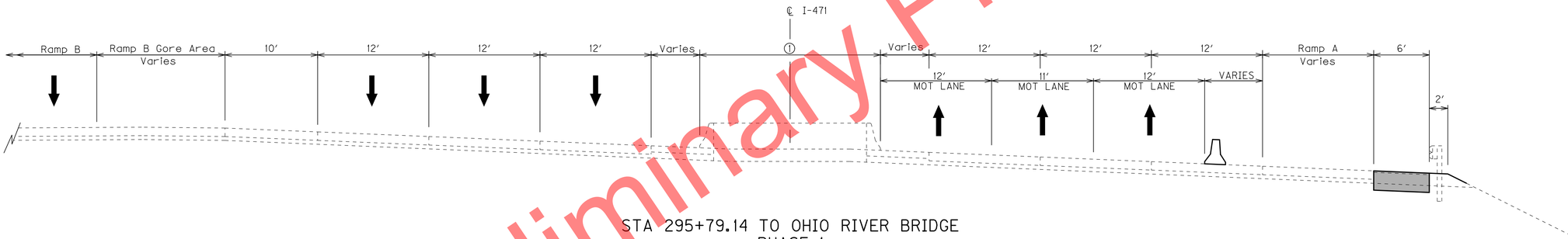

STA 295+79.14 TO OHIO RIVER BRIDGE
PHASE 1

① VARIES FROM 3.0′ @ STA 291+75.95 TO 19.5′ @ STA 296+77.71

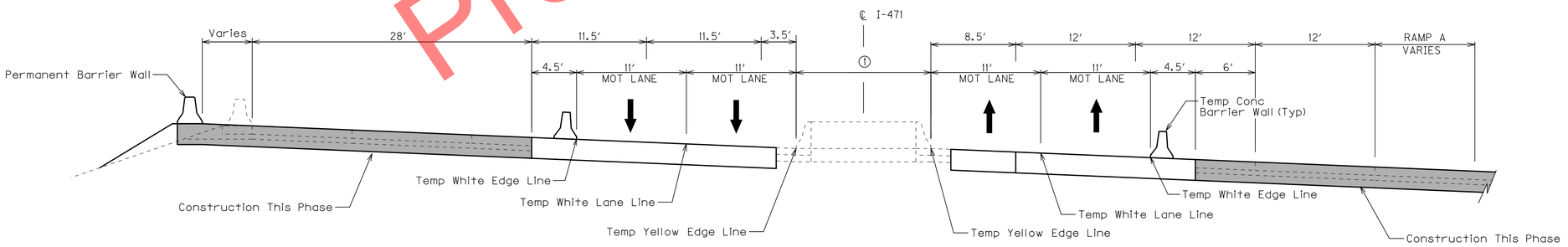

STA 293+58.60 TO STA 295+79.14
PHASE 3

Preliminary Plans

MAINTENANCE OF TRAFFIC
TYPICAL SECTIONS

FILE NAME: P:\CIVIL\471N\6-2021.00\CONTRACT PLANS AND PROPOSAL\CONTRACT PLAN SET\ROADWAY\R165OMT.DGN
USER: tvonbehren
DATE PLOTTED: January 2, 2012
E-SHEET NAME:
MicroStation v8.11.7.443

COUNTY OF	ITEM NO.	SHEET NO.
CAMPBELL	6-2021.00	R166

I–471 MAINTENANCE OF TRAFFIC TYPICAL SECTIONS

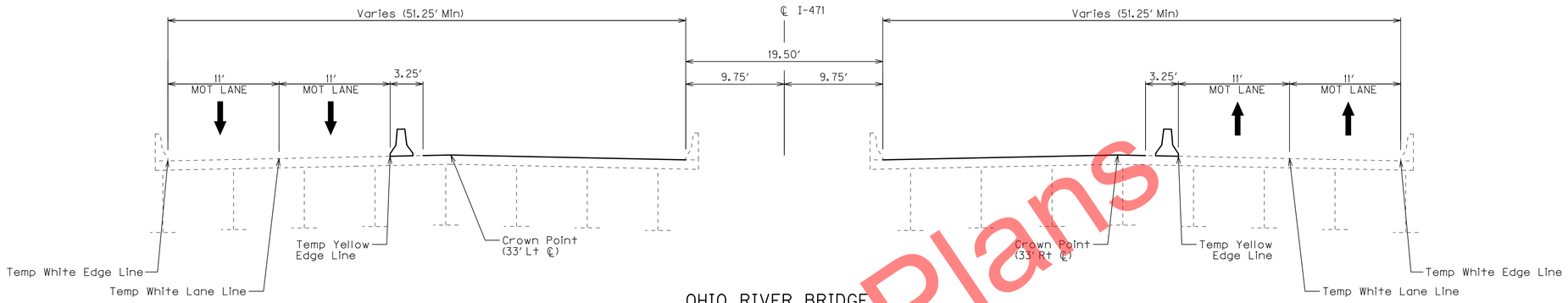

OHIO RIVER BRIDGE
PHASE 2

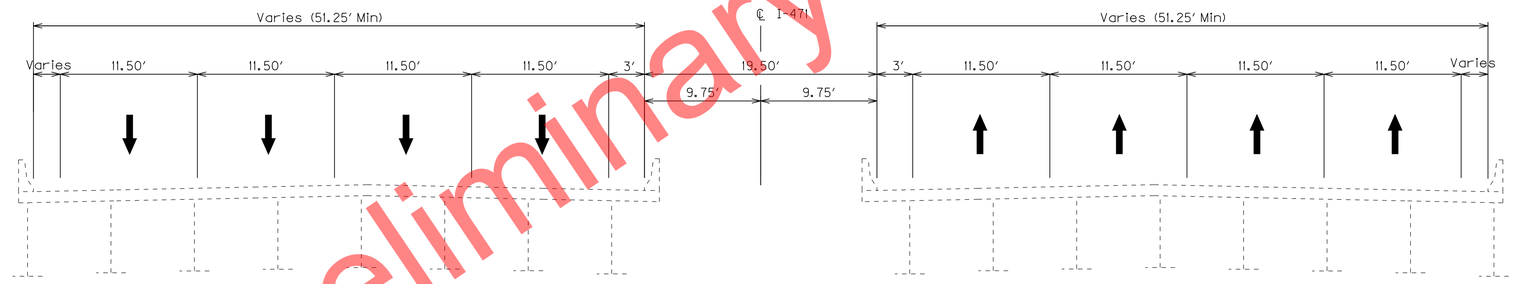

OHIO RIVER BRIDGE
PHASE 1

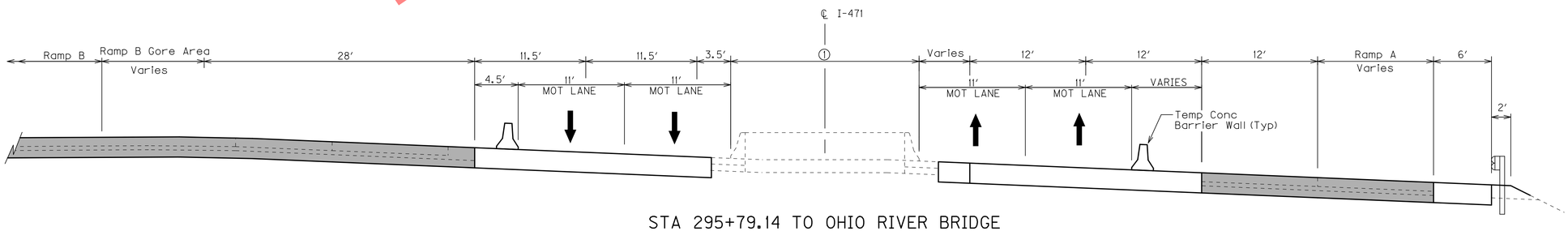

STA 295+79.14 TO OHIO RIVER BRIDGE
PHASE 3

① VARIES FROM 3.0' @ STA 291+75.95 TO 19.5' @ STA 296+77.71

MAINTENANCE OF TRAFFIC
TYPICAL SECTIONS

Preliminary Plans

MicroStation v8.11.7.443
E-SHEET NAME:
USER: tvonbehren
DATE PLOTTED: January 2, 2012
FILE NAME: P:\CIVIL\471\6-2021.00\CONTRACT PLANS AND PROPOSAL\CONTRACT PLAN SET\ROADWAY\R166OMT.DGN

COUNTY OF	ITEM NO.	SHEET NO.
CAMPBELL	6-2021.00	R167

I–471 MAINTENANCE OF TRAFFIC TYPICAL SECTIONS

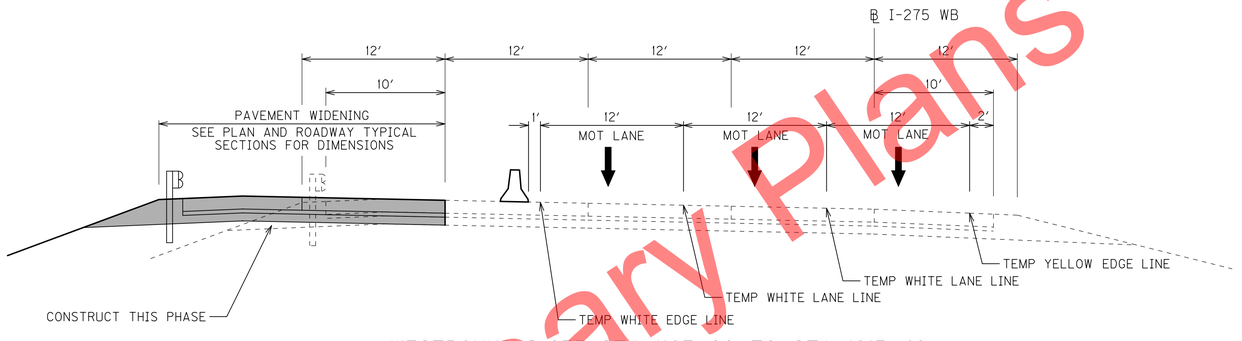

WESTBOUND I-275 STA 1197+60 TO STA 1215+40
PHASE 3

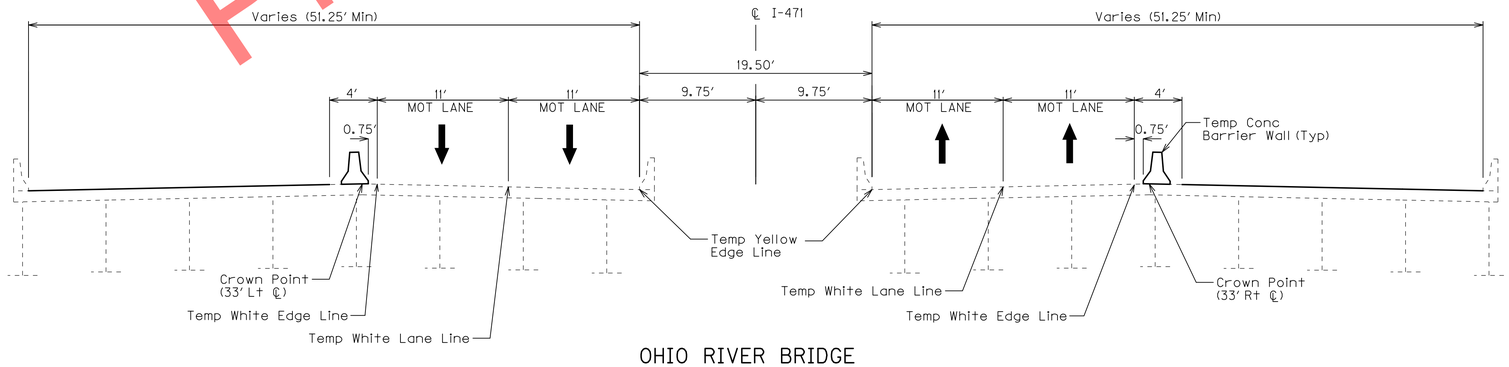

OHIO RIVER BRIDGE
PHASE 3

MAINTENANCE OF TRAFFIC
TYPICAL SECTIONS

Preliminary Plans

FILE NAME: P:\CIVIL\147N\6-2021.00\CONTRACT PLANS AND PROPOSAL\CONTRACT PLAN SET\ROADWAY\R167OOMT.DGN
USER: tvonbehren
DATE PLOTTED: January 2, 2012
E-SHEET NAME:
MicroStation v8.11.7.443

COUNTY OF	ITEM NO.	SHEET NO.
CAMPBELL	6-2021.00	R168

RAMP MAINTENANCE OF TRAFFIC TYPICAL SECTIONS

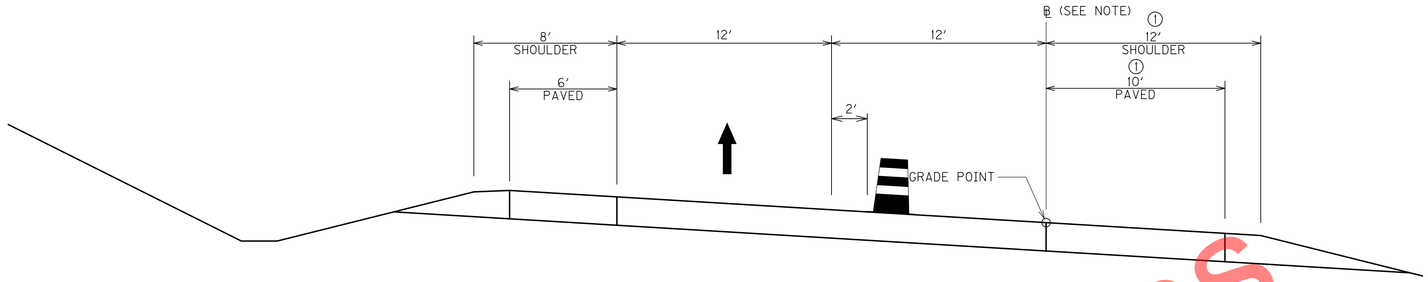

I-275 RAMP A PHASE 3A
(WHILE OPEN PRIOR TO COMPLETION OF I-275 WB WIDENING)

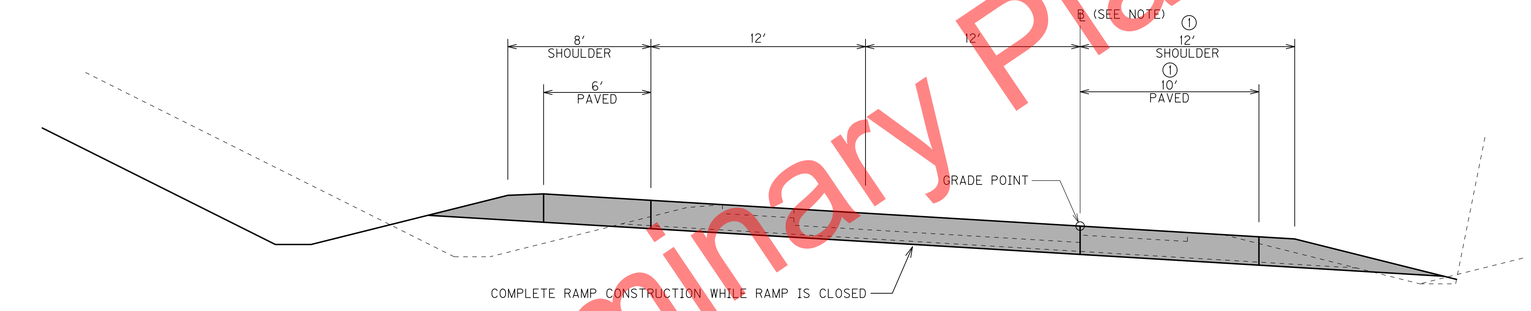

I-275 RAMP A PHASE 3
(WHEN RAMP IS CLOSED)

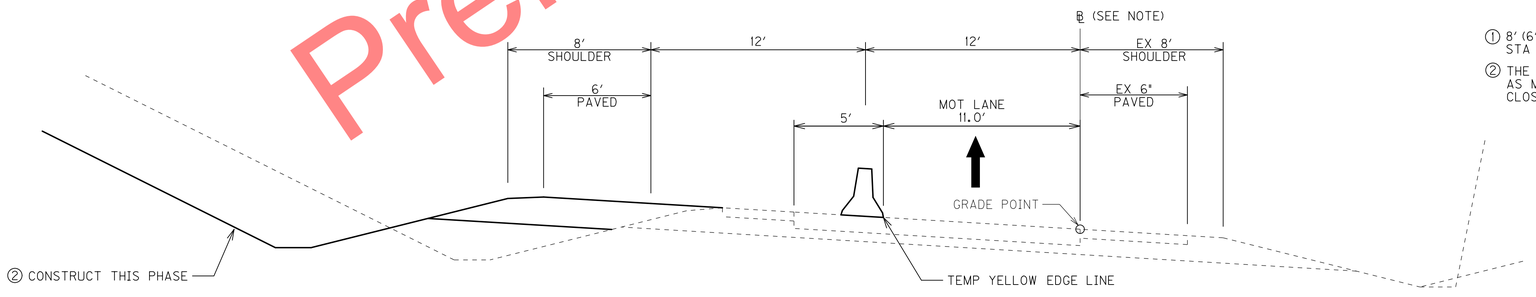

I-275 RAMP A PHASE 3

① 8′ (6′ PAVED) STA 0+00 TO STA 8+63, 10′ (8′ PAVED) STA 8+63 TO STA 22+30

② THE CONTRACTOR IS TO USE THIS TYPICAL TO COMPLETE AS MUCH OF THE RAMP WIDENING WORK AS POSSIBLE PRIOR TO CLOSING THE RAMP TO COMPLETE THE REMAINING WORK ON THE RAMP.

NOTE:

THE RAMP A BASELINE DIVERGES FROM THE EXITING EDGE OF PAVEMENT BEGINNING APPROXIMATELY STA 15+50 TO APPROXIMATELY THREE FEET RIGHT OF THE EXISTING BASELINE AT STA 21+81.68.

MAINTENANCE OF TRAFFIC
TYPICAL SECTIONS

Preliminary Plans

FILE NAME: P:\CIVIL\147IN6-2021.00\CONTRACT PLANS AND PROPOSAL\CONTRACT PLAN SET\ROADWAY\R168OMT.DGN
USER: tvonbehren
DATE PLOTTED: January 2, 2012
E-SHEET NAME:
MicroStation v8.11.7.443

COUNTY OF	ITEM NO.	SHEET NO.
CAMPBELL	6-2021.00	R169

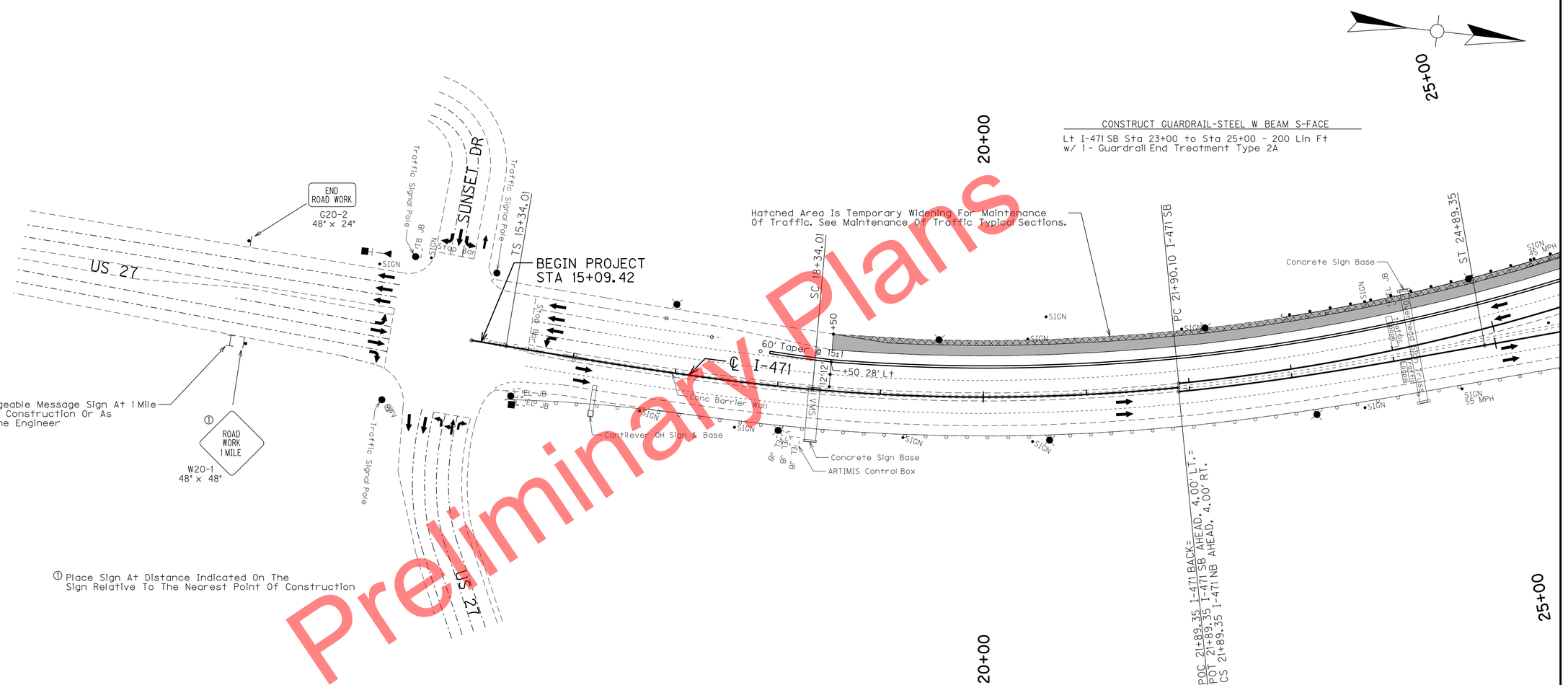

Preliminary Plans

LEGEND

- Temporary Concrete Barrier Wall
- Channelizing Device
- Construction This Phase

SIGNS WILL BE COVERED, REMOVED, STORED, OR PLACED AS DIRECTED BY THE ENGINEER.

SCALE: 1"= 50'

MAINTENANCE OF TRAFFIC PLAN PHASE 1
I-471 STA 15+30 TO STA 21+89.35
I-471 NB&SB STA 21+89.35 TO STA 25+00

FILE NAME: P:\CIVIL\147\N6-2021.00\CONTRACT PLANS AND PROPOSAL\CONTRACT PLAN SET\ROADWAY\R169OMT.DGN
USER: tvonbehren
DATE PLOTTED: January 2, 2012
E-SHEET NAME:
MicroStation v8.11.7.443

COUNTY OF	ITEM NO.	SHEET NO.
CAMPBELL	6-2021.00	R170

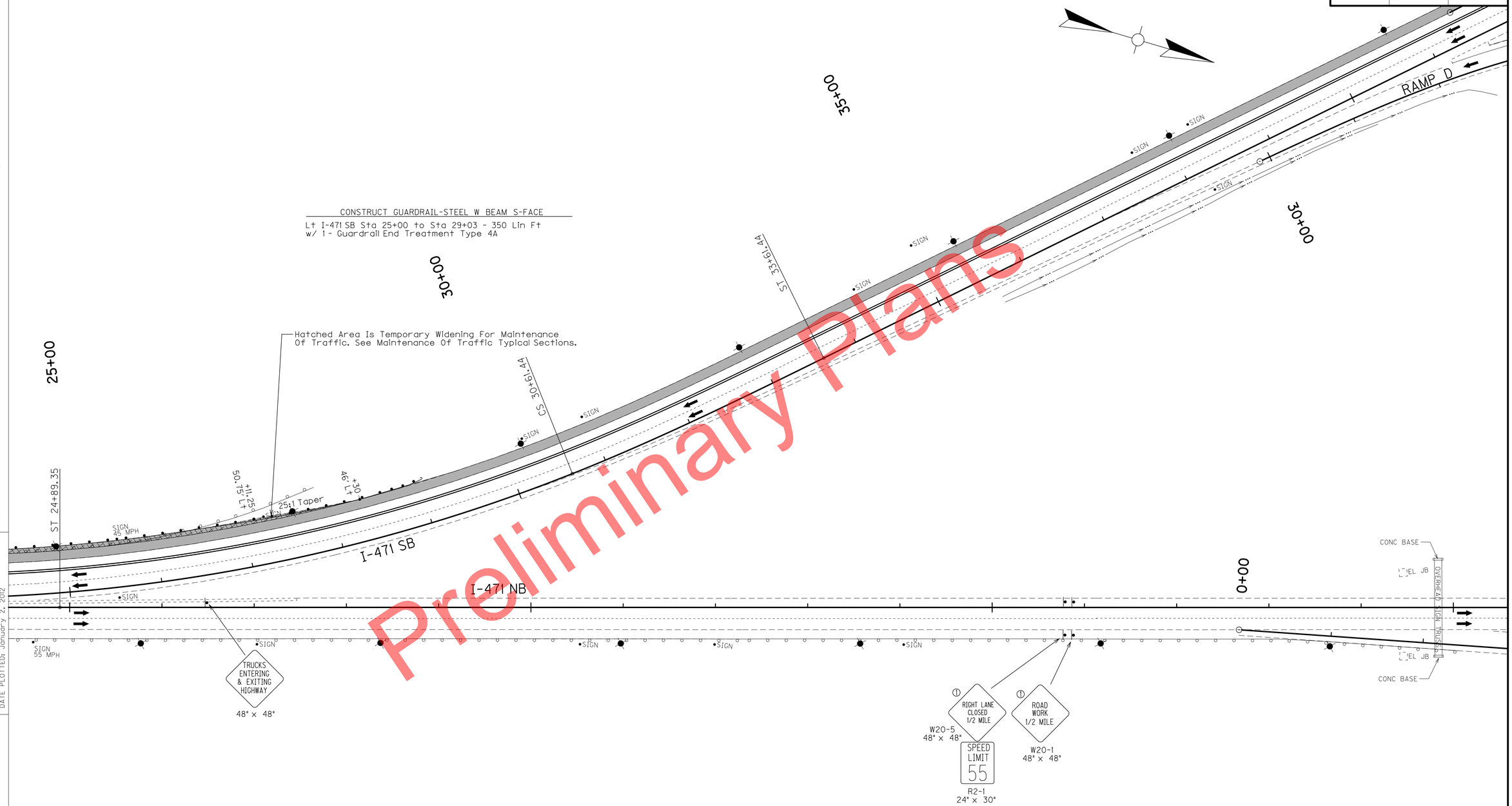

LEGEND

- Temporary Concrete Barrier Wall
- Channelizing Device
- Construction This Phase

SIGNS WILL BE COVERED, REMOVED, STORED, OR PLACED AS DIRECTED BY THE ENGINEER.

SCALE: 1"= 50'

MAINTENANCE OF TRAFFIC PLAN-PHASE 1
I-471 NB STA 25+00 TO STA 40+00
I-471 SB STA 25+00 TO STA 40+00

FILE NAME: P:\CIVIL\I471\6-2021.00\CONTRACT PLANS AND PROPOSAL\CONTRACT PLAN SET\ROADWAY\R170OOMT.DGN
USER: tvonbehren
DATE PLOTTED: January 2, 2012
E-SHEET NAME:
MicroStation v8.11.7.443

COUNTY OF	ITEM NO.	SHEET NO.
CAMPBELL	6-2021.00	R171

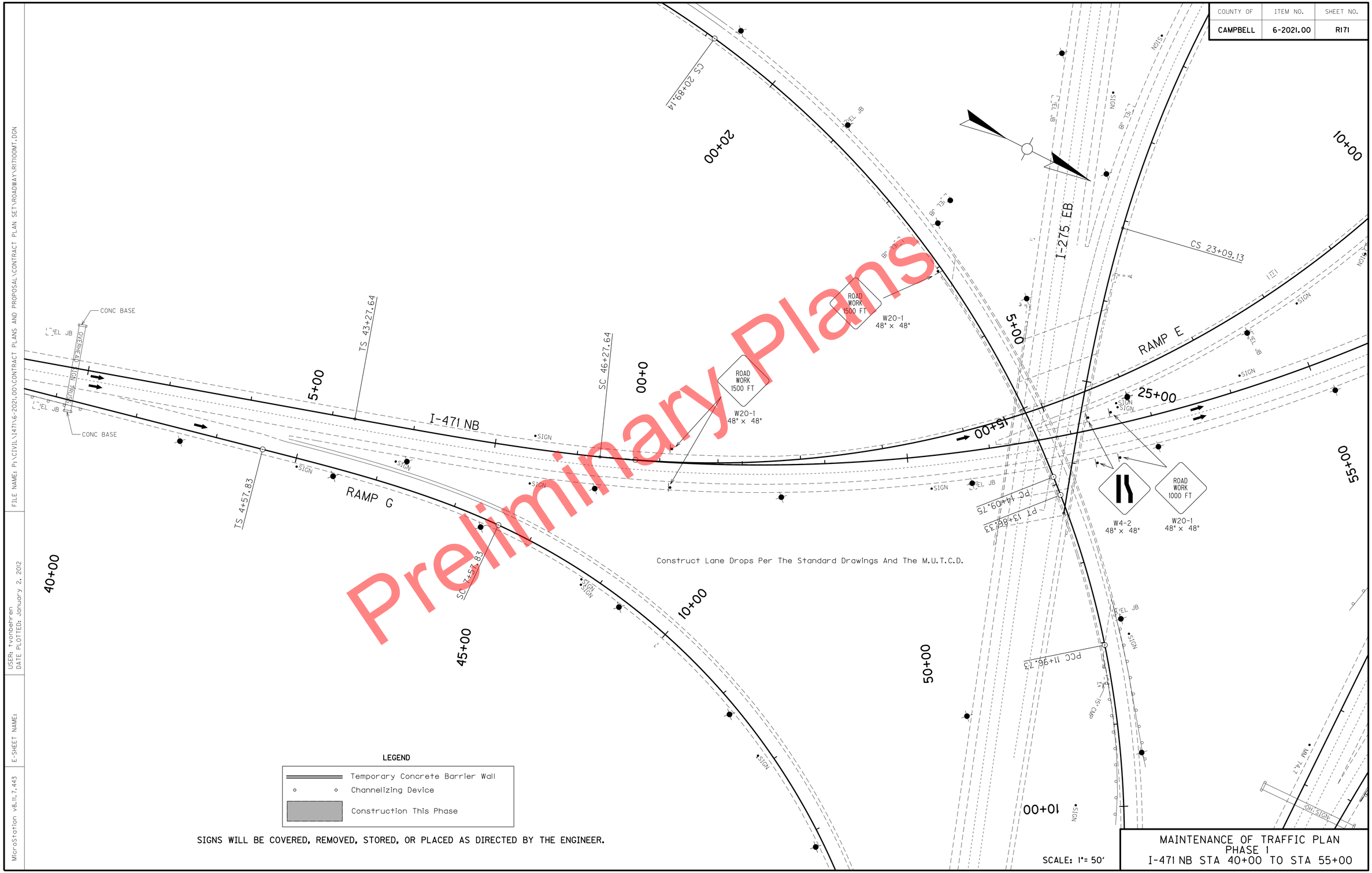

MAINTENANCE OF TRAFFIC PLAN
PHASE 1
I-471 NB STA 40+00 TO STA 55+00

FILE NAME: P:\CIVIL\I471\6-2021.00\CONTRACT PLANS AND PROPOSAL\CONTRACT PLAN SET\ROADWAY\R171OOMT.DGN
USER: tvonbehren
DATE PLOTTED: January 2, 2012
E-SHEET NAME:
MicroStation v8.11.7.443

COUNTY OF	ITEM NO.	SHEET NO.
CAMPBELL	6-2021.00	R172

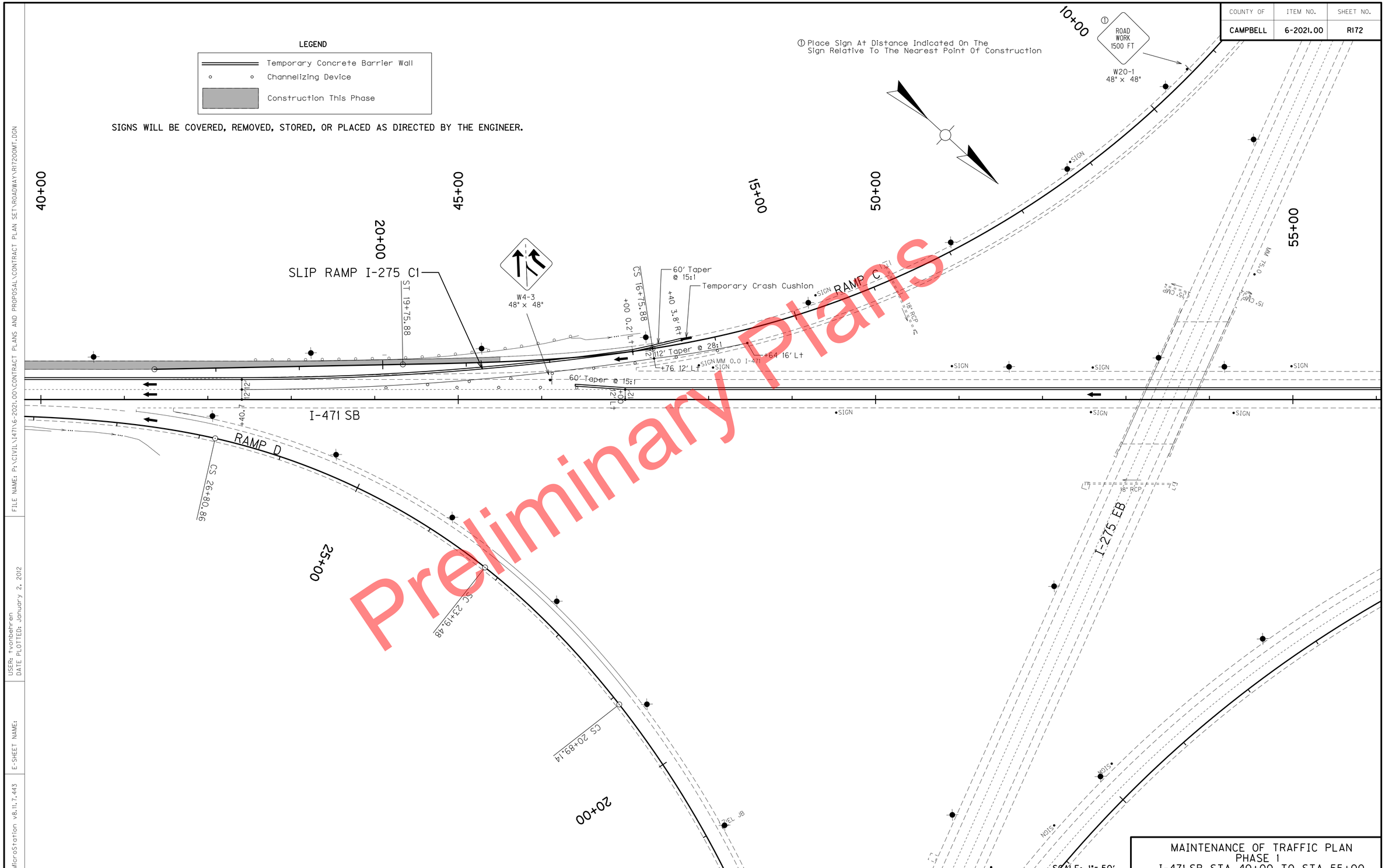

MAINTENANCE OF TRAFFIC PLAN
PHASE 1
I-471 SB STA 40+00 TO STA 55+00

Preliminary Plans

FILE NAME: P:\CIVIL\I471\6-2021.00\CONTRACT PLANS AND PROPOSAL\CONTRACT PLAN SET\ROADWAY\R172OOMT.DGN
USER: tvonbehren
DATE PLOTTED: January 2, 2012
E-SHEET NAME:
MicroStation v8.11.7.443

COUNTY OF	ITEM NO.	SHEET NO.
CAMPBELL	6-2021.00	R173

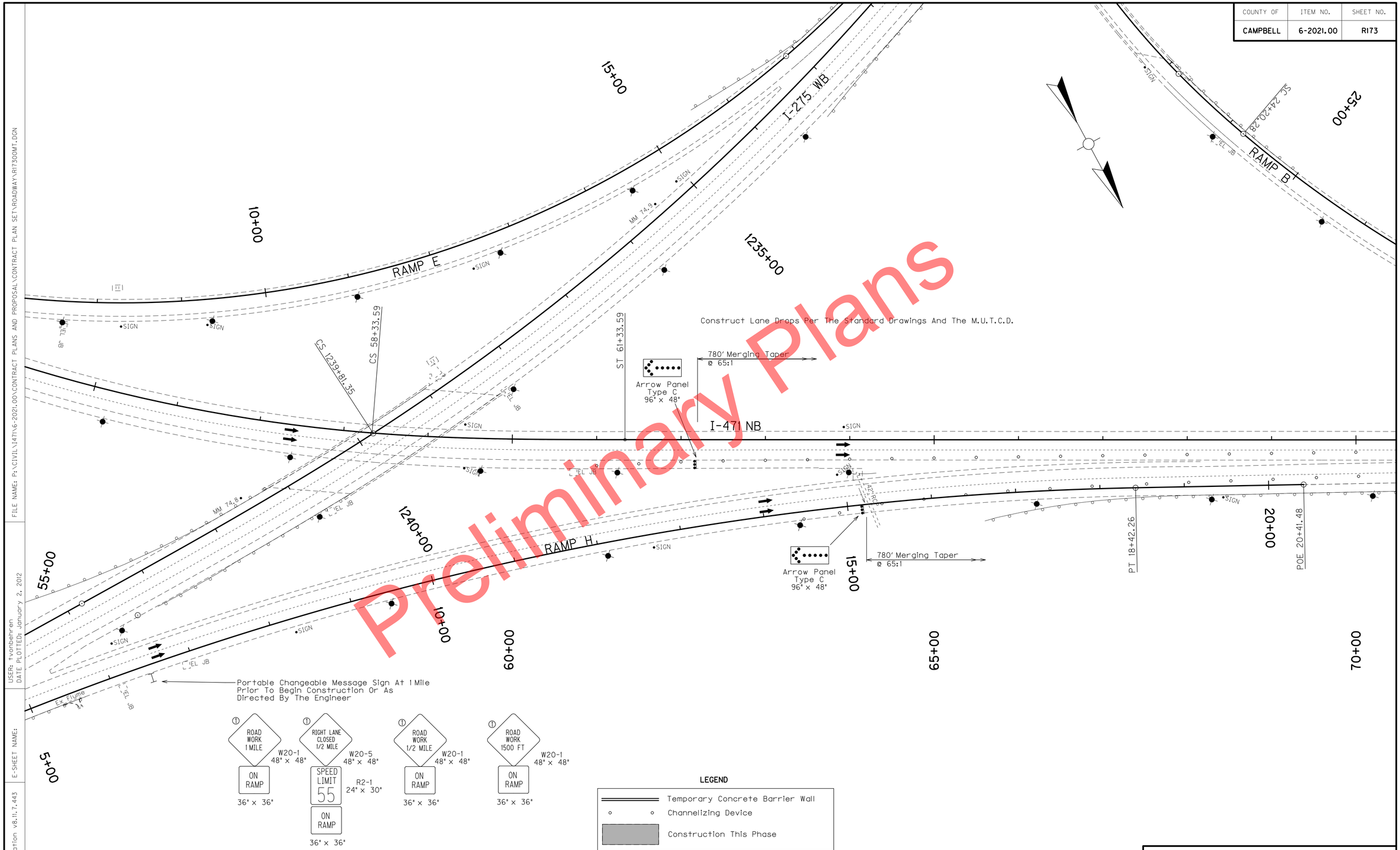

① Place Sign At Distance Indicated On The Sign Relative To The Nearest Point Of Construction

SIGNS WILL BE COVERED, REMOVED, STORED, OR PLACED AS DIRECTED BY THE ENGINEER.

SCALE: 1"= 50'

MAINTENANCE OF TRAFFIC PLAN
PHASE 1
I-471 NB STA 55+00 TO STA 70+00

FILE NAME: P:\CIVIL\I471\6-2021.00\CONTRACT PLANS AND PROPOSAL\CONTRACT PLAN SET\ROADWAY\R173OOMT.DGN
USER: tvonbehren
DATE PLOTTED: January 2, 2012
E-SHEET NAME:
MicroStation v8.11.7.443

COUNTY OF	ITEM NO.	SHEET NO.
CAMPBELL	6-2021.00	RI74

Portable Changeable Message Sign At 1 Mile Prior To Begin Construction Or As Directed By The Engineer

① ROAD WORK 1 MILE — W20-1 48" x 48" — ON RAMP 36" x 36"

① ROAD WORK 1/2 MILE — W20-1 48" x 48" — ON RAMP 36" x 36"

① Place Sign At Distance Indicated On The Sign Relative To The Nearest Point Of Construction

ROAD WORK 1500 FT — W20-1 48" x 48"

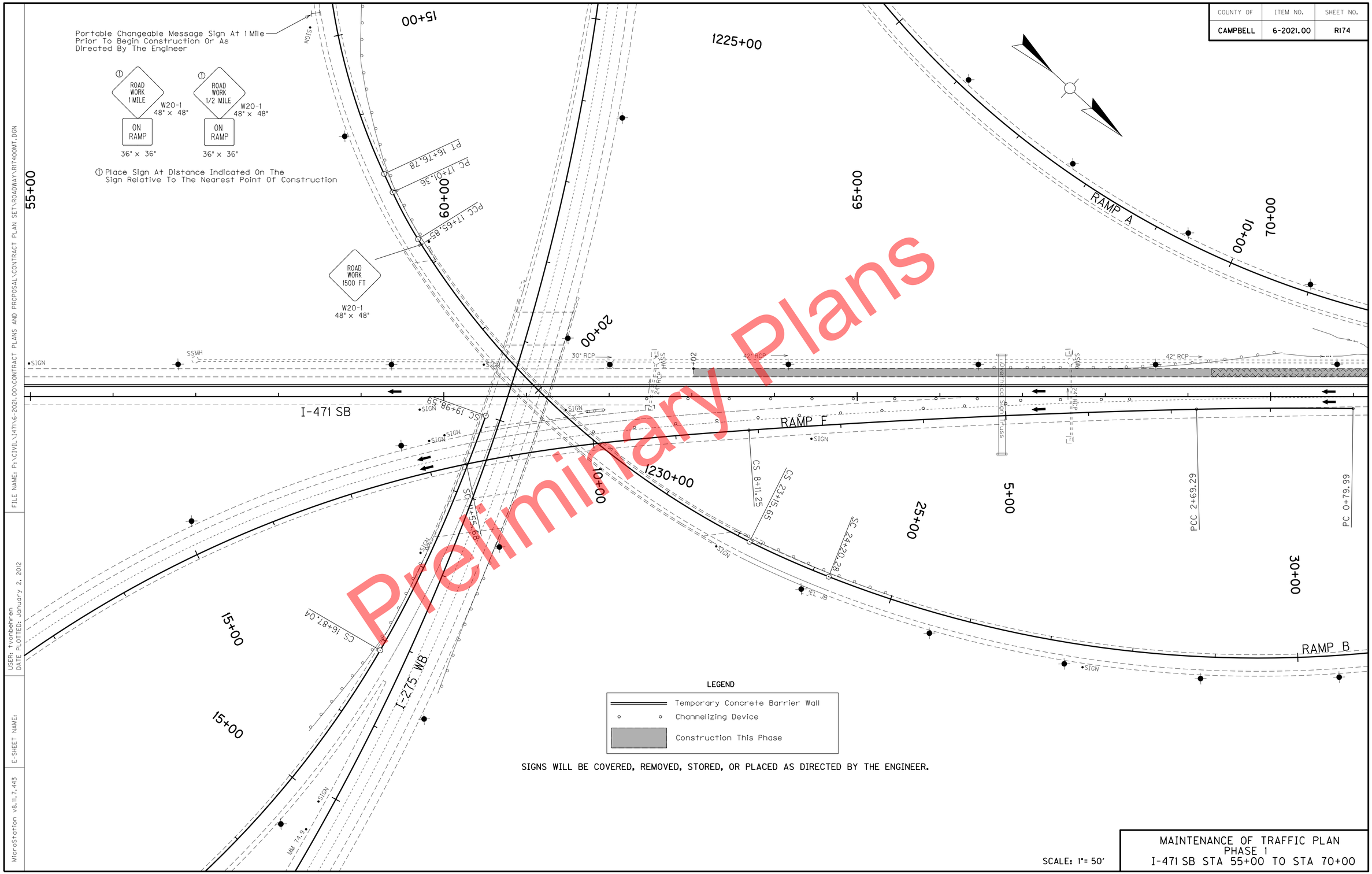

LEGEND

- Temporary Concrete Barrier Wall
- Channelizing Device
- Construction This Phase

SIGNS WILL BE COVERED, REMOVED, STORED, OR PLACED AS DIRECTED BY THE ENGINEER.

Preliminary Plans

SCALE: 1"= 50'

MAINTENANCE OF TRAFFIC PLAN
PHASE 1
I-471 SB STA 55+00 TO STA 70+00

MicroStation v8.11.7.443
E-SHEET NAME:
USER: tvonbehren
DATE PLOTTED: January 2, 2012
FILE NAME: P:\CIVIL\147IN6-2021.00\CONTRACT PLANS AND PROPOSAL\CONTRACT PLAN SET\ROADWAY\RI7400MT.DGN

COUNTY OF	ITEM NO.	SHEET NO.
CAMPBELL	6-2021.00	R175

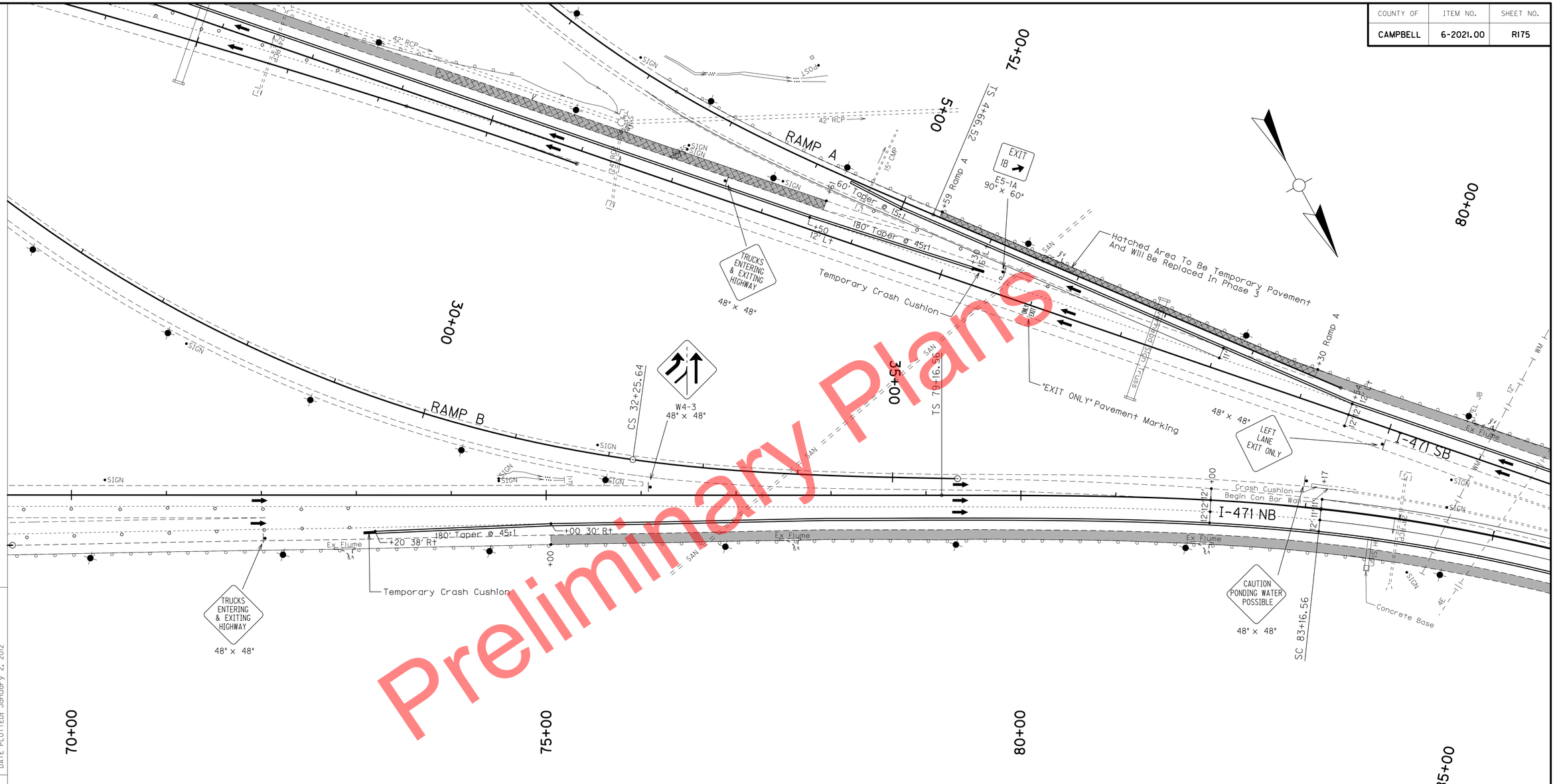

Preliminary Plans

LEGEND

	Temporary Concrete Barrier Wall
	Channelizing Device
	Construction This Phase

SIGNS WILL BE COVERED, REMOVED, STORED, OR PLACED AS DIRECTED BY THE ENGINEER.

SCALE: 1"= 50'

MAINTENANCE OF TRAFFIC PLAN
PHASE 1
I-471 NB STA 70+00 TO STA 85+00

FILE NAME: P:\CIVIL\I471\6-2021.00\CONTRACT PLANS AND PROPOSAL\CONTRACT PLAN SET\ROADWAY\R175OOMT.DGN

USER: tvonbehren
DATE PLOTTED: January 2, 2012

E-SHEET NAME:

MicroStation v8.11.7.443

COUNTY OF	ITEM NO.	SHEET NO.
CAMPBELL	6-2021.00	R176

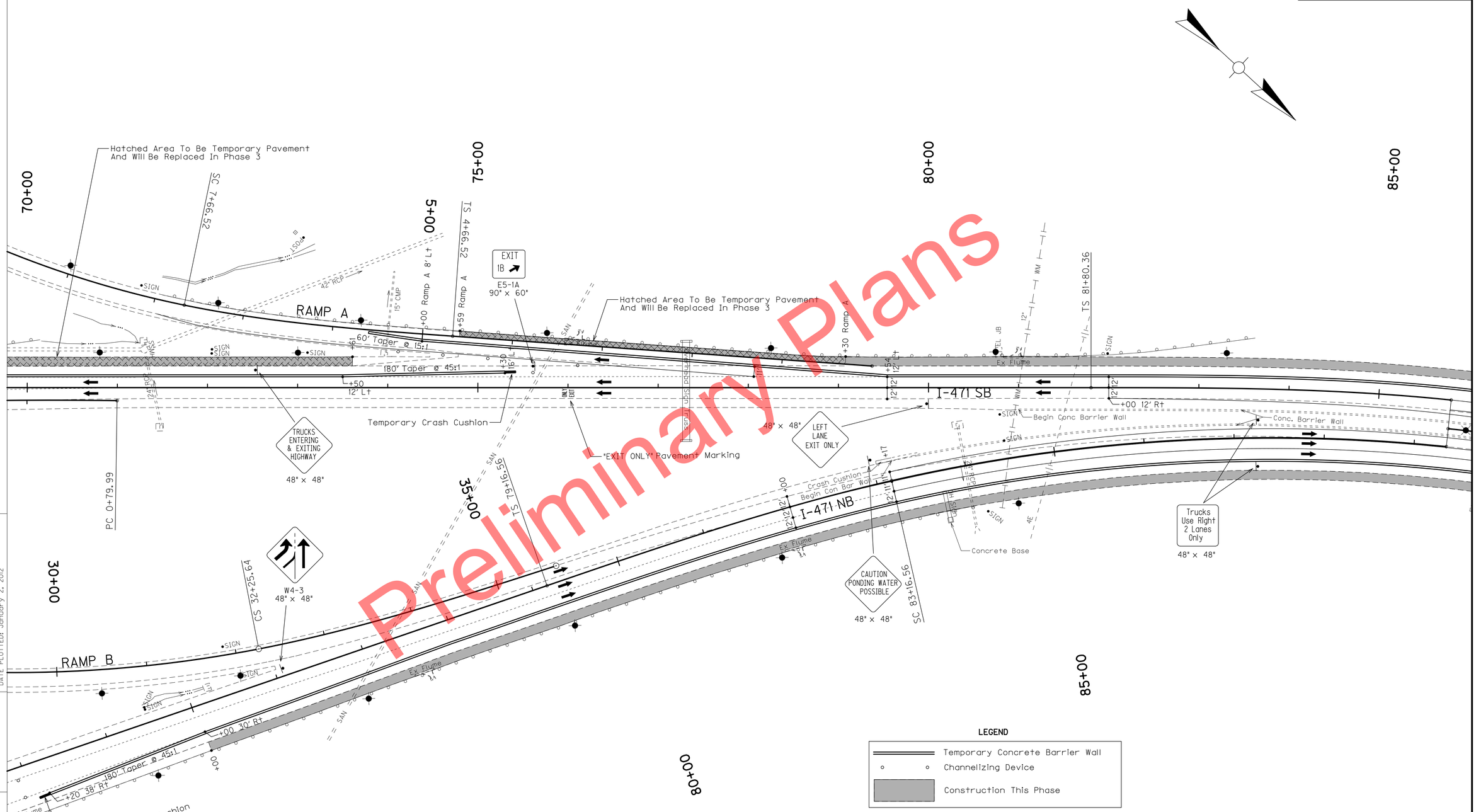

LEGEND

═══	Temporary Concrete Barrier Wall
○ ○	Channelizing Device
▒	Construction This Phase

SIGNS WILL BE COVERED, REMOVED, STORED, OR PLACED AS DIRECTED BY THE ENGINEER.

SCALE: 1"= 50'

MAINTENANCE OF TRAFFIC PLAN
PHASE 1
I-471 SB STA 70+00 TO STA 85+00

FILE NAME: P:\CIVIL\I471\6-2021.00\CONTRACT PLANS AND PROPOSAL\CONTRACT PLAN SET\ROADWAY\R176OOMT.DGN
USER: tvonbehren
DATE PLOTTED: January 2, 2012
E-SHEET NAME:
MicroStation v8.11.7.443

COUNTY OF	ITEM NO.	SHEET NO.
CAMPBELL	6-2021.00	RI77

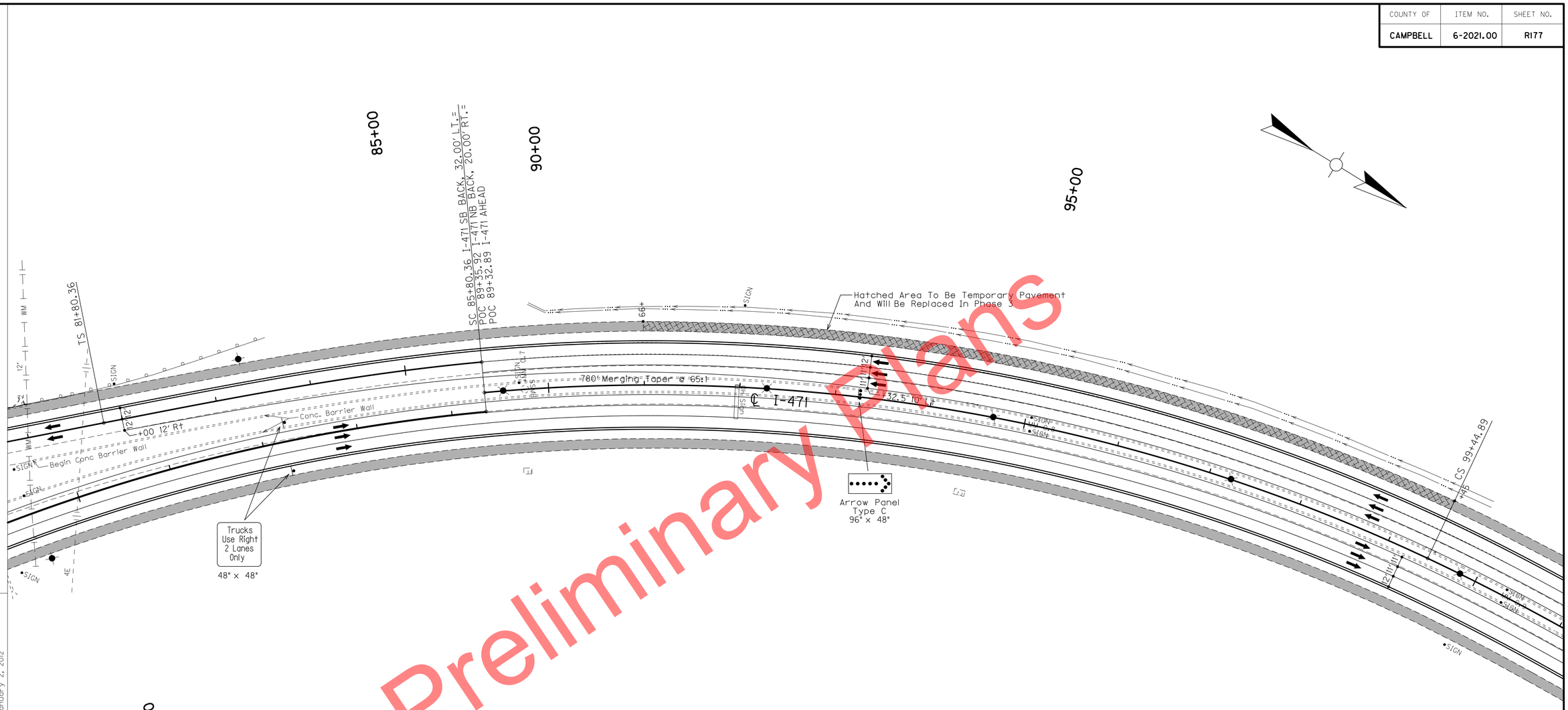

Preliminary Plans

LEGEND

- Temporary Concrete Barrier Wall
- Channelizing Device
- Construction This Phase

SIGNS WILL BE COVERED, REMOVED, STORED, OR PLACED AS DIRECTED BY THE ENGINEER.

SCALE: 1"= 50'

MAINTENANCE OF TRAFFIC PLAN - PHASE 1

I-471 NB STA 85+00 TO STA 89+35.95
I-471 SB STA 85+00 TO STA 85+80.36
I-471 STA 89+32.89 TO STA 100+00

MicroStation v8.11.7.443
E-SHEET NAME:
USER: tvonbehren
DATE PLOTTED: January 2, 2012
FILE NAME: P:\CIVIL\471\16-2021.00\CONTRACT PLANS AND PROPOSAL\CONTRACT PLAN SET\ROADWAY\RI77OOMT.DGN

COUNTY OF	ITEM NO.	SHEET NO.
CAMPBELL	6-2021.00	R178

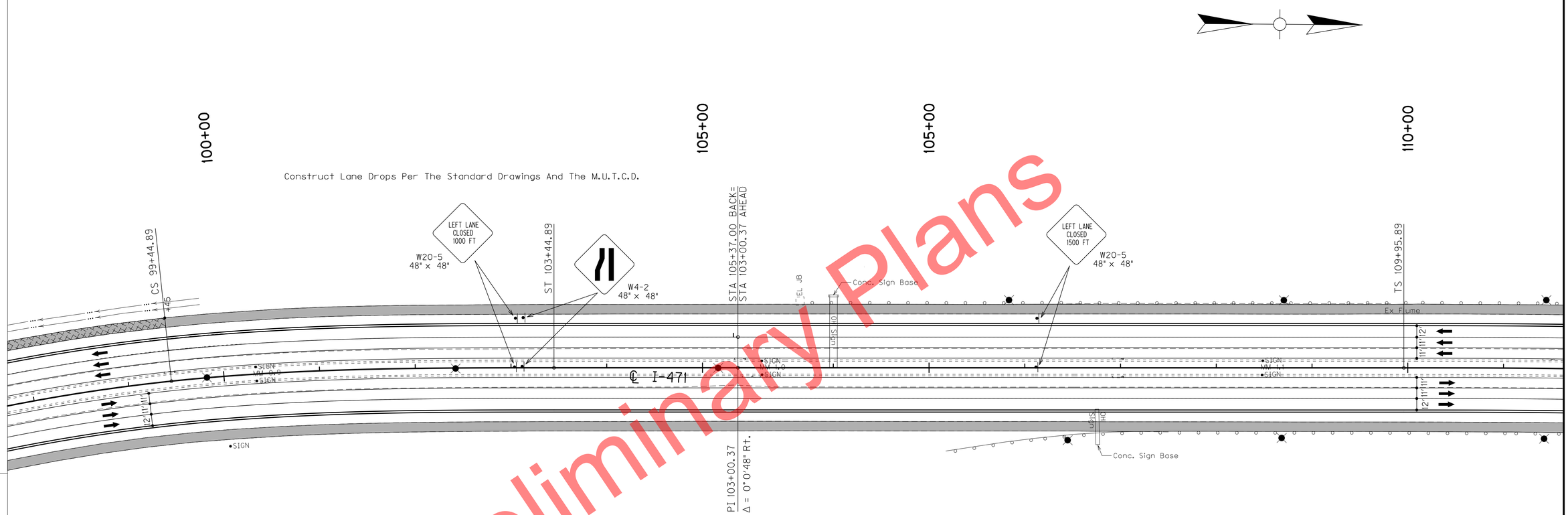

LEGEND

═══	Temporary Concrete Barrier Wall
○ ○	Channelizing Device
▒	Construction This Phase

SIGNS WILL BE COVERED, REMOVED, STORED, OR PLACED AS DIRECTED BY THE ENGINEER.

SCALE: 1"= 50'

MAINTENANCE OF TRAFFIC PLAN
PHASE 1
I-471 STA 100+00 TO STA 110+00

FILE NAME: P:\CIVIL\I471\6-2021.00\CONTRACT PLANS AND PROPOSAL\CONTRACT PLAN SET\ROADWAY\R178OOMT.DGN

USER: tvonbehren
DATE PLOTTED: January 2, 2012

E-SHEET NAME:

MicroStation v8.11.7.443

COUNTY OF	ITEM NO.	SHEET NO.
CAMPBELL	6-2021.00	R179

FILE NAME: P:\CIVIL\147\N6-2021.00\CONTRACT PLANS AND PROPOSAL\CONTRACT PLAN SET\ROADWAY\R179OOMT.DGN
USER: tvonbehren
DATE PLOTTED: January 2, 2012
E-SHEET NAME:
MicroStation v8.11.7.443

110+00

115+00

120+00

SC 113+45.89

Conc. Sign Base

Ex Flume

LEFT LANE CLOSED 1/2 MILE

W20-5 48" x 48"

+90 44' Lt

℄ I-471

780' Merging Taper @ 65:1

Concrete Sign Base

TRUCKS ENTERING & EXITING HIGHWAY

48" x 48"

Preliminary Plans

LEGEND

- Temporary Concrete Barrier Wall
- Channelizing Device
- Construction This Phase

SIGNS WILL BE COVERED, REMOVED, STORED, OR PLACED AS DIRECTED BY THE ENGINEER.

SCALE: 1"= 50'

MAINTENANCE OF TRAFFIC PLAN
PHASE 1
I-471 STA 110+00 TO STA 125+00

COUNTY OF	ITEM NO.	SHEET NO.
CAMPBELL	6-2021.00	R180

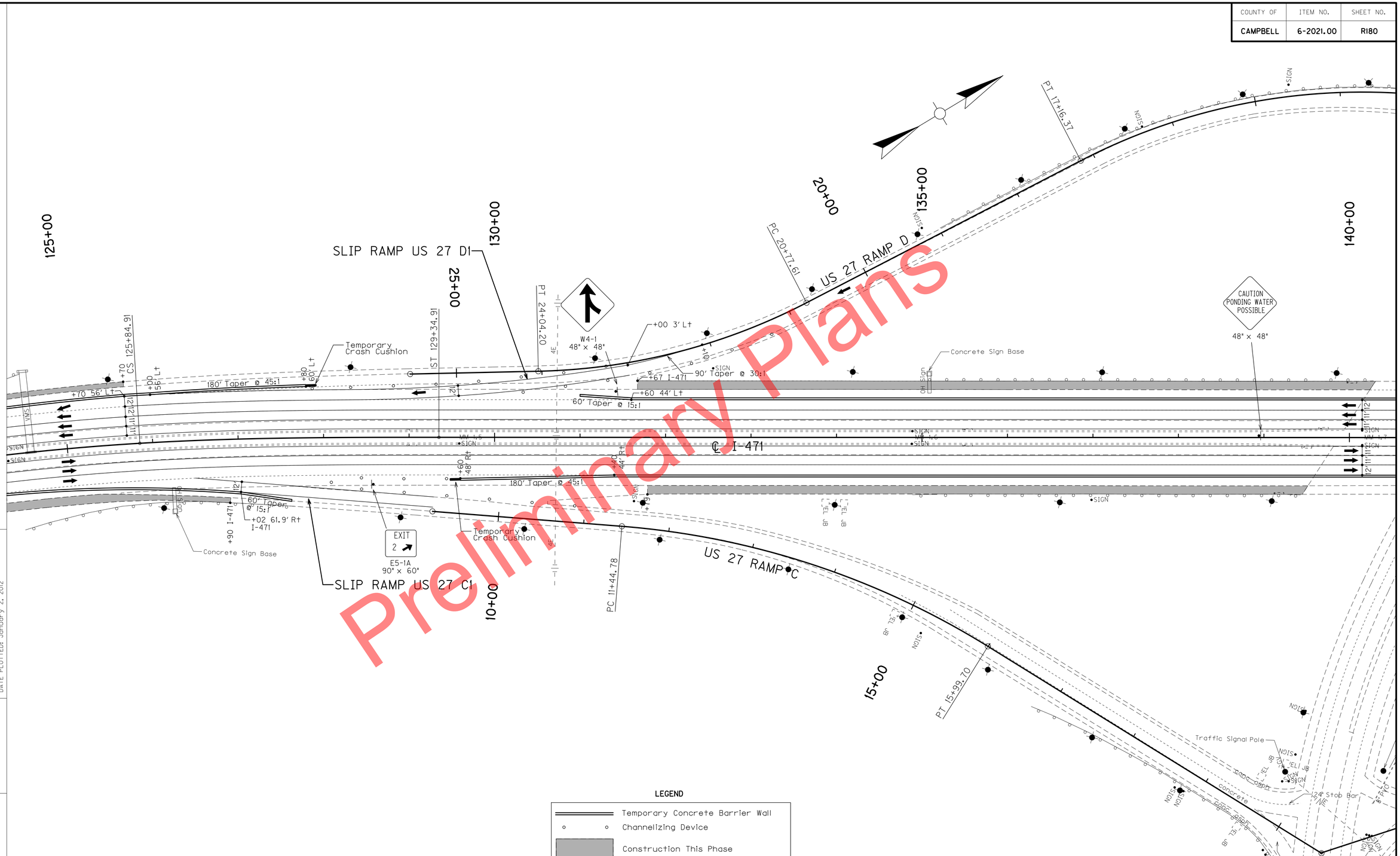

Preliminary Plans

LEGEND

	Temporary Concrete Barrier Wall
	Channelizing Device
	Construction This Phase

SIGNS WILL BE COVERED, REMOVED, STORED, OR PLACED AS DIRECTED BY THE ENGINEER.

SCALE: 1"= 50'

MAINTENANCE OF TRAFFIC PLAN
PHASE 1
I-471 STA 125+00 TO STA 140+00

FILE NAME: P:\CIVIL\I471\6-2021.00\CONTRACT PLANS AND PROPOSAL\CONTRACT PLAN SET\ROADWAY\R180OOMT.DGN

USER: tvonbehren
DATE PLOTTED: January 2, 2012

E-SHEET NAME:

MicroStation v8.11.7.443

COUNTY OF	ITEM NO.	SHEET NO.
CAMPBELL	6-2021.00	R181

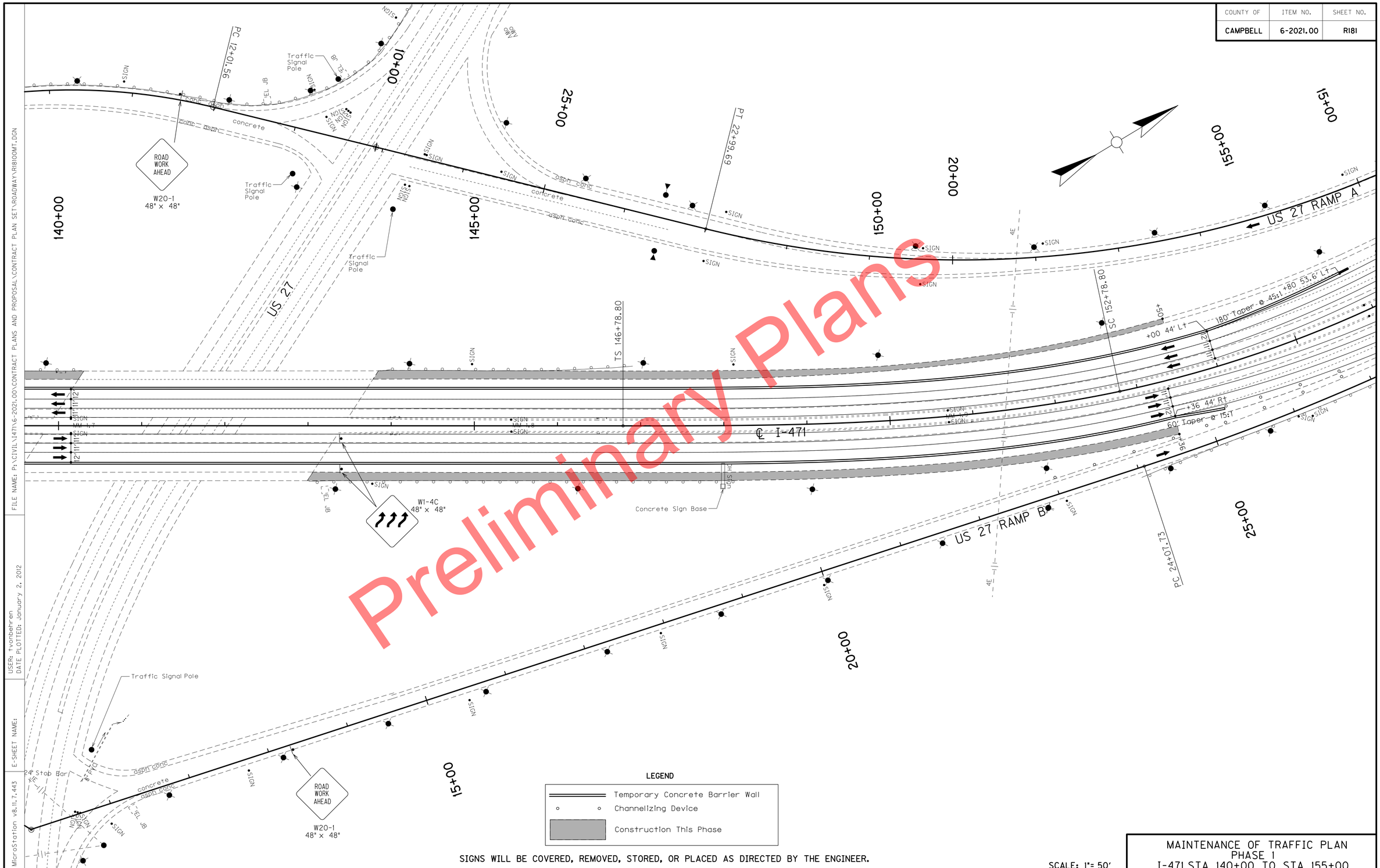

Preliminary Plans

SIGNS WILL BE COVERED, REMOVED, STORED, OR PLACED AS DIRECTED BY THE ENGINEER.

SCALE: 1"= 50'

MAINTENANCE OF TRAFFIC PLAN
PHASE 1
I-471 STA 140+00 TO STA 155+00

FILE NAME: P:\CIVIL\I471\6-2021.00\CONTRACT PLANS AND PROPOSAL\CONTRACT PLAN SET\ROADWAY\R181OOMT.DGN

USER: tvonbehren
DATE PLOTTED: January 2, 2012

E-SHEET NAME:

MicroStation v8.11.7.443

COUNTY OF	ITEM NO.	SHEET NO.
CAMPBELL	6-2021.00	R182

Preliminary Plans

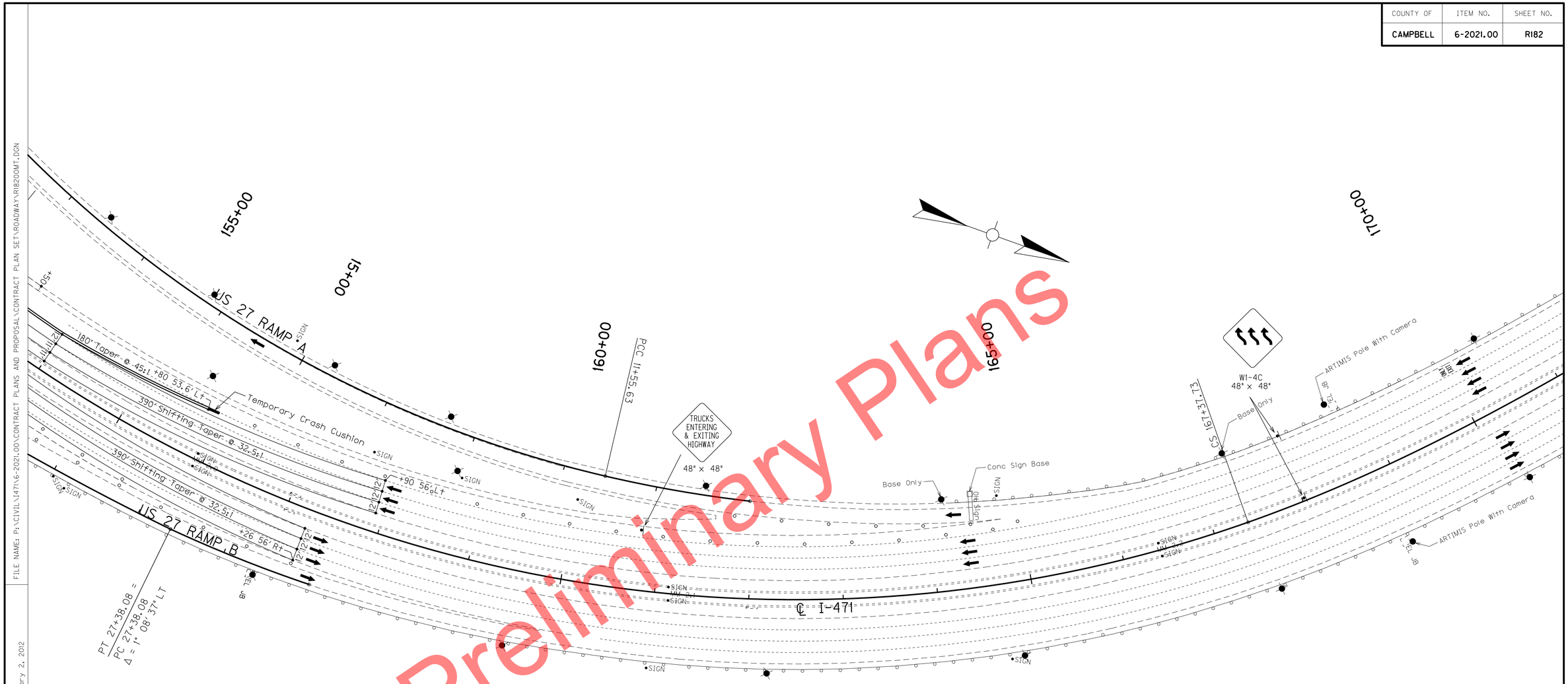

LEGEND

- Temporary Concrete Barrier Wall
- Channelizing Device
- Construction This Phase

SIGNS WILL BE COVERED, REMOVED, STORED, OR PLACED AS DIRECTED BY THE ENGINEER.

SCALE: 1"= 50'

MAINTENANCE OF TRAFFIC PLAN
PHASE 1
I-471 STA 155+00 TO STA 170+00

MicroStation v8.11.7.443
E-SHEET NAME:
USER: tvonbehren
DATE PLOTTED: January 2, 2012
FILE NAME: P:\CIVIL\147\N6-2021.00\CONTRACT PLANS AND PROPOSAL\CONTRACT PLAN SET\ROADWAY\R182OOMT.DGN

COUNTY OF	ITEM NO.	SHEET NO.
CAMPBELL	6-2021.00	R183

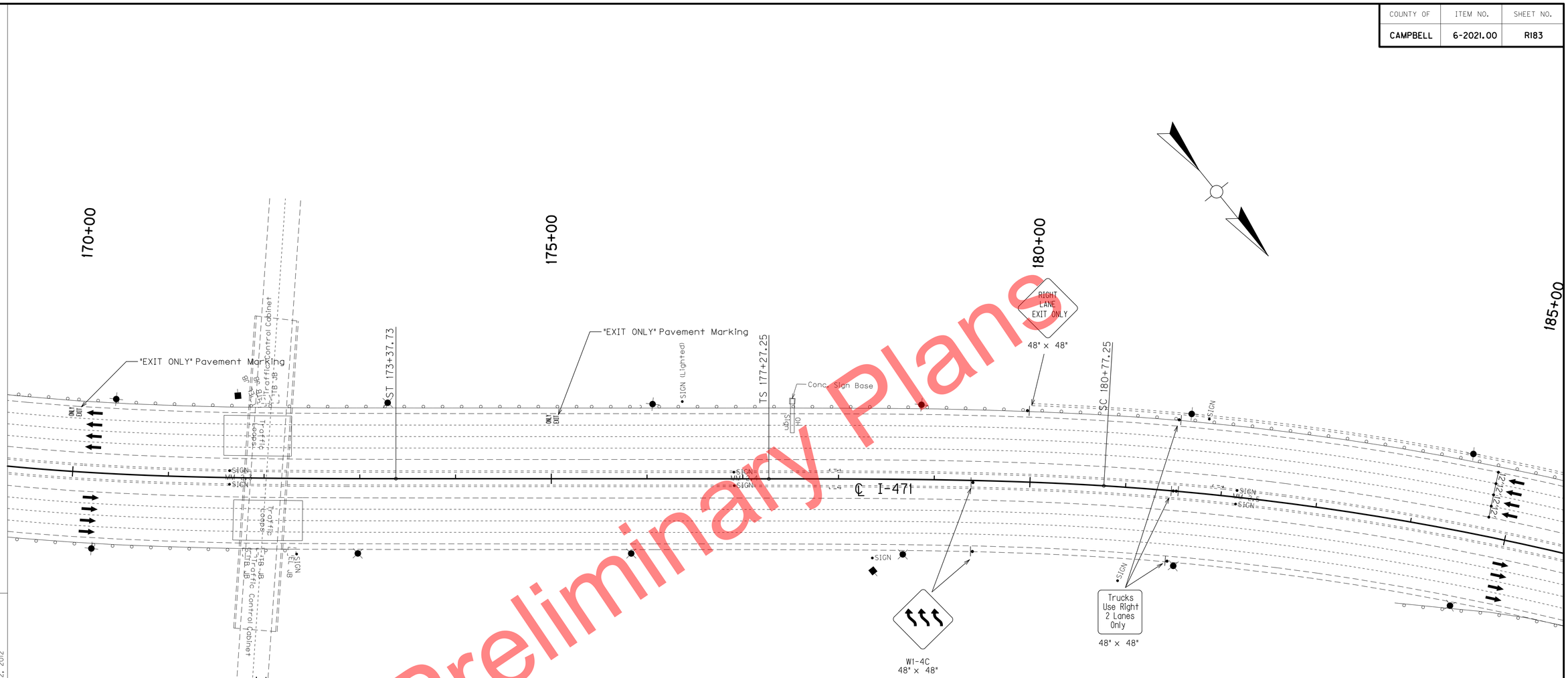

Preliminary Plans

LEGEND

- Temporary Concrete Barrier Wall
- Channelizing Device
- Construction This Phase

SIGNS WILL BE COVERED, REMOVED, STORED, OR PLACED AS DIRECTED BY THE ENGINEER.

SCALE: 1"= 50'

MAINTENANCE OF TRAFFIC PLAN
PHASE 1
I-471 STA 170+00 TO STA 185+00

FILE NAME: P:\CIVIL\471N\6-2021.00\CONTRACT PLANS AND PROPOSAL\CONTRACT PLAN SET\ROADWAY\R183OOMT.DGN
USER: tvonbehren
DATE PLOTTED: January 2, 2012
E-SHEET NAME:
MicroStation v8.11.7.443

COUNTY OF	ITEM NO.	SHEET NO.
CAMPBELL	6-2021.00	R184

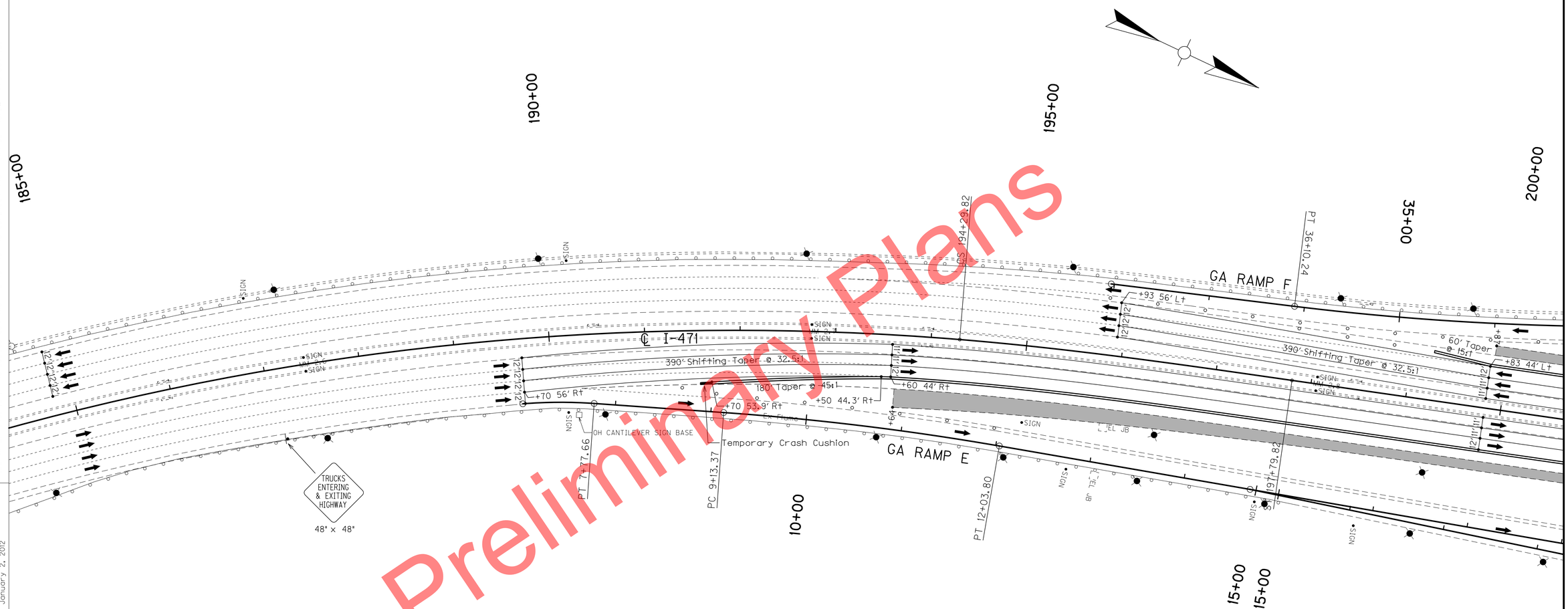

Preliminary Plans

LEGEND

═══	Temporary Concrete Barrier Wall
○ ○	Channelizing Device
▒	Construction This Phase

SIGNS WILL BE COVERED, REMOVED, STORED, OR PLACED AS DIRECTED BY THE ENGINEER.

SCALE: 1"= 50'

MAINTENANCE OF TRAFFIC PLAN
PHASE 1
I-471 STA 185+00 TO STA 200+00

FILE NAME: P:\CIVIL\I471\6-2021.00\CONTRACT PLANS AND PROPOSAL\CONTRACT PLAN SET\ROADWAY\R184OOMT.DGN

USER: tvonbehren
DATE PLOTTED: January 2, 2012

E-SHEET NAME:

MicroStation v8.11.7.443

COUNTY OF	ITEM NO.	SHEET NO.
CAMPBELL	6-2021.00	R185

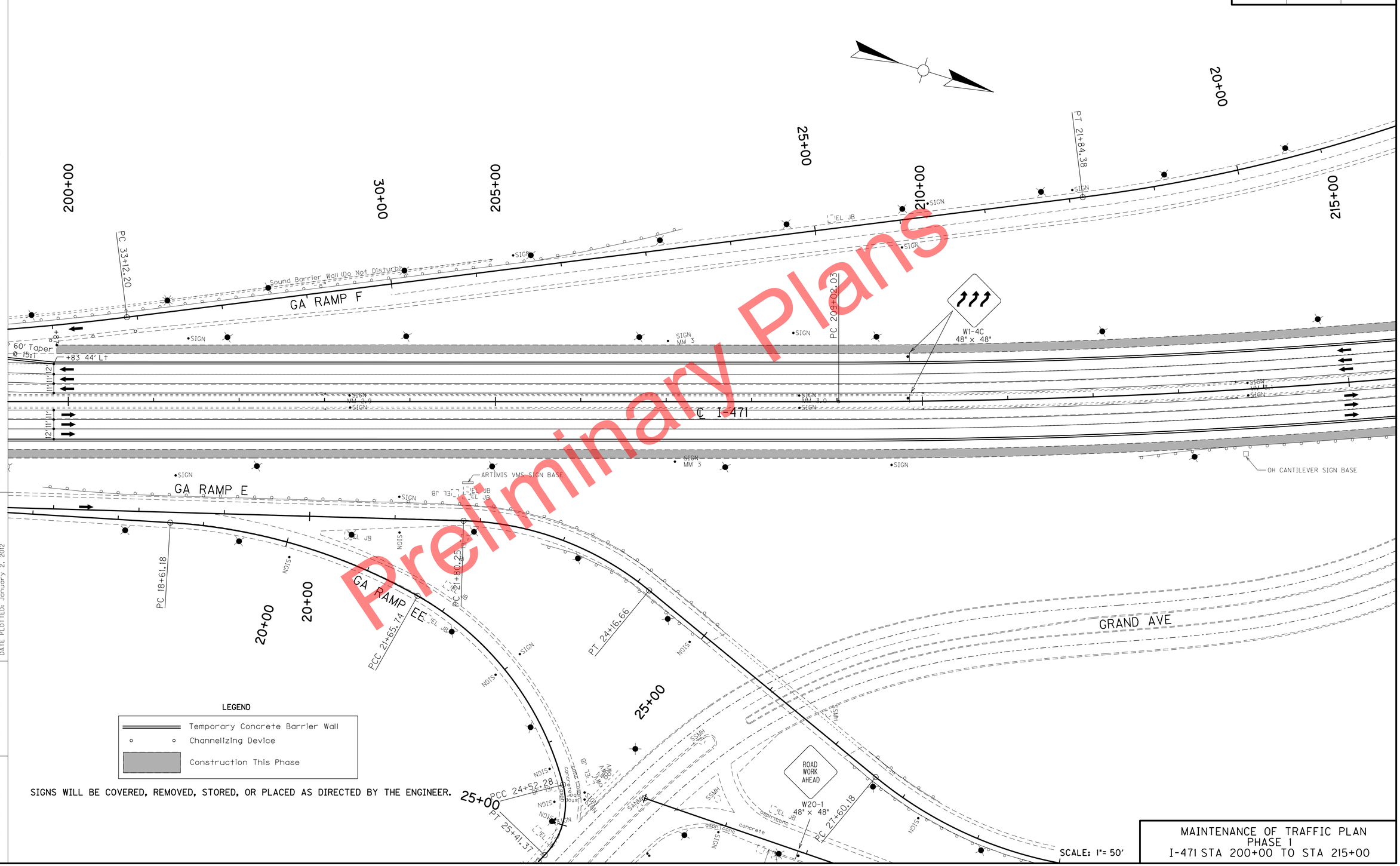

LEGEND

- Temporary Concrete Barrier Wall
- Channelizing Device
- Construction This Phase

SIGNS WILL BE COVERED, REMOVED, STORED, OR PLACED AS DIRECTED BY THE ENGINEER.

MAINTENANCE OF TRAFFIC PLAN
PHASE 1
I-471 STA 200+00 TO STA 215+00

Preliminary Plans

FILE NAME: P:\CIVIL\I471\6-2021.00\CONTRACT PLANS AND PROPOSAL\CONTRACT PLAN SET\ROADWAY\R185OOMT.DGN
USER: tvonbehren
DATE PLOTTED: January 2, 2012
E-SHEET NAME:
MicroStation v8.11.7.443

COUNTY OF	ITEM NO.	SHEET NO.
CAMPBELL	6-2021.00	R186

Preliminary Plans

ROAD WORK AHEAD
W20-1
48" x 48"

GA RAMP F
GA RAMP K
GA RAMP H
GRAND AVE
℄ I-471

215+00
220+00
225+00
230+00
15+00
45+00
10+00
40+00
35+00
30+00
25+00

PC 17+00.59
PT 47+47.74
PC 42+17.98
PT 216+90.85
PC 11+40.65
PT 14+20.28
PC 24+05.70
PT 35+36.68
PT 30+13.44

Conc. Sign Base
OH CANTILEVER SIGN BASE
Traffic Signal Pole
CAUTION PONDING WATER POSSIBLE
48" x 48"
EXIT 3
E5-1A
90" x 60"
W4-1
48" x 48"

+40 44' Lt
+15 44' Rt
+15 I-471
+67.4 I-471
+80 57.3 Lt
540' Taper @ 45:1
60' Taper @ 15:1
120' Taper @ 40:1
+00 3' Lt
Ramp GA K

Concrete Barrier Wall (Do Not Disturb)
End Conc Barrier Wall
SLIP RAMP GA K1

Traffic Loops

LEGEND

- Temporary Concrete Barrier Wall
- Channelizing Device
- Construction This Phase

SIGNS WILL BE COVERED, REMOVED, STORED, OR PLACED AS DIRECTED BY THE ENGINEER.

SCALE: 1"= 50'

MAINTENANCE OF TRAFFIC PLAN
PHASE 1
I-471 STA 215+00 TO STA 230+00

MicroStation v8.11.7.443
E-SHEET NAME:
USER: tvonbehren
DATE PLOTTED: January 2, 2012
FILE NAME: P:\CIVIL\147\N6-2021.00\CONTRACT PLANS AND PROPOSAL\CONTRACT PLAN SET\ROADWAY\R186OMT.DGN

COUNTY OF	ITEM NO.	SHEET NO.
CAMPBELL	6-2021.00	R187

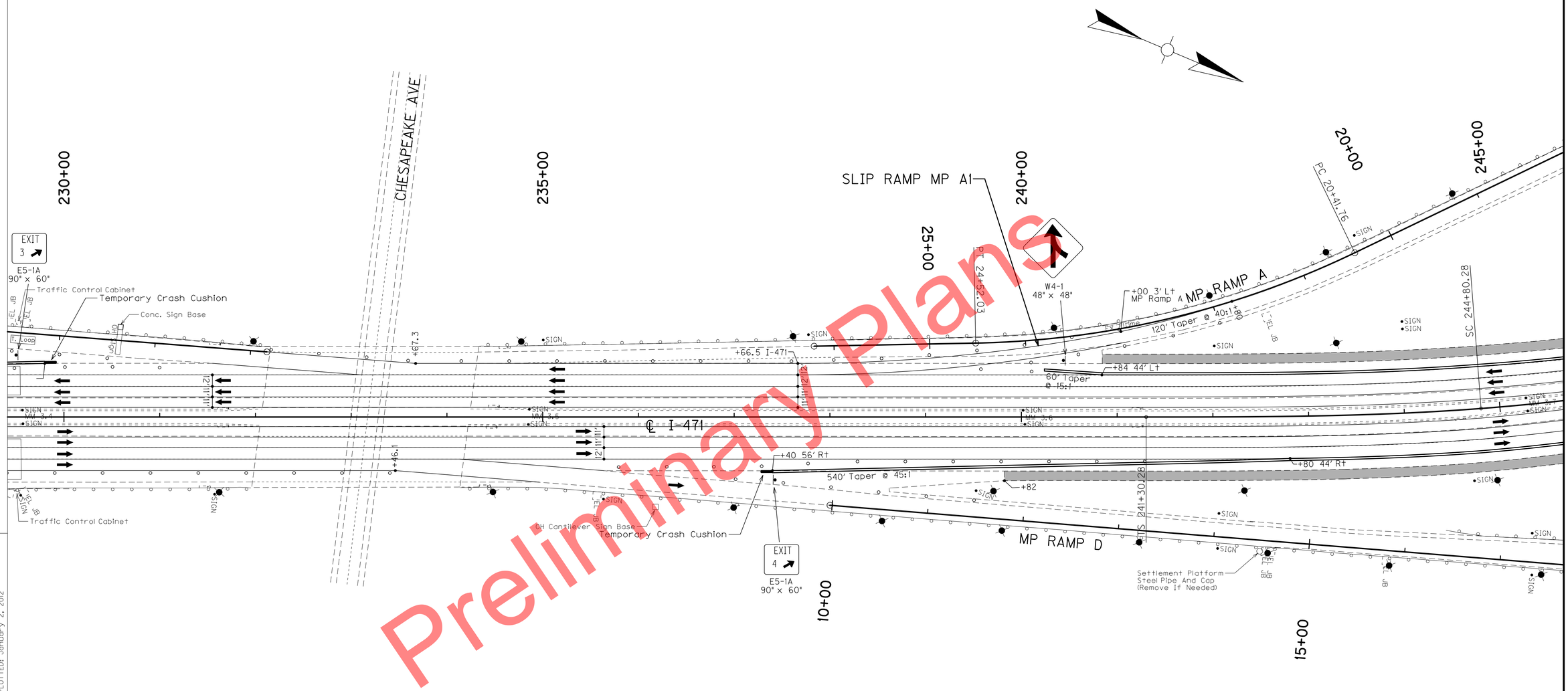

Preliminary Plans

LEGEND

═══	Temporary Concrete Barrier Wall
○ ○	Channelizing Device
▒	Construction This Phase

SIGNS WILL BE COVERED, REMOVED, STORED, OR PLACED AS DIRECTED BY THE ENGINEER.

SCALE: 1"= 50'

MAINTENANCE OF TRAFFIC PLAN
PHASE 1
I-471 STA 230+00 TO STA 245+00

FILE NAME: P:\CIVIL\I471\6-2021.00\CONTRACT PLANS AND PROPOSAL\CONTRACT PLAN SET\ROADWAY\R187OOMT.DGN
USER: tvonbehren
DATE PLOTTED: January 2, 2012
E-SHEET NAME:
MicroStation v8.11.7.443

COUNTY OF	ITEM NO.	SHEET NO.
CAMPBELL	6-2021.00	R188

Preliminary Plans

ROAD WORK AHEAD
W20-1
48" x 48"

MP RAMP A
MEMORIAL PARKWAY
MP RAMP N
MP RAMP M
SLIP RAMP MP M1
CSX RAILROAD
℄ I-471

Face Memorial Parkway Bridge Abutment
Concrete Slope Wall
Face CSX RR Bridge Abutment
ARTIMIS Pole with Camera
Traffic Signal Pole
Traffic Loops
Remove Island (Pave Flush)
Traffic Control Cabinet

SC 244+80.28
CS 252+63.48
PC 13+08.09
PT 15+30.61
256+13.48
PC 12+72.58
PT 15+82.36
PC 17+49.62
PT 19+62.53

+50 37.25' Rt
+50 37.25' Lt
+25 37.25' Lt
+00 3.25' Rt
+30 44.9' Lt
+02 3.6' Rt
+92 49.25' Rt I-471
+47 I-471
180' Taper
60' Taper @ 15:1
120' Taper @ 40:1
400 3' Lt Ramp MP M

W4-1
48" x 48"

LEGEND

- Temporary Concrete Barrier Wall
- Channelizing Device
- Construction This Phase

SIGNS WILL BE COVERED, REMOVED, STORED, OR PLACED AS DIRECTED BY THE ENGINEER.

SCALE: 1"= 50'

MAINTENANCE OF TRAFFIC PLAN
PHASE 1
I-471 STA 245+00 TO STA 260+00

FILE NAME: P:\CIVIL\147\N6-2021.00\CONTRACT PLANS AND PROPOSAL\CONTRACT PLAN SET\ROADWAY\R188OOMT.DGN
USER: tvonbehren
DATE PLOTTED: January 2, 2012
E-SHEET NAME:
MicroStation v8.11.7.443

COUNTY OF	ITEM NO.	SHEET NO.
CAMPBELL	6-2021.00	R189

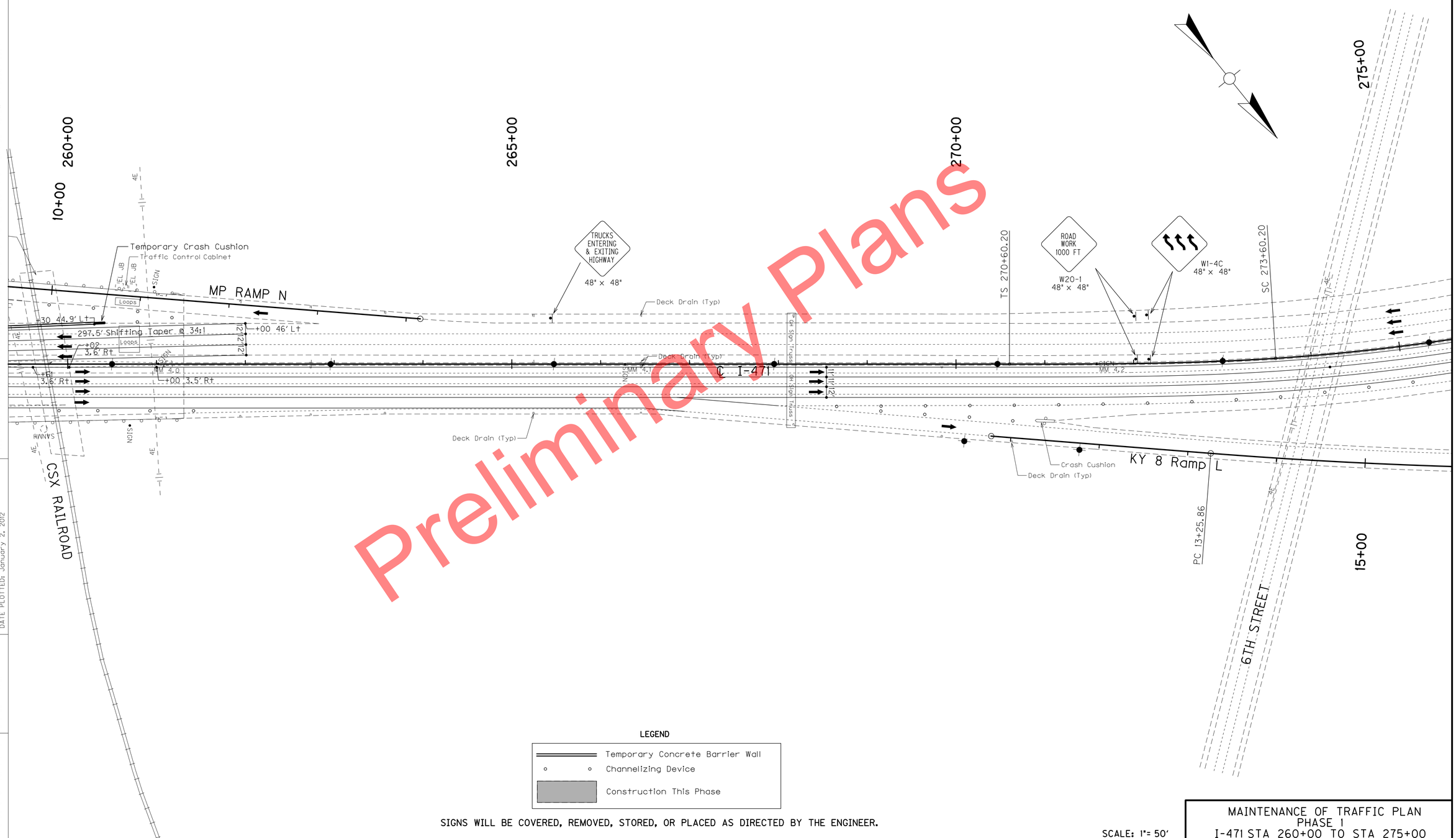

LEGEND

═══	Temporary Concrete Barrier Wall
○ ○	Channelizing Device
▒	Construction This Phase

SIGNS WILL BE COVERED, REMOVED, STORED, OR PLACED AS DIRECTED BY THE ENGINEER.

SCALE: 1"= 50'

MAINTENANCE OF TRAFFIC PLAN
PHASE 1
I-471 STA 260+00 TO STA 275+00

FILE NAME: P:\CIVIL\I471\6-2021.00\CONTRACT PLANS AND PROPOSAL\CONTRACT PLAN SET\ROADWAY\R18900MT.DGN

USER: tvonbehren
DATE PLOTTED: January 2, 2012

E-SHEET NAME:

MicroStation v8.11.7.443

COUNTY OF	ITEM NO.	SHEET NO.
CAMPBELL	6-2021.00	R190

LEGEND

- Temporary Concrete Barrier Wall
- Channelizing Device
- Construction This Phase

SIGNS WILL BE COVERED, REMOVED, STORED, OR PLACED AS DIRECTED BY THE ENGINEER.

Preliminary Plans

275+00 PT 30+23.69 30+00 280+00 25+00 CS 283+08.99 PCC 23+60.68 285+00 PC 21+24.11 PT 21+09.50 20+00 PC 17+44.53 290+00 PC 289+32.76

ROAD WORK 1500 FT
W20-1 48" x 48"

ROAD WORK 1/2 MILE
W20-1 48" x 48"

W4-1 48" x 48"

Barrier Wall
End of Bridge - Never Used Up In Air

Control Cabinet
ARTIMIS Jct. Box
KY 8 RAMP K
ARTIMIS Jct. Box
Traffic Loops
SIGN
SIGN
SIGN

COUNTY OF	ITEM NO.	SHEET NO.
CAMPBELL	6-2021.00	R191

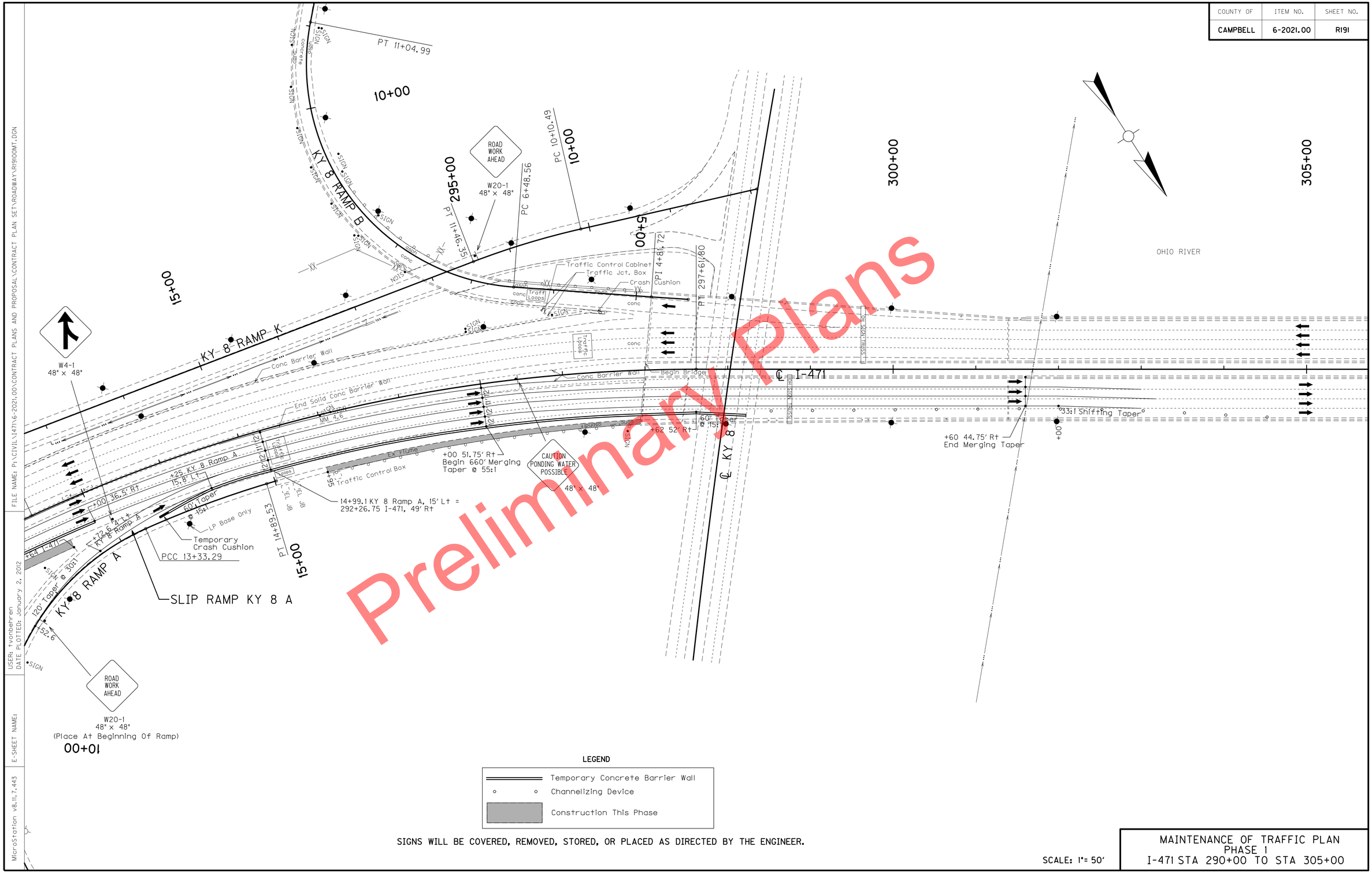

LEGEND

═══	Temporary Concrete Barrier Wall
○ ○	Channelizing Device
▒	Construction This Phase

SIGNS WILL BE COVERED, REMOVED, STORED, OR PLACED AS DIRECTED BY THE ENGINEER.

SCALE: 1"= 50'

MAINTENANCE OF TRAFFIC PLAN
PHASE 1
I-471 STA 290+00 TO STA 305+00

FILE NAME: P:\CIVIL\I471\6-2021.00\CONTRACT PLANS AND PROPOSAL\CONTRACT PLAN SET\ROADWAY\R191OOMT.DGN
USER: tvonbehren
DATE PLOTTED: January 2, 2012
E-SHEET NAME:
MicroStation v8.11.7.443

COUNTY OF	ITEM NO.	SHEET NO.
CAMPBELL	6-2021.00	R192

305+00

310+00

315+00

320+00

OHIO RIVER

STA 314+45 END ARCH SPAN
END CONSTRUCTION

℄ I-471

END
ROAD WORK
G20-2
48" x 24"

Preliminary Plans

LEGEND

- Temporary Concrete Barrier Wall
- Channelizing Device
- Construction This Phase

SIGNS WILL BE COVERED, REMOVED, STORED, OR PLACED AS DIRECTED BY THE ENGINEER.

SCALE: 1"= 50'

MAINTENANCE OF TRAFFIC PLAN
PHASE 1
I-471 STA 305+00 TO OHIO SIGNING

FILE NAME: P:\CIVIL\147\N6-2021.00\CONTRACT PLANS AND PROPOSAL\CONTRACT PLAN SET\ROADWAY\R192OMT.DGN
USER: tvonbehren
DATE PLOTTED: January 2, 2012
E-SHEET NAME:
MicroStation v8.11.7.443

COUNTY OF	ITEM NO.	SHEET NO.
CAMPBELL	6-2021.00	R193

320+00

325+00

US 50 (FT WASHINGTON WY)

ROAD WORK 1 MILE

W20-1
48" x 48"

Portable Changeable Message Sign At 1 Mile Prior To Begin Construction Or As Directed By The Engineer.

℄ I-471

I-471 SB

I-471 NB

END ROAD WORK

G20-2
48" x 24"

Preliminary Plans

LEGEND

- Temporary Concrete Barrier Wall
- Channelizing Device
- Construction This Phase

SIGNS WILL BE COVERED, REMOVED, STORED, OR PLACED AS DIRECTED BY THE ENGINEER.

SCALE: 1"= 50'

MAINTENANCE OF TRAFFIC PLAN
PHASE 1
I-471 OHIO SIGNING

FILE NAME: P:\CIVIL\471\6-2021.00\CONTRACT PLANS AND PROPOSAL\CONTRACT PLAN SET\ROADWAY\R193OOMT.DGN
USER: tvonbehren
DATE PLOTTED: January 2, 2012
E-SHEET NAME:
MicroStation v8.11.7.443

COUNTY OF	ITEM NO.	SHEET NO.
CAMPBELL	6-2021.00	R194

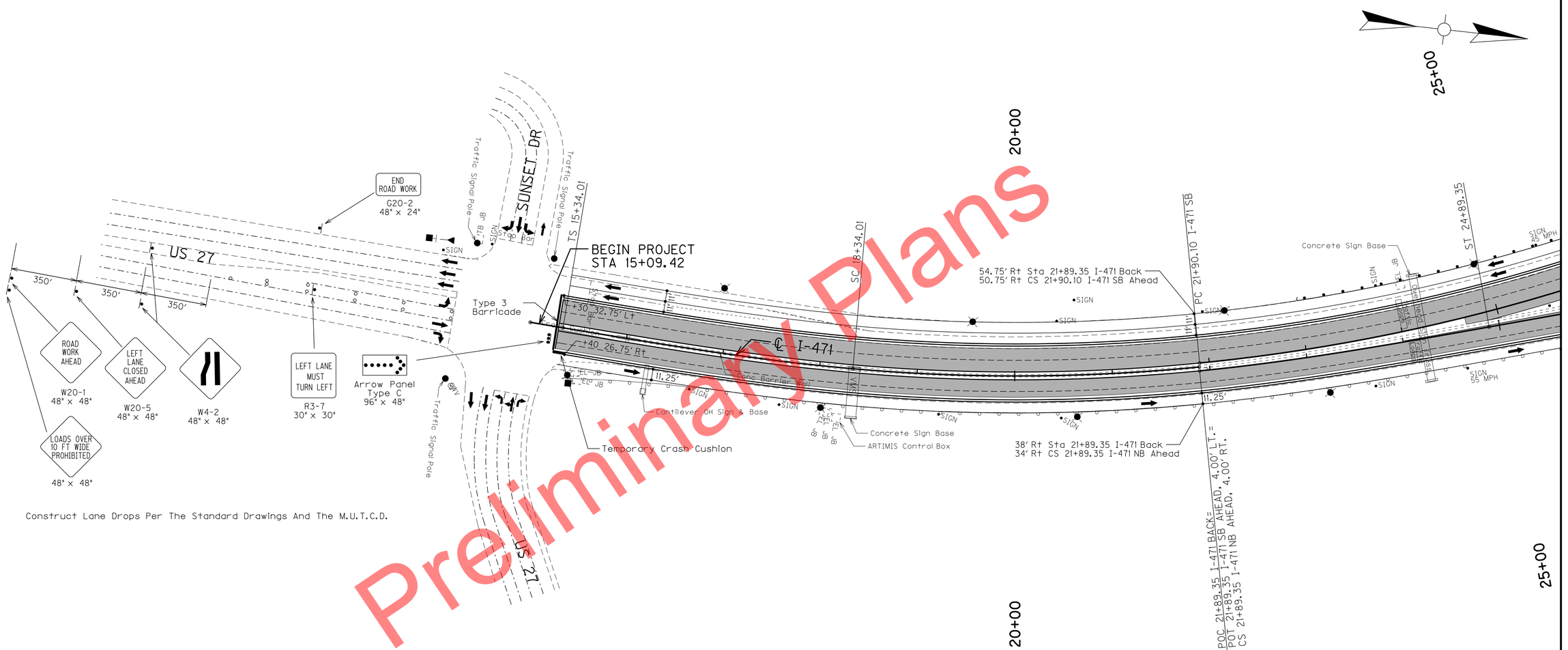

Preliminary Plans

Construct Lane Drops Per The Standard Drawings And The M.U.T.C.D.

LEGEND

- Temporary Concrete Barrier Wall
- Channelizing Device
- Construction This Phase

SIGNS WILL BE COVERED, REMOVED, STORED, OR PLACED AS DIRECTED BY THE ENGINEER.

SCALE: 1"= 50'

MAINTENANCE OF TRAFFIC PLAN PHASE 2
I-471 STA 15+30 TO STA 21+89.35
I-471 NB&SB STA 21+89.35 TO STA 25+00

FILE NAME: P:\CIVIL\471\6-2021.00\CONTRACT PLANS AND PROPOSAL\CONTRACT PLAN SET\ROADWAY\R194OMT.DGN
USER: tvonbehren
DATE PLOTTED: January 2, 2012
E-SHEET NAME:
MicroStation v8.11.7.443

COUNTY OF	ITEM NO.	SHEET NO.
CAMPBELL	6-2021.00	R195

NOTE:

Close Ramp D And Extend The Temporary Barrier Wall Through The Slip Ramp Area To Construct The Portion Of Roadway In That Area. See The Maintenance Of Traffic Notes For Ramp Closure Time. See The Maintenance Of Traffic Typical Sections For Location Of Temporary Barrier Wall.

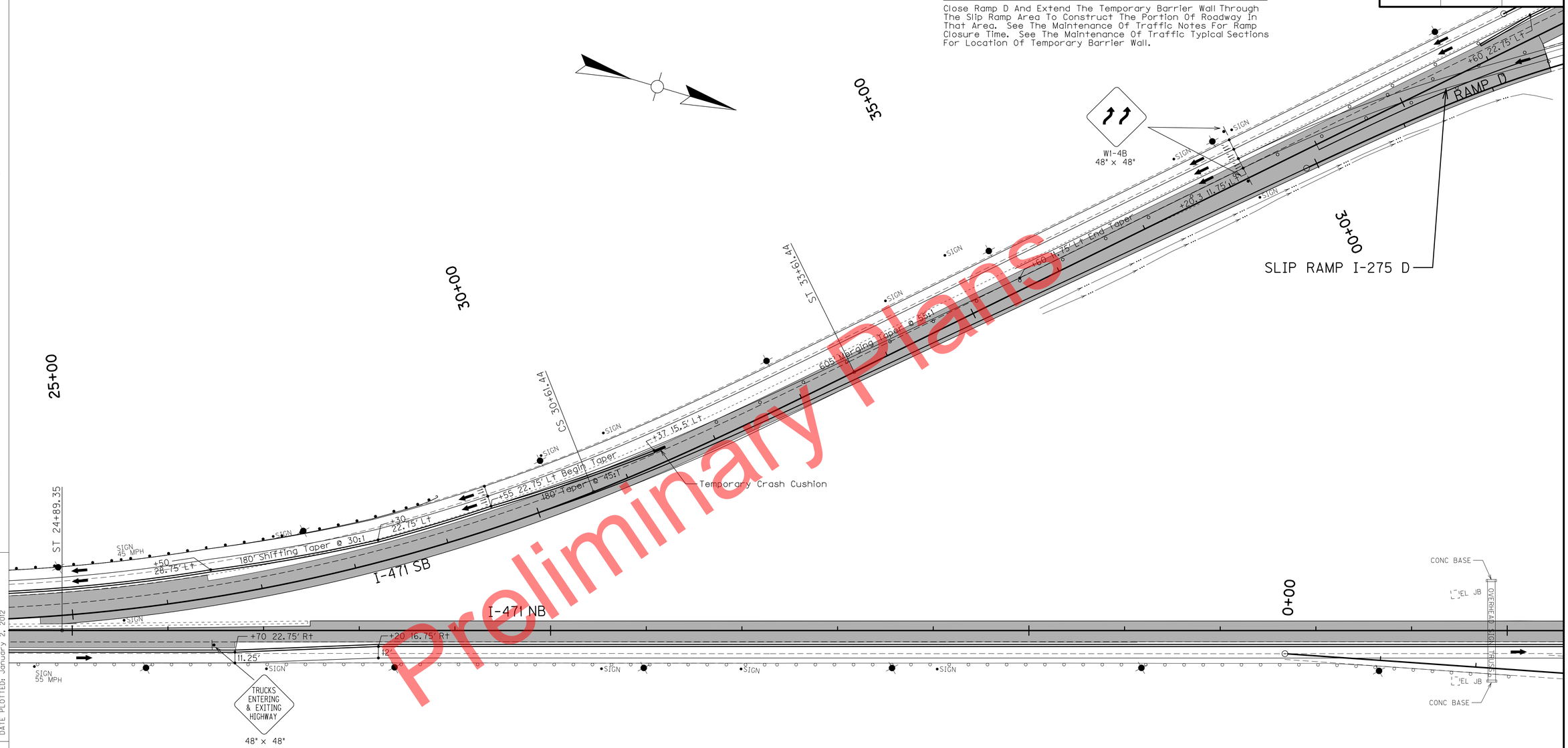

Preliminary Plans

LEGEND

- Temporary Concrete Barrier Wall
- Channelizing Device
- Construction This Phase

SIGNS WILL BE COVERED, REMOVED, STORED, OR PLACED AS DIRECTED BY THE ENGINEER.

SCALE: 1"= 50'

MAINTENANCE OF TRAFFIC PLAN-PHASE 2
I-471 NB STA 25+00 TO STA 40+00
I-471 SB STA 25+00 TO STA 40+00

FILE NAME: P:\CIVIL\471\6-2021.00\CONTRACT PLANS AND PROPOSAL\CONTRACT PLAN SET\ROADWAY\R195OOMT.DGN
USER: tvanbehren
DATE PLOTTED: January 2, 2012
E-SHEET NAME:
MicroStation v8.11.7.443

COUNTY OF	ITEM NO.	SHEET NO.
CAMPBELL	6-2021.00	R196

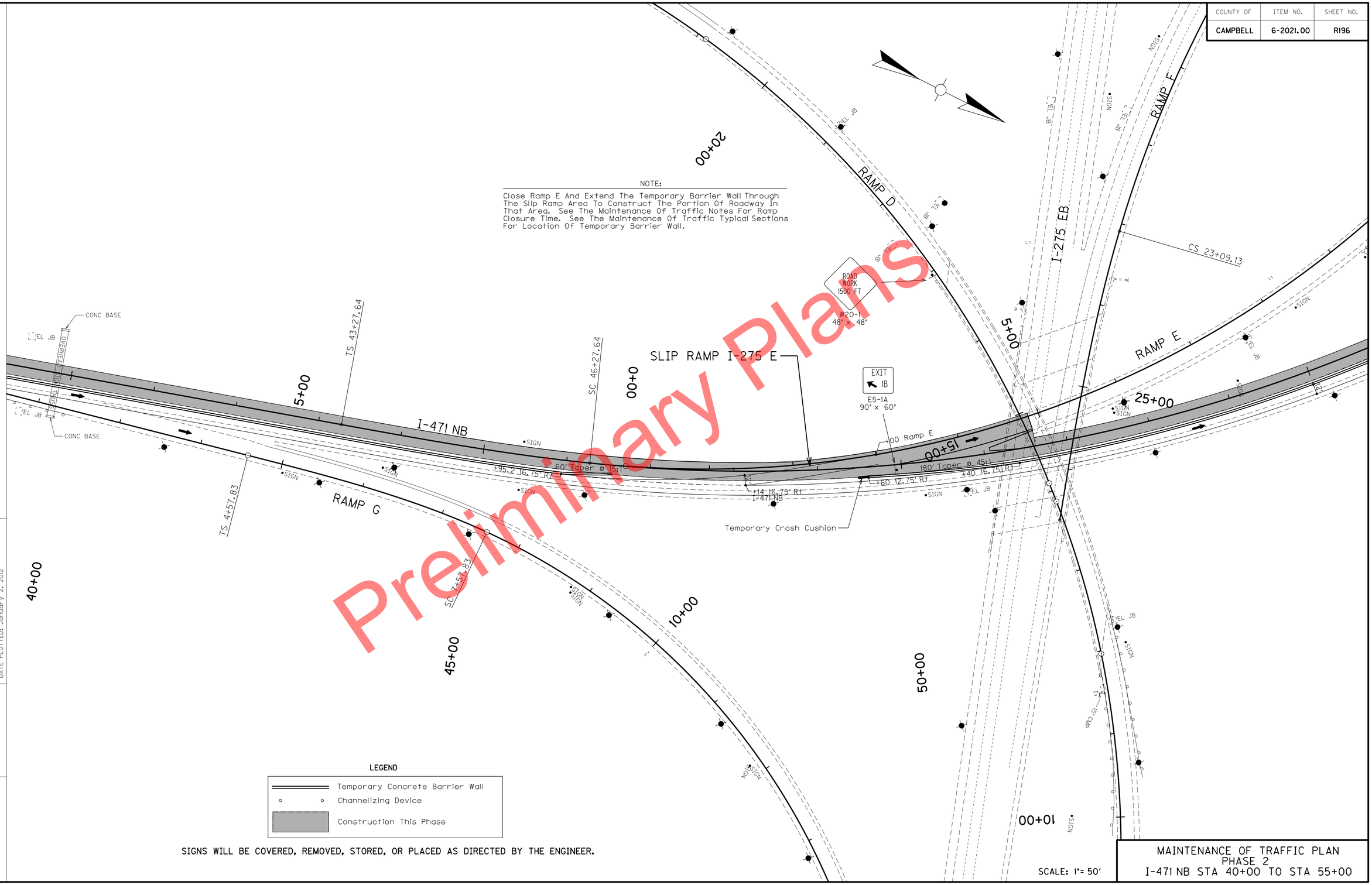

MAINTENANCE OF TRAFFIC PLAN
PHASE 2
I-471 NB STA 40+00 TO STA 55+00

FILE NAME: P:\CIVIL\1471\6-2021.00\CONTRACT PLANS AND PROPOSAL\CONTRACT PLAN SET\ROADWAY\R196OOMT.DGN
USER: tvonbehren
DATE PLOTTED: January 2, 2012
E-SHEET NAME:
MicroStation v8.11.7.443

COUNTY OF	ITEM NO.	SHEET NO.
CAMPBELL	6-2021.00	R197

LEGEND

- Temporary Concrete Barrier Wall
- Channelizing Device
- Construction This Phase

SIGNS WILL BE COVERED, REMOVED, STORED, OR PLACED AS DIRECTED BY THE ENGINEER.

① Place Sign At Distance Indicated On The Sign Relative To The Nearest Point Of Construction

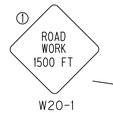



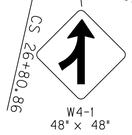

NOTE:

Close Ramp D And Extend The Temporary Barrier Wall Through The Slip Ramp Area To Construct The Portion Of Roadway In That Area. See The Maintenance Of Traffic Notes For Ramp Closure Time. See The Maintenance Of Traffic Typical Sections For Location Of Temporary Barrier Wall.

Preliminary Plans

MAINTENANCE OF TRAFFIC PLAN
PHASE 2
I-471 SB STA 40+00 TO STA 55+00

SCALE: 1"= 50'

MicroStation v8.11.7.443
E-SHEET NAME:
USER: tvonbehren
DATE PLOTTED: January 2, 2012
FILE NAME: P:\CIVIL\147\N6-2021.00\CONTRACT PLANS AND PROPOSAL\CONTRACT PLAN SET\ROADWAY\R197OOMT.DGN

COUNTY OF	ITEM NO.	SHEET NO.
CAMPBELL	6-2021.00	R198

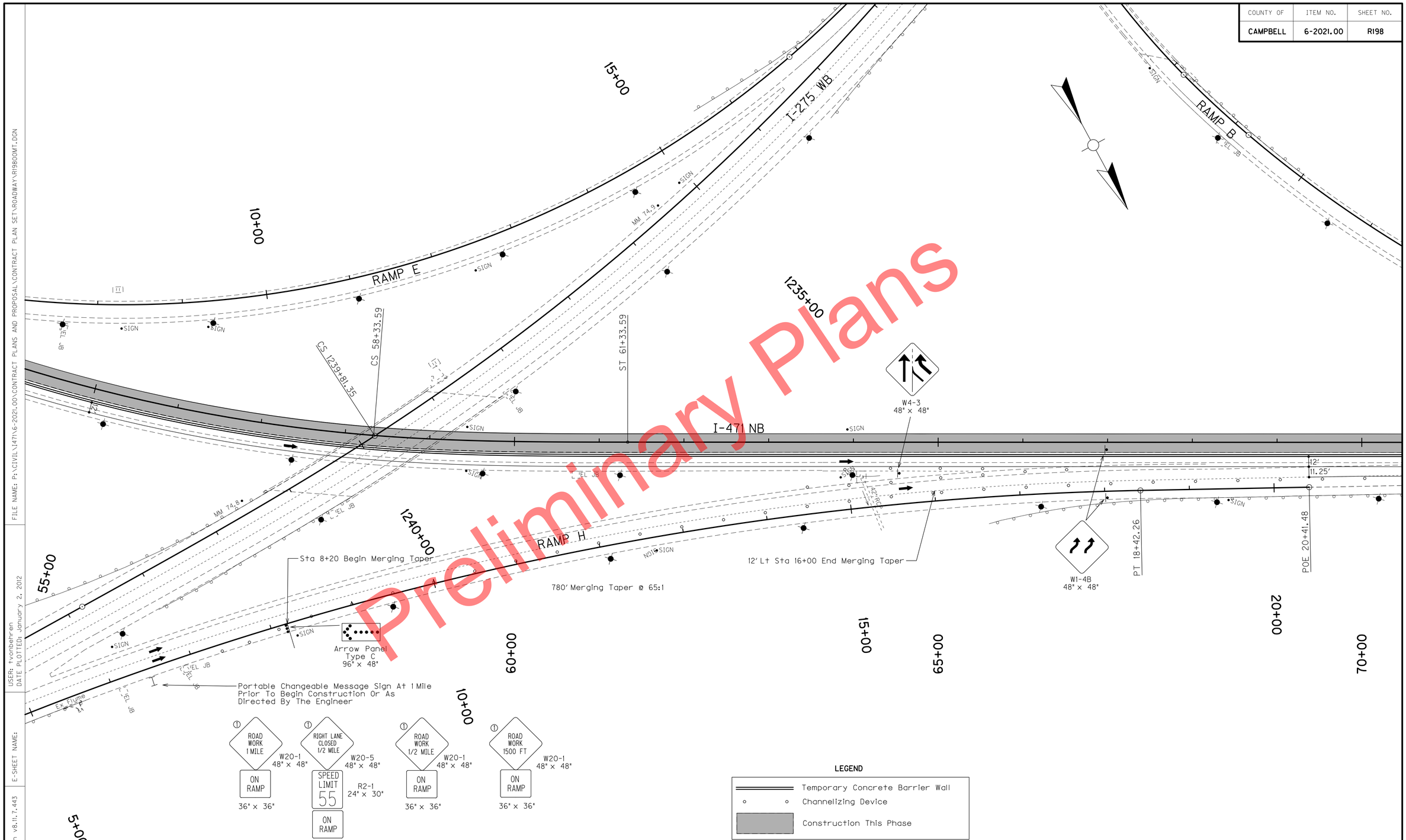

SIGNS WILL BE COVERED, REMOVED, STORED, OR PLACED AS DIRECTED BY THE ENGINEER.

SCALE: 1"= 50'

MAINTENANCE OF TRAFFIC PLAN
PHASE 2
I-471 NB STA 55+00 TO STA 70+00

FILE NAME: P:\CIVIL\I471\6-2021.00\CONTRACT PLANS AND PROPOSAL\CONTRACT PLAN SET\ROADWAY\R19800MT.DGN
USER: tvonbehren
DATE PLOTTED: January 2, 2012
E-SHEET NAME:
MicroStation v8.11.7.443

COUNTY OF	ITEM NO.	SHEET NO.
CAMPBELL	6-2021.00	R199

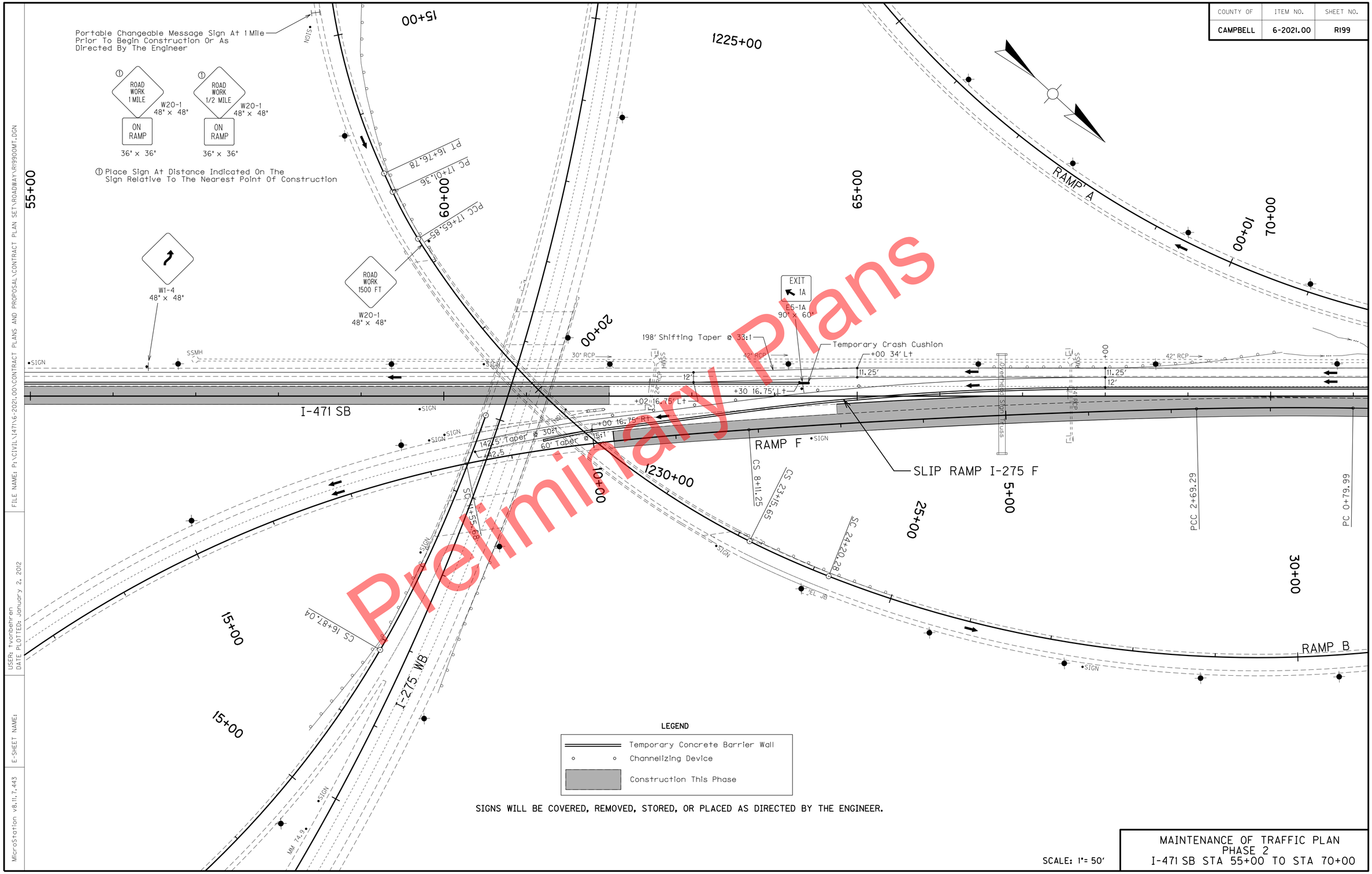

SIGNS WILL BE COVERED, REMOVED, STORED, OR PLACED AS DIRECTED BY THE ENGINEER.

SCALE: 1"= 50'

MAINTENANCE OF TRAFFIC PLAN
PHASE 2
I-471 SB STA 55+00 TO STA 70+00

Preliminary Plans

FILE NAME: P:\CIVIL\I471\6-2021.00\CONTRACT PLANS AND PROPOSAL\CONTRACT PLAN SET\ROADWAY\R199OMT.DGN
USER: tvonbehren
DATE PLOTTED: January 2, 2012
E-SHEET NAME:
MicroStation v8.11.7.443

COUNTY OF	ITEM NO.	SHEET NO.
CAMPBELL	6-2021.00	R200

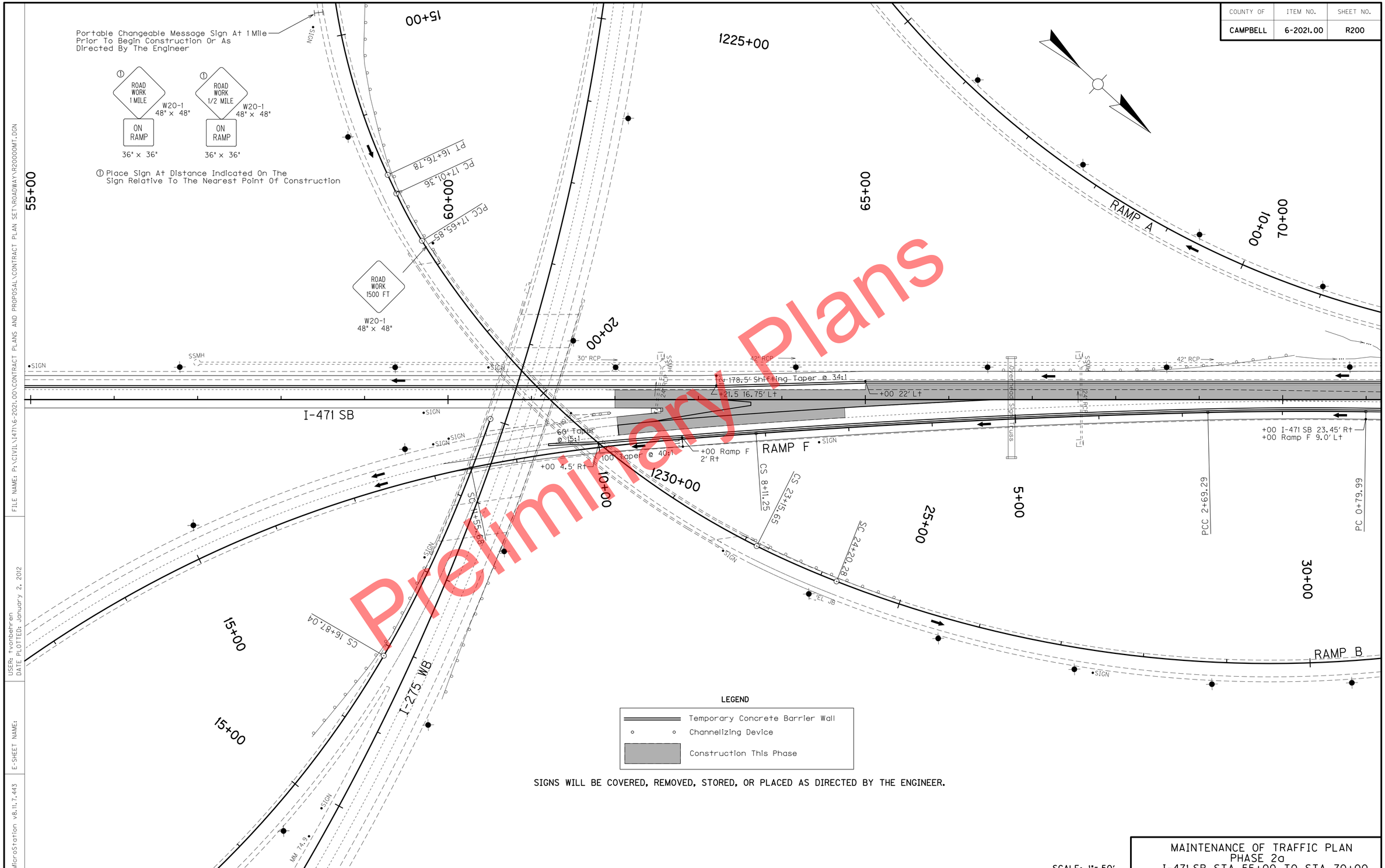

SIGNS WILL BE COVERED, REMOVED, STORED, OR PLACED AS DIRECTED BY THE ENGINEER.

Preliminary Plans

SCALE: 1"= 50'

MAINTENANCE OF TRAFFIC PLAN
PHASE 2a
I-471 SB STA 55+00 TO STA 70+00

FILE NAME: P:\CIVIL\I471\6-2021.00\CONTRACT PLANS AND PROPOSAL\CONTRACT PLAN SET\ROADWAY\R20000MT.DGN
USER: tvonbehren
DATE PLOTTED: January 2, 2012
E-SHEET NAME:
MicroStation v8.11.7.443

COUNTY OF	ITEM NO.	SHEET NO.
CAMPBELL	6-2021.00	R201

Preliminary Plans

RAMP A

RAMP B

SLIP RAMP I-275 B

I-471 SB

I-471 NB

75+00

80+00

30+00

35+00

PCC 2+69.29

PC 0+79.99

TS 4+66.52

CS 32+25.64

TS 79+16.56

SC 83+16.56

"EXIT ONLY" Pavement Marking

"EXIT ONLY" Pavement Marking

120' Taper @ 30:1

+05 16.75' Rt

60' Taper @ 15:1

210' Shifting Taper @ 35:1

+15 22.75' Rt

+25.6 4' Rt
Ramp B

+53.2 10.75' RT

+16.6 Begin Taper

Begin Conc. Barrier Wall
Crash Cushion
(Do Not Disturb)

42" RCP

15" CMP

W1-4
48" x 48"

W4-1
48" x 48"

TRUCKS
ENTERING
& EXITING
HIGHWAY
48" x 48"

Concrete Base

Ex Flume

11.25'

12'

NOTE:

Close Ramp B And Extend The Temporary Barrier Wall Through The Slip Ramp Area To Construct The Portion Of Roadway In That Area. See The Maintenance Of Traffic Notes For Ramp Closure Time. See The Maintenance Of Traffic Typical Sections For Location Of Temporary Barrier Wall.

LEGEND

- Temporary Concrete Barrier Wall
- Channelizing Device
- Construction This Phase

SIGNS WILL BE COVERED, REMOVED, STORED, OR PLACED AS DIRECTED BY THE ENGINEER.

SCALE: 1"= 50'

MAINTENANCE OF TRAFFIC PLAN
PHASE 2
I-471 NB STA 70+00 TO STA 85+00

FILE NAME: P:\CIVIL\147IN6-2021.00\CONTRACT PLANS AND PROPOSAL\CONTRACT PLAN SET\ROADWAY\R201OOMT.DGN
USER: tvonbehren
DATE PLOTTED: January 2, 2012
E-SHEET NAME:
MicroStation v8.11.7.443

COUNTY OF	ITEM NO.	SHEET NO.
CAMPBELL	6-2021.00	R202

Preliminary Plans

70+00
75+00
80+00
85+00
5+00
30+00
35+00
00+00
85+00

SC 7+66.52
TS 4+66.52
W1-4
48" x 48"
•POST
42" RCP
15" CMP
•SIGN
RAMP A
SAN
Ex Flume
"EXIT ONLY" Pavement Marking
PC 0+79.99
TS 79+16.95
SLIP RAMP I-275 B
CS 32+25.64
+25.6 4' Rt
Ramp B
120' Taper @ 30:1
RAMP B
T+05.6
+05 16.75' Rt
60' Taper @ 15:1
210' Shifting Taper @ 35:1
+15 22.75' Rt
W4-1
48" x 48"
Ex Flume
TRUCKS ENTERING & EXITING HIGHWAY
48" x 48"
+53.2 10.75' RT
11.25'
12'
I-471 SB
I-471 NB
+16.6 Begin Taper
780' Merging Taper @ 65:1
+13 15.9' Rt
Begin Conc. Barrier Wall
Crash Cushion (Do Not Disturb)
Conc. Barrier Wall
Concrete Base
SC 83+16.56
TS 81+80.36
WM
12"
4E
DEL JB
LEFT LANE EXIT ONLY
48" x 48"

LEGEND

- Temporary Concrete Barrier Wall
- Channelizing Device
- Construction This Phase

SIGNS WILL BE COVERED, REMOVED, STORED, OR PLACED AS DIRECTED BY THE ENGINEER.

SCALE: 1"= 50'

MAINTENANCE OF TRAFFIC PLAN
PHASE 2
I-471 SB STA 70+00 TO STA 85+00

FILE NAME: P:\CIVIL\471\6-2021.00\CONTRACT PLANS AND PROPOSAL\CONTRACT PLAN SET\ROADWAY\R2020MT.DGN
USER: tvonbehren
DATE PLOTTED: January 2, 2012
E-SHEET NAME:
MicroStation v8.11.7.443

COUNTY OF	ITEM NO.	SHEET NO.
CAMPBELL	6-2021.00	R203

Preliminary Plans

70+00
75+00
80+00
85+00
5+00
30+00
35+00
80+00
85+00

RAMP A
I-471 SB
SLIP RAMP I-275 B
RAMP B
I-471 NB

SC 7+66.52
TS 4+66.52
PC 0+79.99
CS 32+25.64
TS 7+91.56
SC 83+16.56
TS 81+80.36

W1-4
48" x 48"
W4-1
48" x 48"
TRUCKS ENTERING & EXITING HIGHWAY
48" x 48"
EXIT
1A
E5-1A
90" x 60"

"EXIT ONLY" Pavement Marking
Temporary Crash Cushion
Temporary Crash Cushion
Begin Conc Barrier Wall
Conc. Barrier Wall
Begin Conc. Barrier Wall
Crash Cushion
(Do Not Disturb)
Concrete Base
Ex Flume
42" RCP
15" CMP
30" CMP
SAN
WM
SIGN
POST

+00 27.75' Rt
+00 27.75' Rt
Begin Taper
+00 6.7' Rt
+20 16.1' Rt
+13 15.9' Rt
21.84' Lt I-471
@ Equation
+67.5 22' Lt
+50 10.75' Lt
+70 10.75' Lt
+50 6.75' Lt
+53.2 10.75' Rt
+16.6 Begin Taper
+15 22.75' Rt
+05 16.75' Rt
382.5' Shifting Taper @ 34:1
180' Taper @ 45:1
180' Taper @ 45:1
780' Merging Taper @ 65:1
60' Taper @ 15:1
210' Shifting Taper @ 35:1

LEGEND

- Temporary Concrete Barrier Wall
- Channelizing Device
- Construction This Phase

SIGNS WILL BE COVERED, REMOVED, STORED, OR PLACED AS DIRECTED BY THE ENGINEER.

SCALE: 1"= 50'

MAINTENANCE OF TRAFFIC PLAN
PHASE 2a
I-471 SB STA 70+00 TO STA 85+00

FILE NAME: P:\CIVIL\147N6-2021.00\CONTRACT PLANS AND PROPOSAL\CONTRACT PLAN SET\ROADWAY\R203GOMT.DGN
USER: tvonbehren
DATE PLOTTED: January 2, 2012
E-SHEET NAME:
MicroStation v8.11.7.443

COUNTY OF	ITEM NO.	SHEET NO.
CAMPBELL	6-2021.00	R204

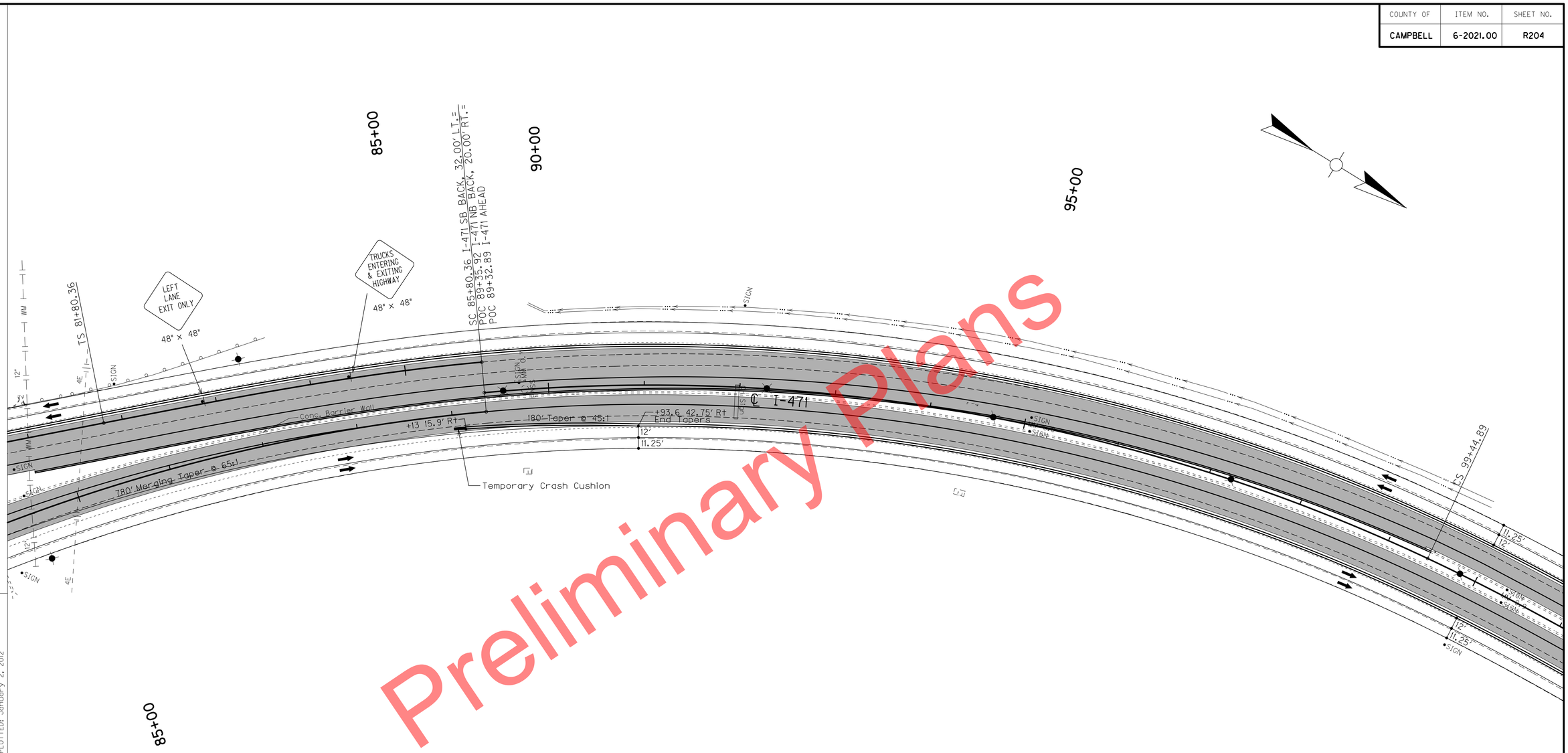

Preliminary Plans

LEGEND

- Temporary Concrete Barrier Wall
- Channelizing Device
- Construction This Phase

SIGNS WILL BE COVERED, REMOVED, STORED, OR PLACED AS DIRECTED BY THE ENGINEER.

SCALE: 1"= 50'

MAINTENANCE OF TRAFFIC PLAN - PHASE 2

I-471 NB STA 85+00 TO STA 89+35.95
I-471 SB STA 85+00 TO STA 85+80.36
I-471 STA 89+32.89 TO STA 100+00

FILE NAME: P:\CIVIL\471\6-2021.00\CONTRACT PLANS AND PROPOSAL\CONTRACT PLAN SET\ROADWAY\R204GOMT.DGN
USER: tvonbehren
DATE PLOTTED: January 2, 2012
E-SHEET NAME:
MicroStation v8.11.7.443

COUNTY OF	ITEM NO.	SHEET NO.
CAMPBELL	6-2021.00	R205

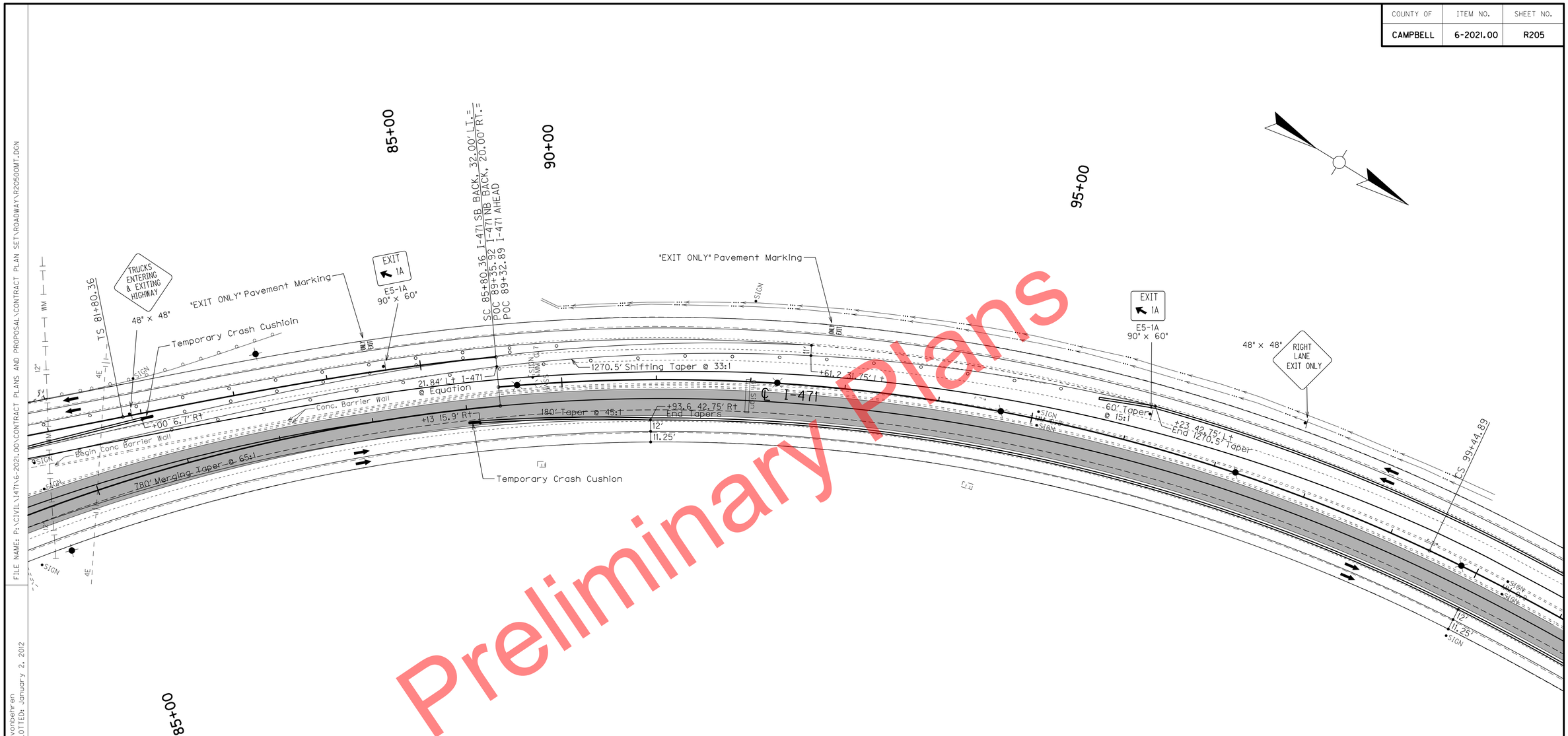

Preliminary Plans

LEGEND

- Temporary Concrete Barrier Wall
- Channelizing Device
- Construction This Phase

SIGNS WILL BE COVERED, REMOVED, STORED, OR PLACED AS DIRECTED BY THE ENGINEER.

SCALE: 1"= 50'

MAINTENANCE OF TRAFFIC PLAN - PHASE 2a

I-471 NB STA 85+00 TO STA 89+35.95
I-471 SB STA 85+00 TO STA 85+80.36
I-471 STA 89+32.89 TO STA 100+00

FILE NAME: P:\CIVIL\147\N6-2021.00\CONTRACT PLANS AND PROPOSAL\CONTRACT PLAN SET\ROADWAY\R205OMT.DGN
USER: tvonbehren
DATE PLOTTED: January 2, 2012
E-SHEET NAME:
MicroStation v8.11.7.443

COUNTY OF	ITEM NO.	SHEET NO.
CAMPBELL	6-2021.00	R206

FILE NAME: P:\CIVIL\147\6-2021.00\CONTRACT PLANS AND PROPOSAL\CONTRACT PLAN SET\ROADWAY\R206GOMT.DGN
USER: tvonbehren
DATE PLOTTED: January 2, 2012
E-SHEET NAME:
MicroStation v8.11.7.443

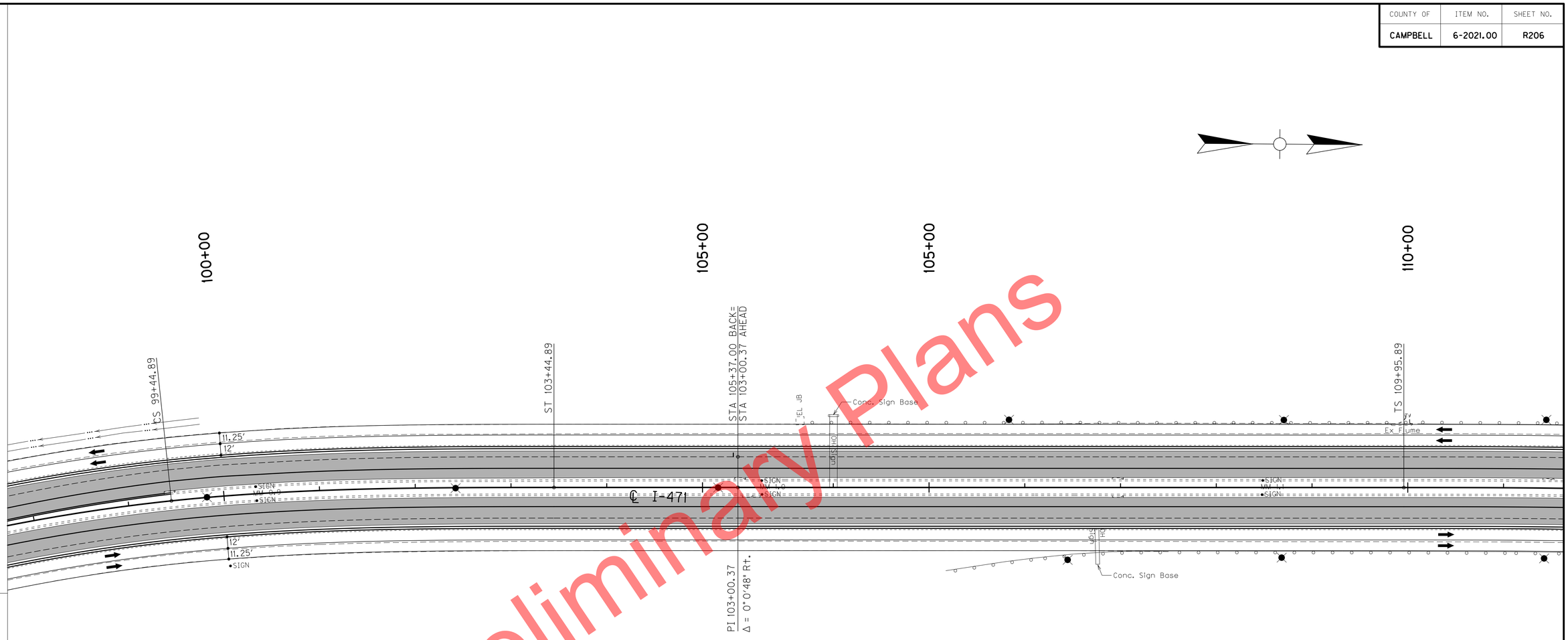

Preliminary Plans

LEGEND

- Temporary Concrete Barrier Wall
- Channelizing Device
- Construction This Phase

SIGNS WILL BE COVERED, REMOVED, STORED, OR PLACED AS DIRECTED BY THE ENGINEER.

SCALE: 1"= 50'

MAINTENANCE OF TRAFFIC PLAN
PHASE 2
I-471 STA 100+00 TO STA 110+00

COUNTY OF	ITEM NO.	SHEET NO.
CAMPBELL	6-2021.00	R207

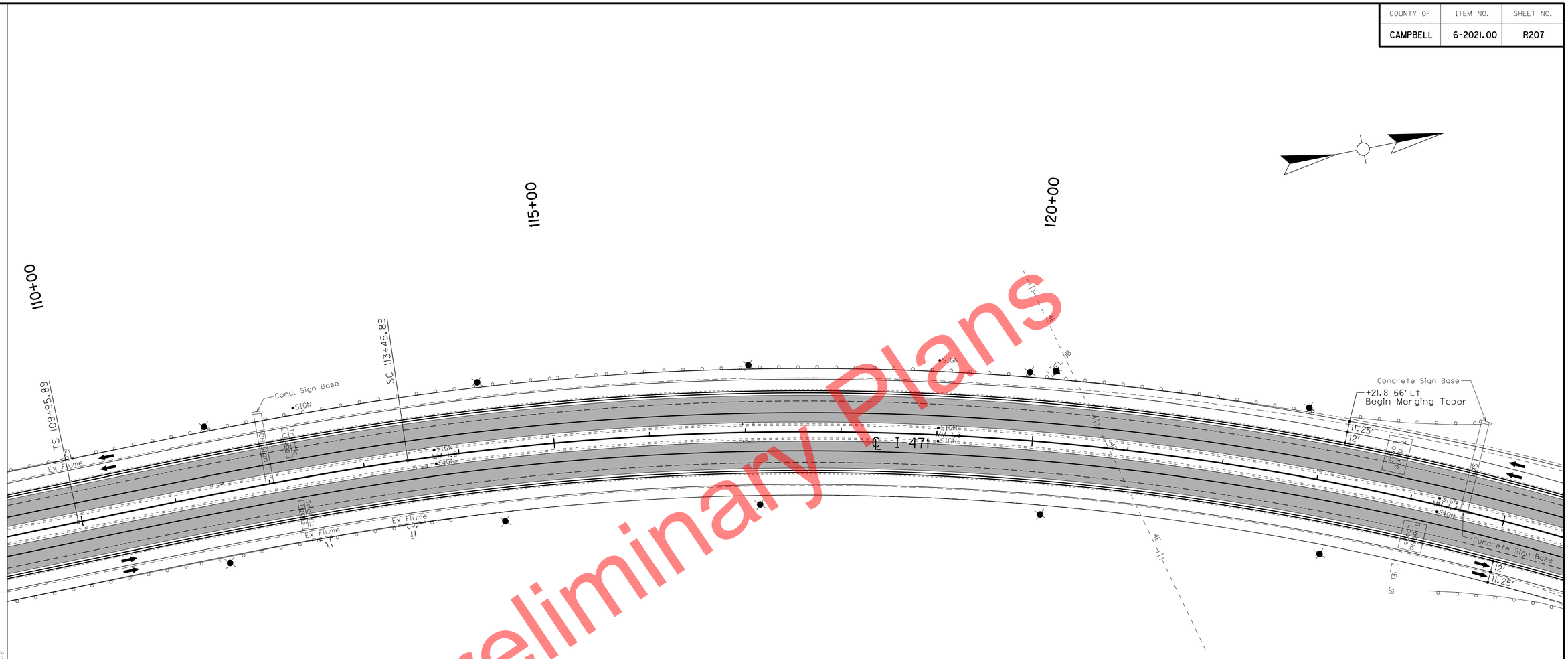

Preliminary

LEGEND

- Temporary Concrete Barrier Wall
- Channelizing Device
- Construction This Phase

SIGNS WILL BE COVERED, REMOVED, STORED, OR PLACED AS DIRECTED BY THE ENGINEER.

SCALE: 1"= 50'

MAINTENANCE OF TRAFFIC PLAN
PHASE 2
I-471 STA 110+00 TO STA 125+00

FILE NAME: P:\CIVIL\471\6-2021.00\CONTRACT PLANS AND PROPOSAL\CONTRACT PLAN SET\ROADWAY\R207GOMT.DGN
USER: tvonbehren
DATE PLOTTED: January 2, 2012
E-SHEET NAME:
MicroStation v8.11.7.443

COUNTY OF	ITEM NO.	SHEET NO.
CAMPBELL	6-2021.00	R208

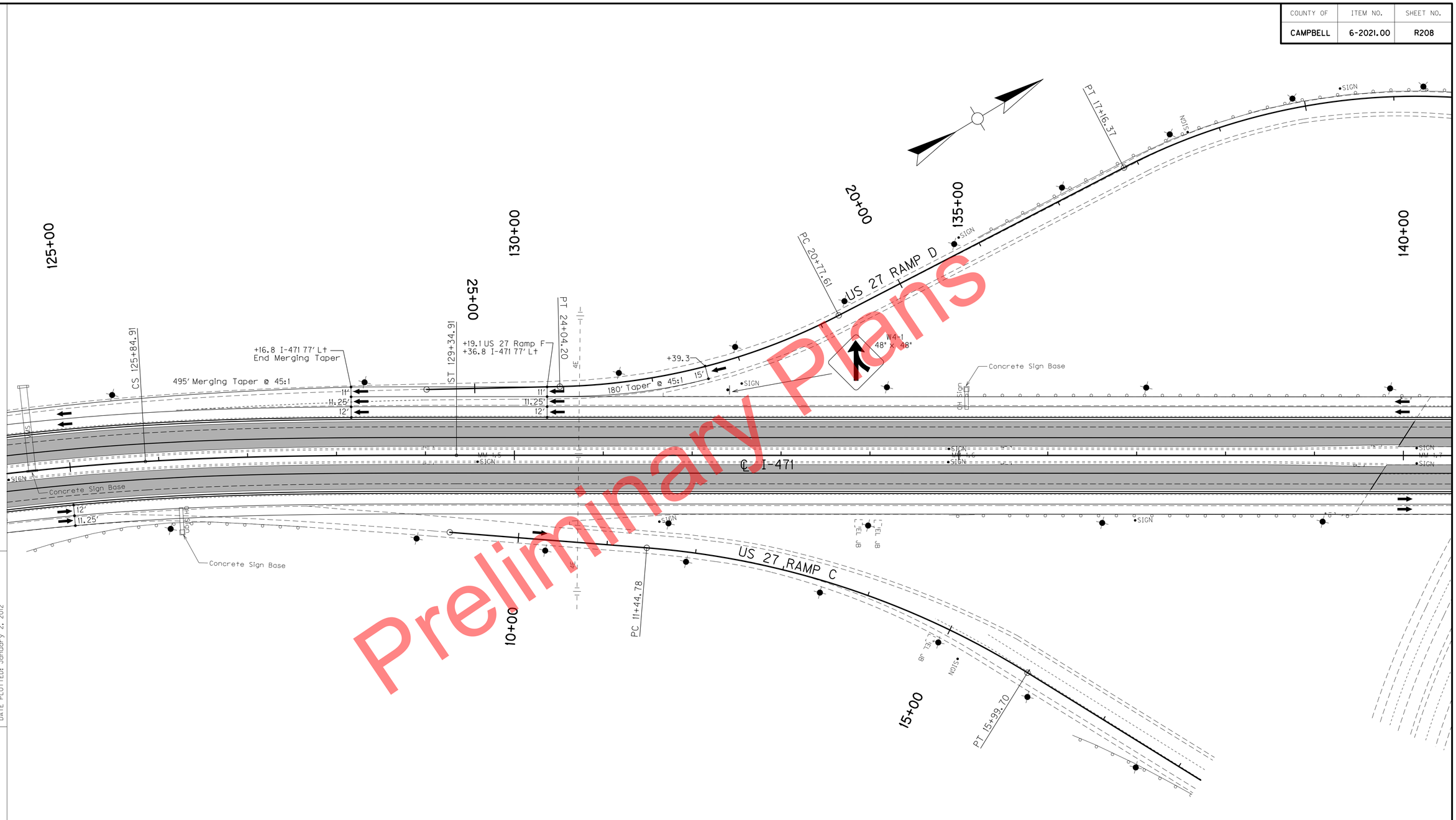

LEGEND

- Temporary Concrete Barrier Wall
- Channelizing Device
- Construction This Phase

SIGNS WILL BE COVERED, REMOVED, STORED, OR PLACED AS DIRECTED BY THE ENGINEER.

SCALE: 1"= 50'

MAINTENANCE OF TRAFFIC PLAN
PHASE 2
I-471 STA 125+00 TO STA 140+00

FILE NAME: P:\CIVIL\471\6-2021.00\CONTRACT PLANS AND PROPOSAL\CONTRACT PLAN SET\ROADWAY\R208GOMT.DGN
USER: tvonbehren
DATE PLOTTED: January 2, 2012
E-SHEET NAME:
MicroStation v8.11.7.443

COUNTY OF	ITEM NO.	SHEET NO.
CAMPBELL	6-2021.00	R209

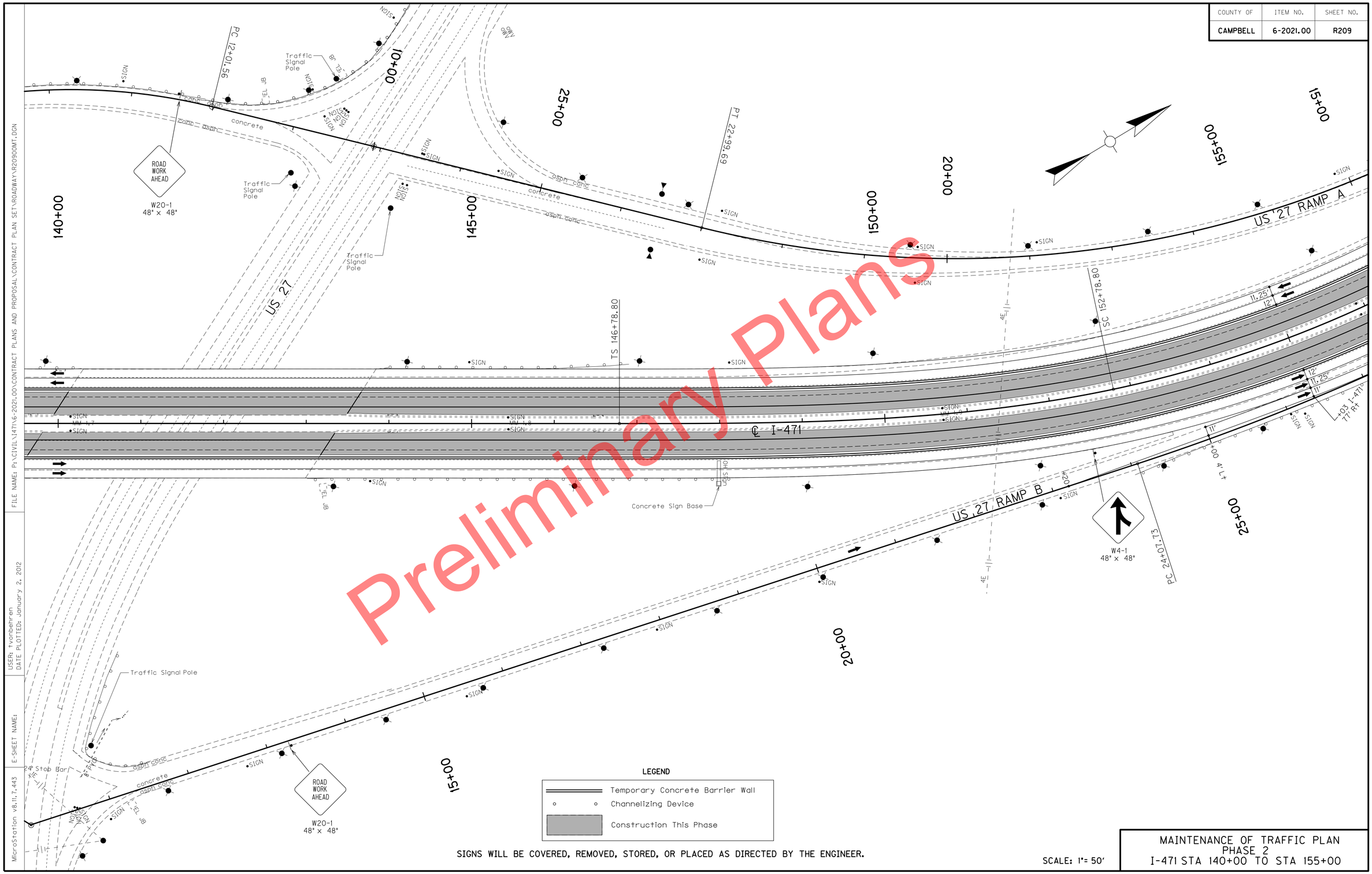

Preliminary Plans

SIGNS WILL BE COVERED, REMOVED, STORED, OR PLACED AS DIRECTED BY THE ENGINEER.

SCALE: 1"= 50'

MAINTENANCE OF TRAFFIC PLAN
PHASE 2
I-471 STA 140+00 TO STA 155+00

FILE NAME: P:\CIVIL\I471\6-2021.00\CONTRACT PLANS AND PROPOSAL\CONTRACT PLAN SET\ROADWAY\R20900MT.DGN
USER: tvonbehren
DATE PLOTTED: January 2, 2012
E-SHEET NAME:
MicroStation v8.11.7.443

COUNTY OF	ITEM NO.	SHEET NO.
CAMPBELL	6-2021.00	R210

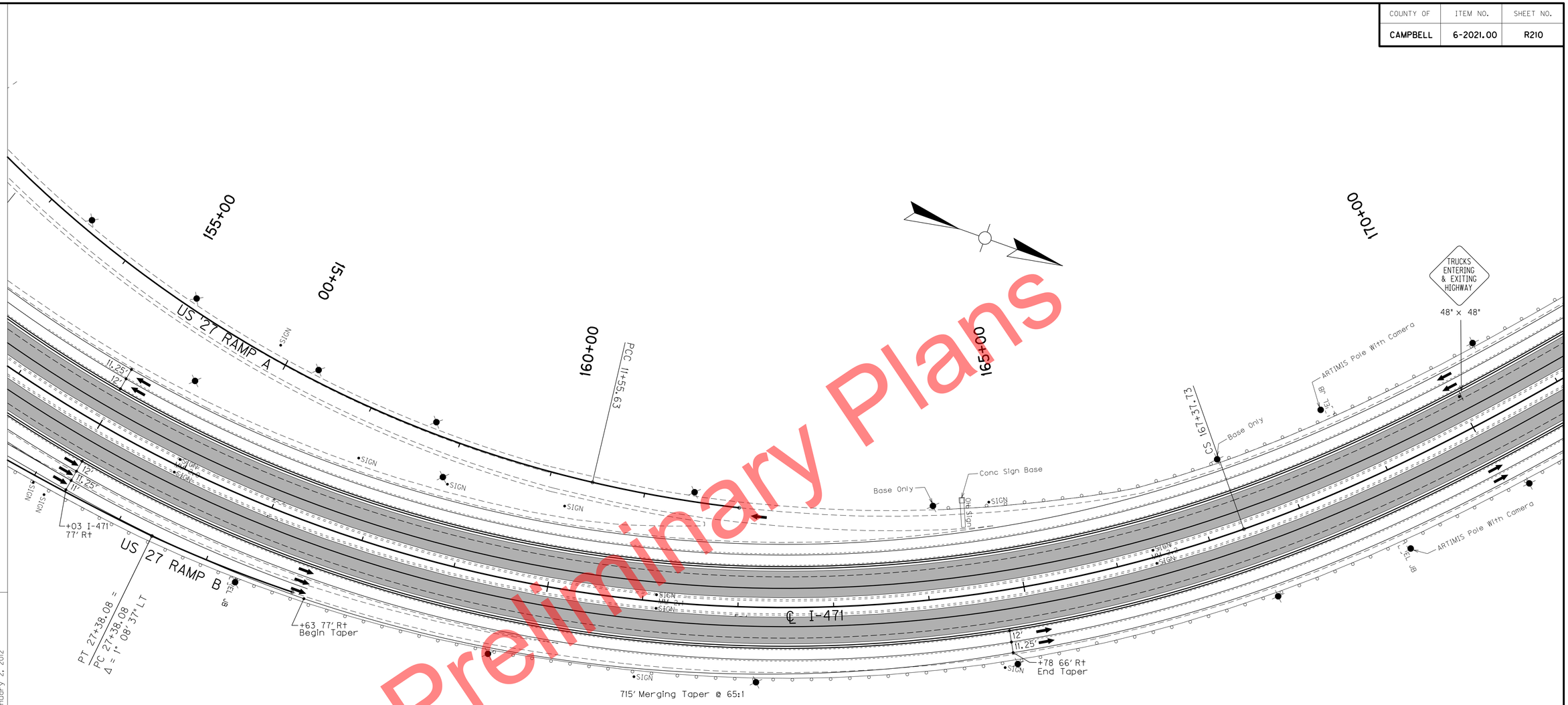

Preliminary Plans

LEGEND

- Temporary Concrete Barrier Wall
- Channelizing Device
- Construction This Phase

SIGNS WILL BE COVERED, REMOVED, STORED, OR PLACED AS DIRECTED BY THE ENGINEER.

SCALE: 1"= 50'

MAINTENANCE OF TRAFFIC PLAN
PHASE 2
I-471 STA 155+00 TO STA 170+00

MicroStation v8.11.7.443
E-SHEET NAME:
USER: tvonbehren
DATE PLOTTED: January 2, 2012
FILE NAME: P:\CIVIL\471\6-2021.00\CONTRACT PLANS AND PROPOSAL\CONTRACT PLAN SET\ROADWAY\R210OOMT.DGN

COUNTY OF	ITEM NO.	SHEET NO.
CAMPBELL	6-2021.00	R211

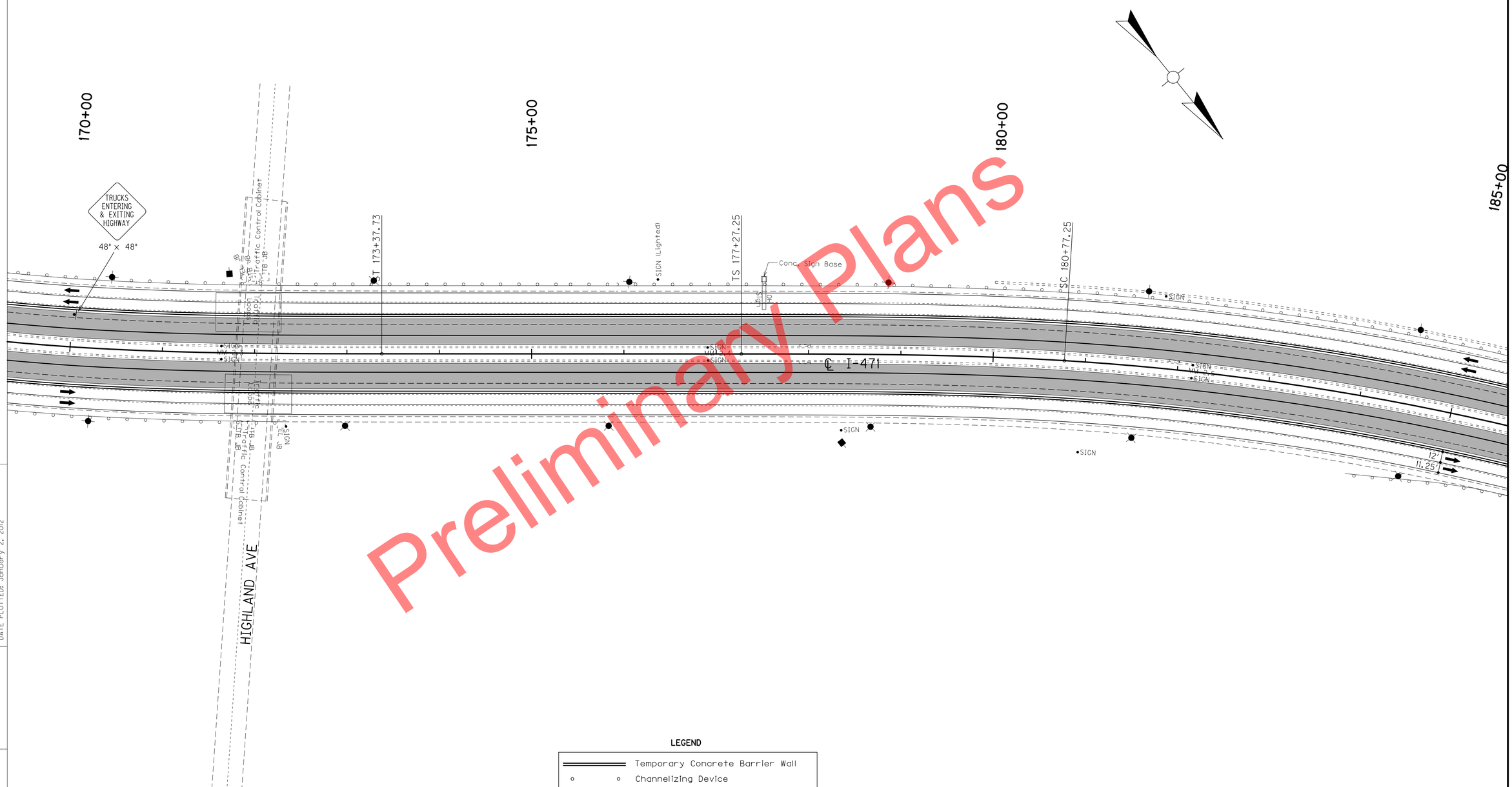

LEGEND

═══	Temporary Concrete Barrier Wall
○ ○	Channelizing Device
▒	Construction This Phase

SIGNS WILL BE COVERED, REMOVED, STORED, OR PLACED AS DIRECTED BY THE ENGINEER.

SCALE: 1"= 50'

MAINTENANCE OF TRAFFIC PLAN
PHASE 2
I-471 STA 170+00 TO STA 185+00

FILE NAME: P:\CIVIL\I471\6-2021.00\CONTRACT PLANS AND PROPOSAL\CONTRACT PLAN SET\ROADWAY\R211OOMT.DGN

USER: tvonbehren
DATE PLOTTED: January 2, 2012

E-SHEET NAME:

MicroStation v8.11.7.443

COUNTY OF	ITEM NO.	SHEET NO.
CAMPBELL	6-2021.00	R212

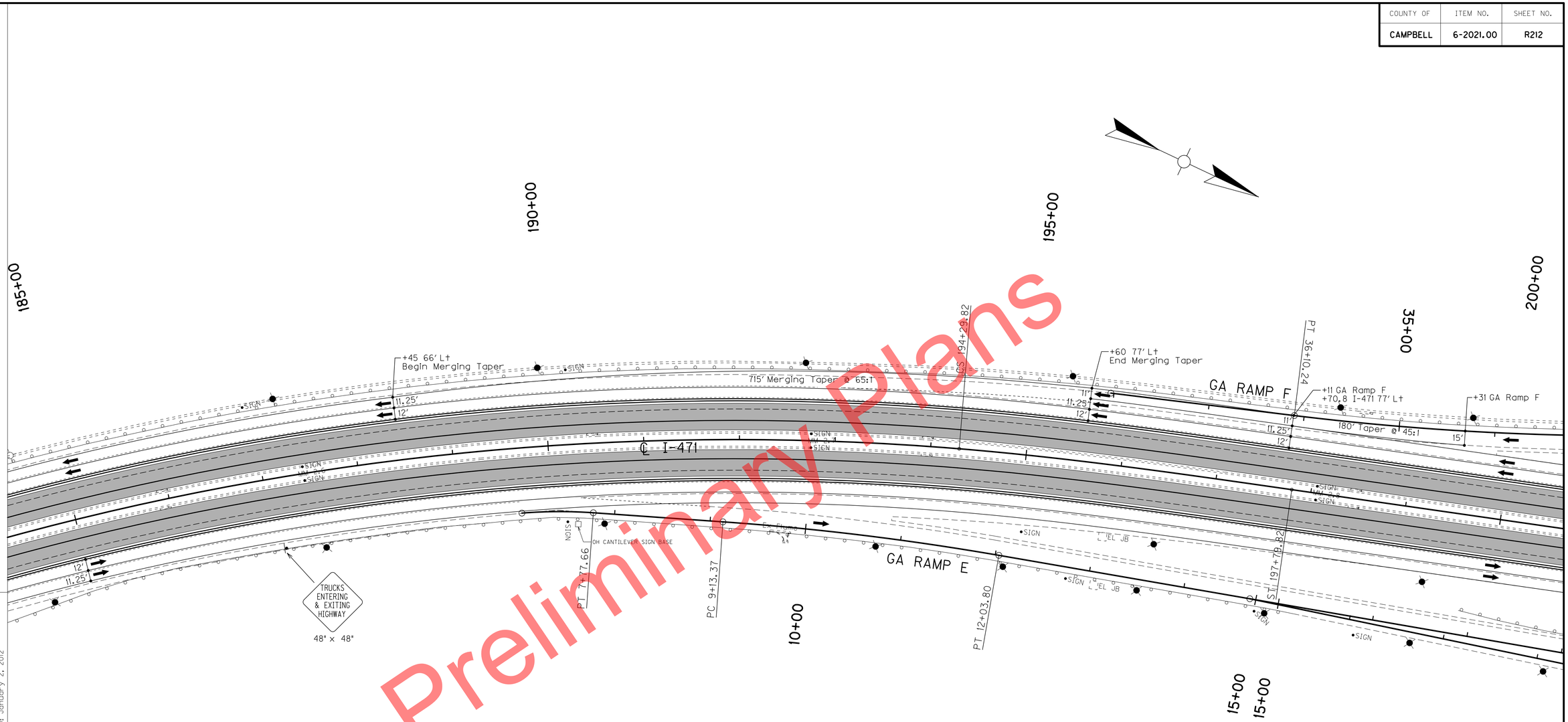
185+00
190+00
195+00
200+00
35+00
10+00
15+00
15+00
℄ I-471
+45 66' Lt
Begin Merging Taper
715' Merging Taper @ 65:1
+60 77' Lt
End Merging Taper
GA RAMP F
PT 36+10.24
+11 GA Ramp F
+70.8 I-471 77' Lt
180' Taper @ 45:1
+31 GA Ramp F
PT 34+29.82
GA RAMP E
PT 12+03.80
PC 9+13.37
PT 7+77.66
ST 197+78.22
OH CANTILEVER SIGN BASE
TRUCKS ENTERING & EXITING HIGHWAY
48" × 48"
11.25'
12'
15'
SIGN
SIGN
WW-2.3
SIGN
SIGN
SIGN

COUNTY OF	ITEM NO.	SHEET NO.
CAMPBELL	6-2021.00	R213

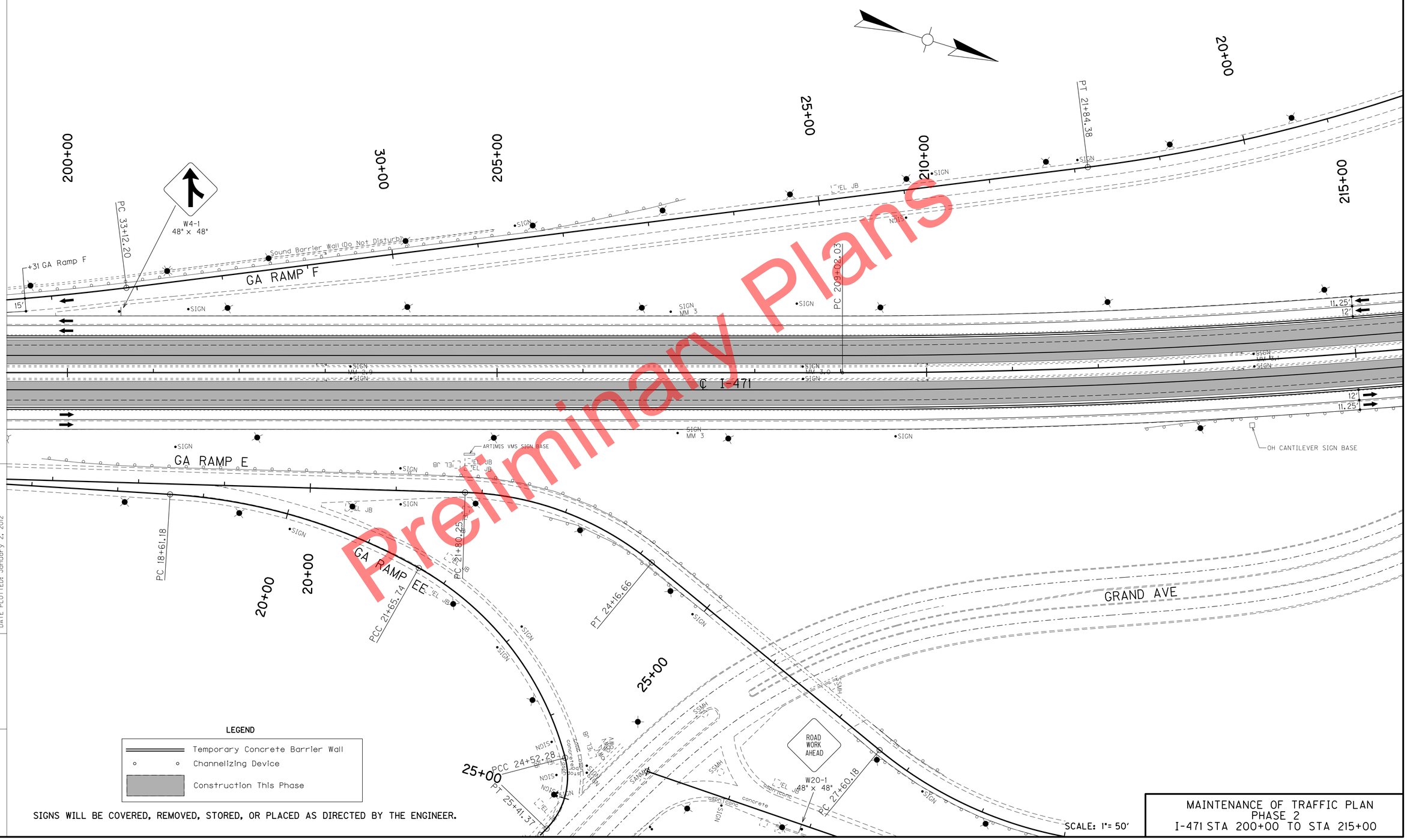

LEGEND

- Temporary Concrete Barrier Wall
- Channelizing Device
- Construction This Phase

SIGNS WILL BE COVERED, REMOVED, STORED, OR PLACED AS DIRECTED BY THE ENGINEER.

SCALE: 1"= 50'

MAINTENANCE OF TRAFFIC PLAN
PHASE 2
I-471 STA 200+00 TO STA 215+00

Preliminary Plans

FILE NAME: P:\CIVIL\I471\6-2021.00\CONTRACT PLANS AND PROPOSAL\CONTRACT PLAN SET\ROADWAY\R21300MT.DGN
USER: tvonbehren
DATE PLOTTED: January 2, 2012
E-SHEET NAME:
MicroStation v8.11.7.443

COUNTY OF	ITEM NO.	SHEET NO.
CAMPBELL	6-2021.00	R214

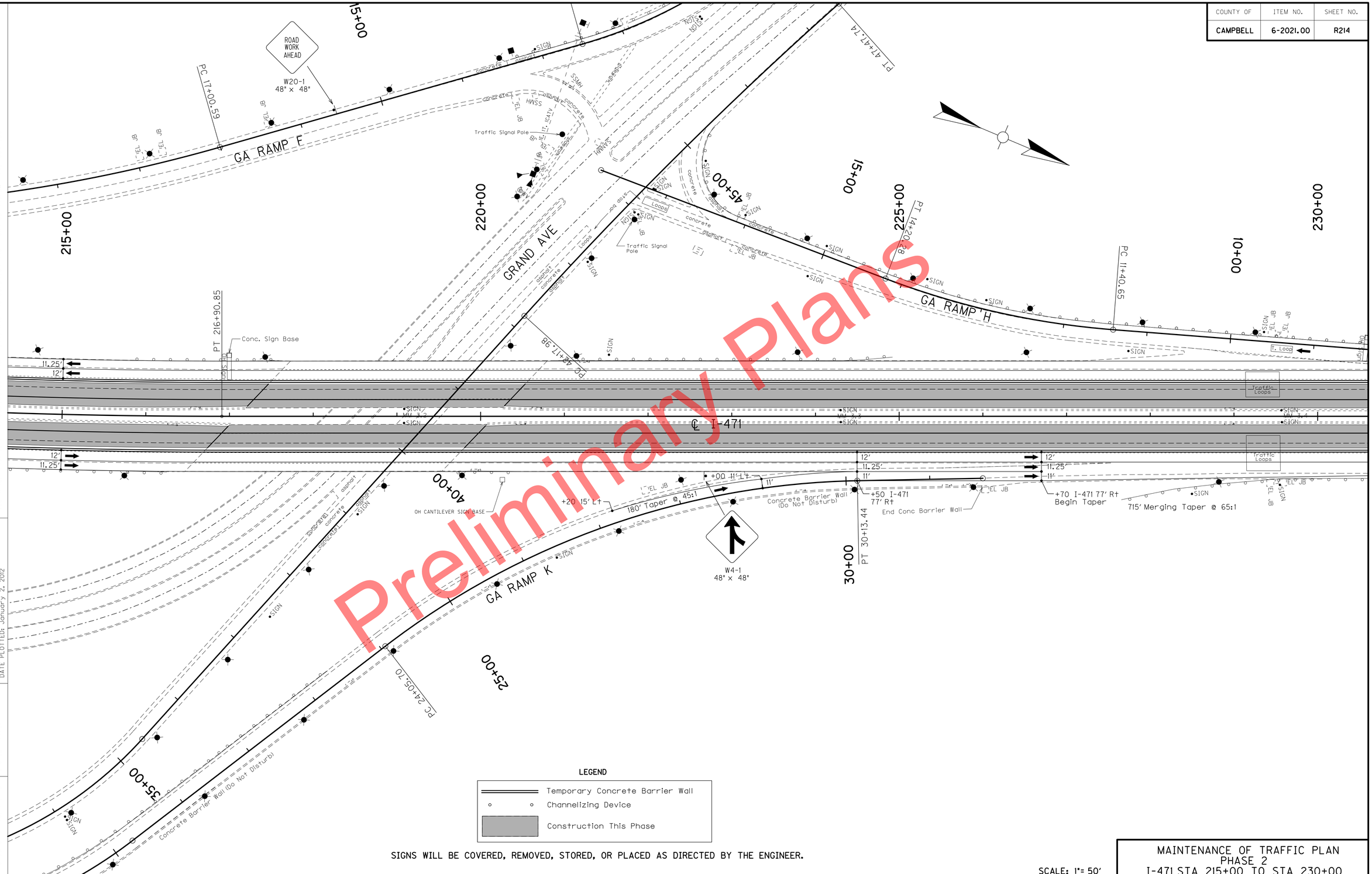

Preliminary Plans

LEGEND

- Temporary Concrete Barrier Wall
- Channelizing Device
- Construction This Phase

SIGNS WILL BE COVERED, REMOVED, STORED, OR PLACED AS DIRECTED BY THE ENGINEER.

SCALE: 1"= 50'

MAINTENANCE OF TRAFFIC PLAN
PHASE 2
I-471 STA 215+00 TO STA 230+00

FILE NAME: P:\CIVIL\I471\6-2021.00\CONTRACT PLANS AND PROPOSAL\CONTRACT PLAN SET\ROADWAY\R21400MT.DGN
USER: tvonbehren
DATE PLOTTED: January 2, 2012
E-SHEET NAME:
MicroStation v8.11.7.443

COUNTY OF	ITEM NO.	SHEET NO.
CAMPBELL	6-2021.00	R215

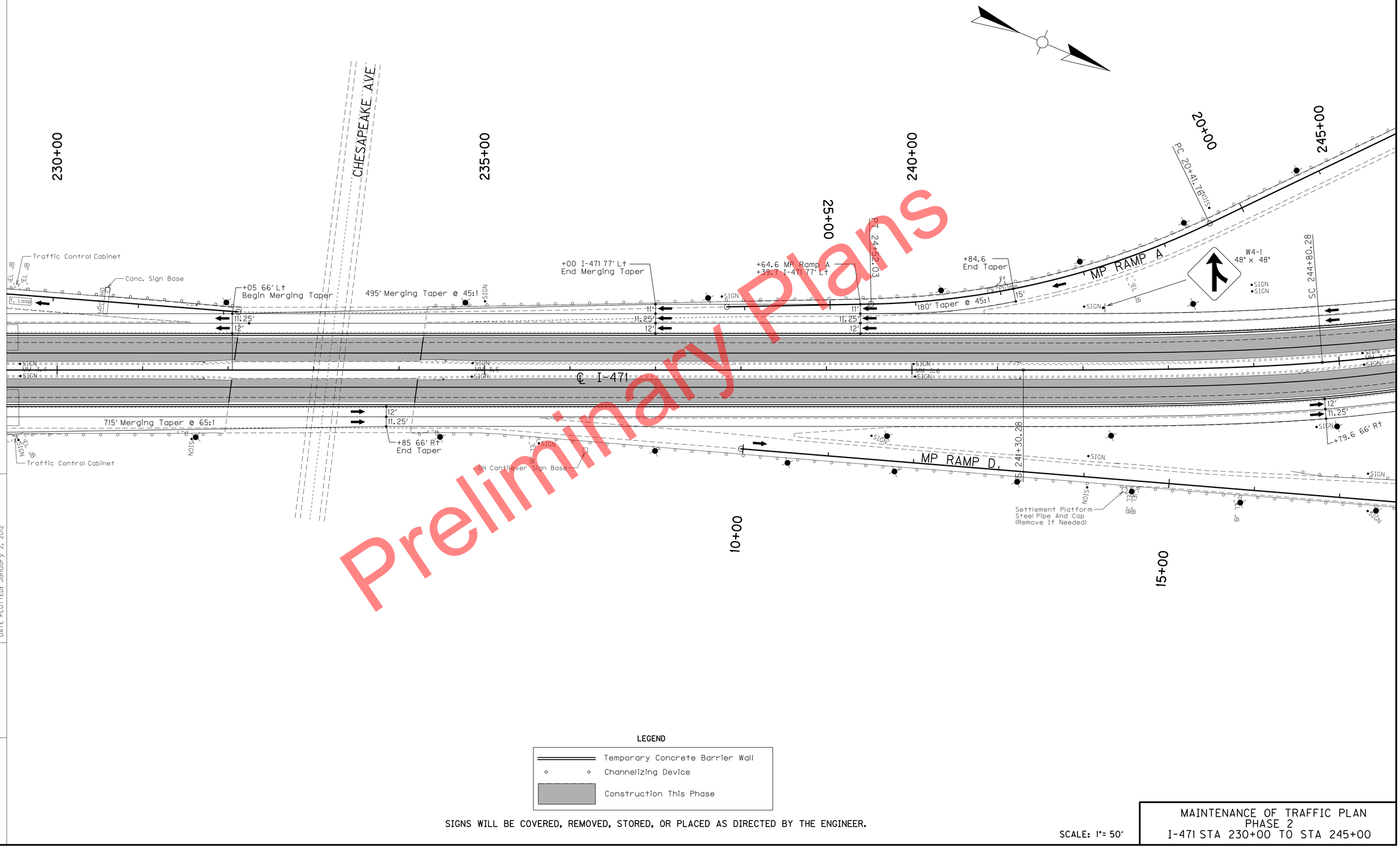

LEGEND

- Temporary Concrete Barrier Wall
- Channelizing Device
- Construction This Phase

SIGNS WILL BE COVERED, REMOVED, STORED, OR PLACED AS DIRECTED BY THE ENGINEER.

SCALE: 1"= 50'

MAINTENANCE OF TRAFFIC PLAN
PHASE 2
I-471 STA 230+00 TO STA 245+00

FILE NAME: P:\CIVIL\471\6-2021.00\CONTRACT PLANS AND PROPOSAL\CONTRACT PLAN SET\ROADWAY\R215OOMT.DGN
USER: tvanbehren
DATE PLOTTED: January 2, 2012
E-SHEET NAME:
MicroStation v8.11.7.443

COUNTY OF	ITEM NO.	SHEET NO.
CAMPBELL	6-2021.00	R216

Preliminary Plans

ROAD WORK AHEAD
W20-1
48" x 48"

MP RAMP A
MEMORIAL PARKWAY
MP RAMP N
MP RAMP M
℄ I-471
CSX RAILROAD

SC 244+80.28
CS 252+63.48
PC 13+08.09
PT 15+30.61
ST 256+13.48
PC 12+72.58
PT 15+87.36
PC 17+49.62
PT 19+62.53

Face Memorial Parkway Bridge Abutment
Concrete Slope Wall
Traffic Loops
Traffic Signal Pole
Face CSX RR Bridge Abutment
ARTIMIS Pole with Camera
Traffic Control Cabinet
First Column
End Split Wall - Begin Solid Wall
Last Column
Remove Island (Pave Flush)
+79.6 66' Rt
+64 56' Rt
+70 11' Lt
+90 15' Lt
+61 I-471 67' Rt
+81 I-471 67' Rt
Begin Merging Taper
180' Taper @ 45:1
W4-1
48" x 48"

10+00
15+00
20+00
245+00
250+00
255+00
260+00

LEGEND

- Temporary Concrete Barrier Wall
- Channelizing Device
- Construction This Phase

SIGNS WILL BE COVERED, REMOVED, STORED, OR PLACED AS DIRECTED BY THE ENGINEER.

SCALE: 1"= 50'

MAINTENANCE OF TRAFFIC PLAN
PHASE 2
I-471 STA 245+00 TO STA 260+00

FILE NAME: P:\CIVIL\147\N6-2021.00\CONTRACT PLANS AND PROPOSAL\CONTRACT PLAN SET\ROADWAY\R216OMT.DGN
USER: tvonbehren
DATE PLOTTED: January 2, 2012
E-SHEET NAME:
MicroStation v8.11.7.443

COUNTY OF	ITEM NO.	SHEET NO.
CAMPBELL	6-2021.00	R217

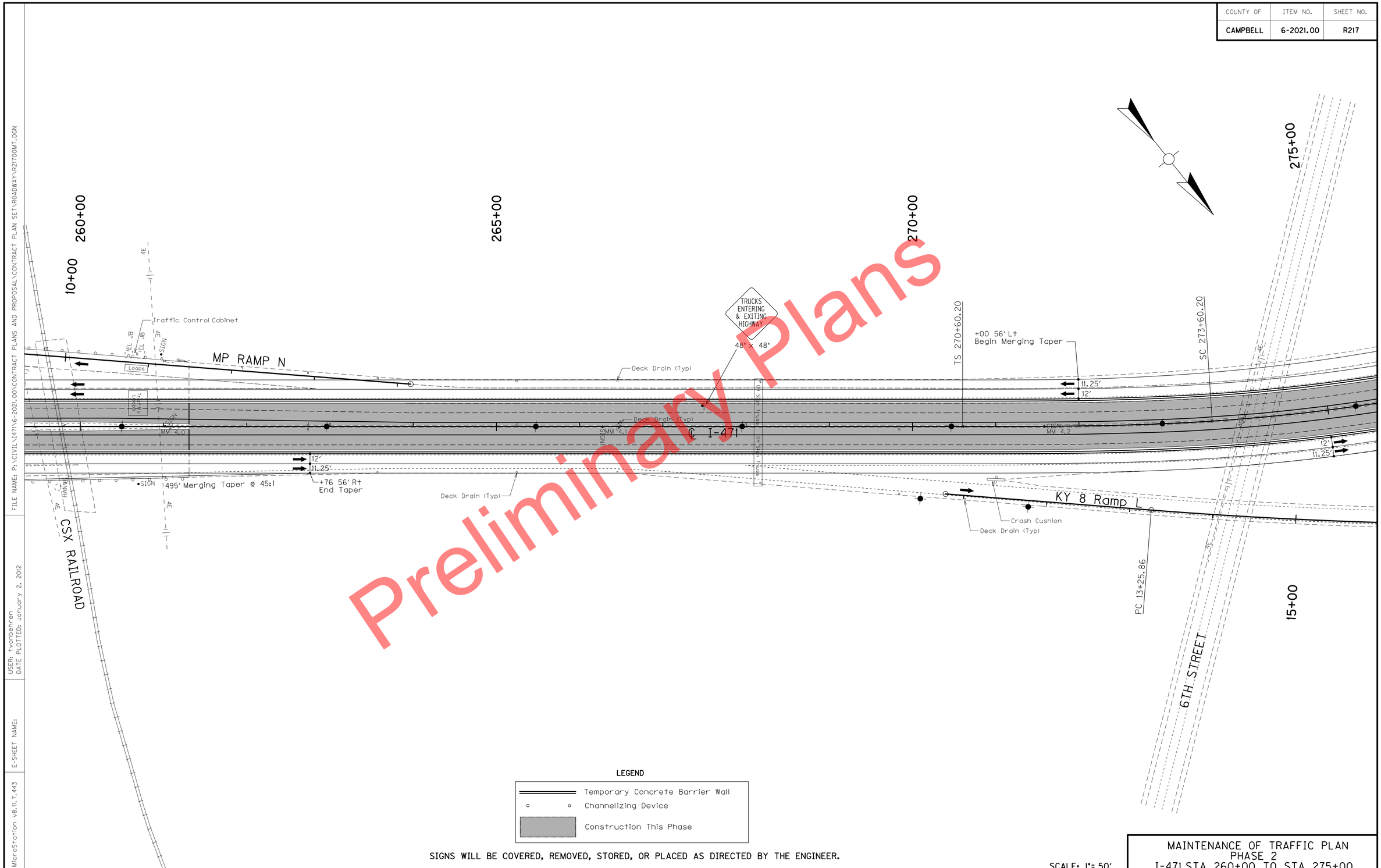

LEGEND

═══	Temporary Concrete Barrier Wall
○ ○	Channelizing Device
▒	Construction This Phase

SIGNS WILL BE COVERED, REMOVED, STORED, OR PLACED AS DIRECTED BY THE ENGINEER.

SCALE: 1"= 50'

MAINTENANCE OF TRAFFIC PLAN
PHASE 2
I-471 STA 260+00 TO STA 275+00

FILE NAME: P:\CIVIL\I471\6-2021.00\CONTRACT PLANS AND PROPOSAL\CONTRACT PLAN SET\ROADWAY\R217OOMT.DGN

USER: tvonbehren
DATE PLOTTED: January 2, 2012

E-SHEET NAME:

MicroStation v8.11.7.443

COUNTY OF	ITEM NO.	SHEET NO.
CAMPBELL	6-2021.00	R218

LEGEND

- Temporary Concrete Barrier Wall
- Channelizing Device
- Construction This Phase

SIGNS WILL BE COVERED, REMOVED, STORED, OR PLACED AS DIRECTED BY THE ENGINEER.

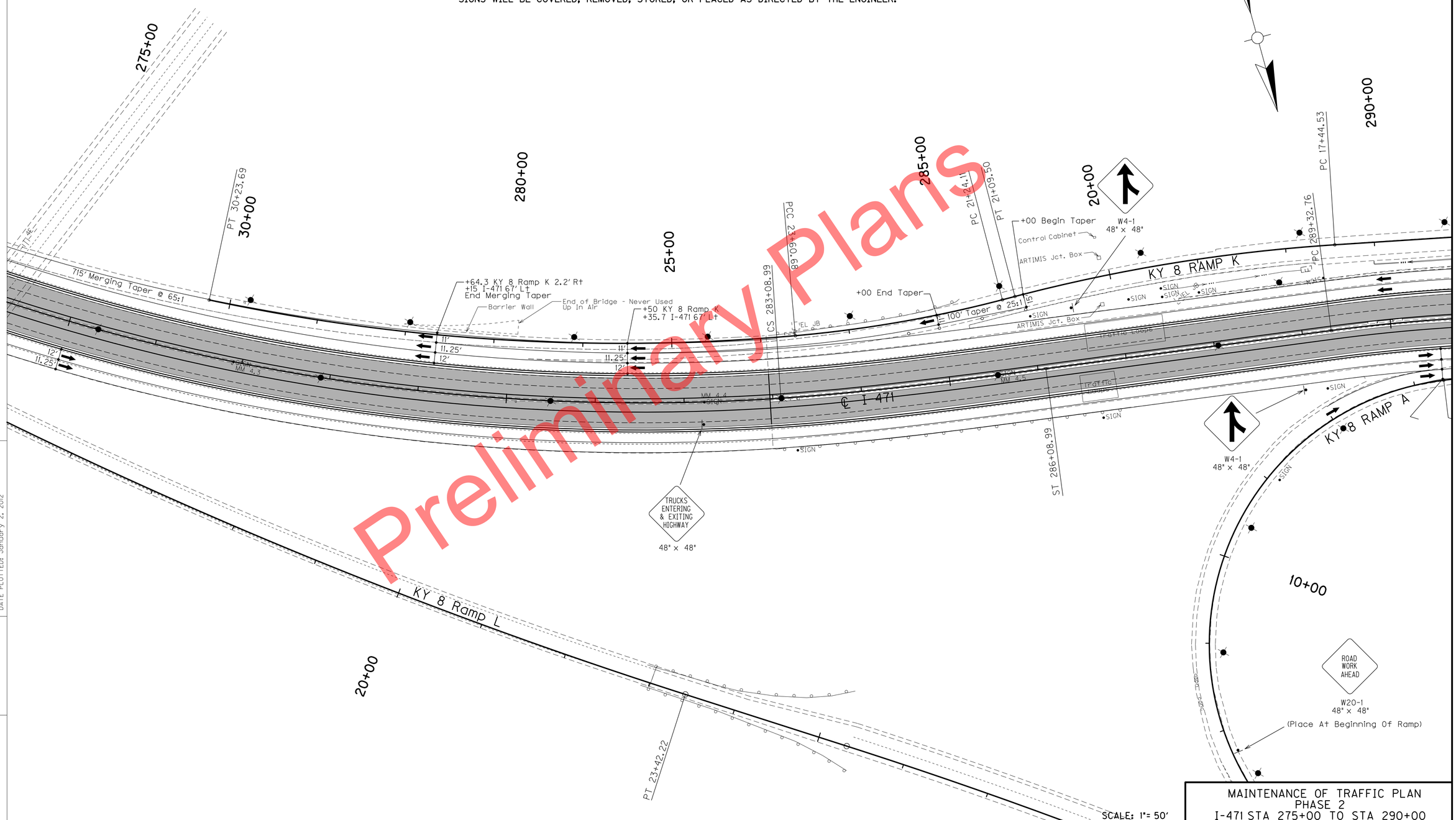

Preliminary Plans

SCALE: 1"= 50'

MAINTENANCE OF TRAFFIC PLAN
PHASE 2
I-471 STA 275+00 TO STA 290+00

FILE NAME: P:\CIVIL\I471\6-2021.00\CONTRACT PLANS AND PROPOSAL\CONTRACT PLAN SET\ROADWAY\R21800MT.DGN
USER: tvonbehren
DATE PLOTTED: January 2, 2012
E-SHEET NAME:
MicroStation v8.11.7.443

COUNTY OF	ITEM NO.	SHEET NO.
CAMPBELL	6-2021.00	R219

Preliminary Plans

PT 11+04.99
10+00
KY 8 RAMP B
ROAD WORK AHEAD
W20-1
48" x 48"
PC 6+48.56
PT 11+46.35
295+00
PC 10+10.49
10+00
5+00
PI 4+81.72
297+61.80
300+00
305+00
OHIO RIVER
Traffic Control Cabinet
Traffic Jct. Box
Crash Cushion
Traff Loops
15+00
KY 8 RAMP K
Conc Barrier Wall
+04.4 41.2' Lt
+04.4 39' Lt
Begin Bridge
℄ I-471
End Solid Conc Barrier Wall
MM 4.6
+92.2 39' Rt
+92.2 65.2' Rt
@ Bridge Barrier
+35 61' Rt
End Merging Taper
11.5'
7.7'
2.6'
+12 I-471 70' Rt
@ Guardrail
605' Merging Taper @ 55:1
Traffic Control Box
+30 I-471 68.25' Rt
Begin Merging Taper
PT 14+68.53
15+00
LP Base Only
PCC 13+33.29
+54 I-471 67' Rt
KY 8 RAMP A
ROAD WORK AHEAD
W20-1
48" x 48"
(Place At Beginning Of Ramp)
℄ KY 8
W1-4B
48" x 48"

LEGEND

- Temporary Concrete Barrier Wall
- Channelizing Device
- Construction This Phase

SIGNS WILL BE COVERED, REMOVED, STORED, OR PLACED AS DIRECTED BY THE ENGINEER.

SCALE: 1"= 50'

MAINTENANCE OF TRAFFIC PLAN
PHASE 2
I-471 STA 290+00 TO STA 305+00

FILE NAME: P:\CIVIL\471\6-2021.00\CONTRACT PLANS AND PROPOSAL\CONTRACT PLAN SET\ROADWAY\R219OOMT.DGN
USER: tvonbehren
DATE PLOTTED: January 2, 2012
E-SHEET NAME:
MicroStation v8.11.7.443

COUNTY OF	ITEM NO.	SHEET NO.
CAMPBELL	6-2021.00	R220

REMOVAL OF PAVEMENT MARKINGS AND RAISED PAVEMENT MARKERS

The Method Of Line Removal In Ohio Should Comply With ODOT Specification 614.11 Work Zone Pavement Markings Section G Conflicting Markings.

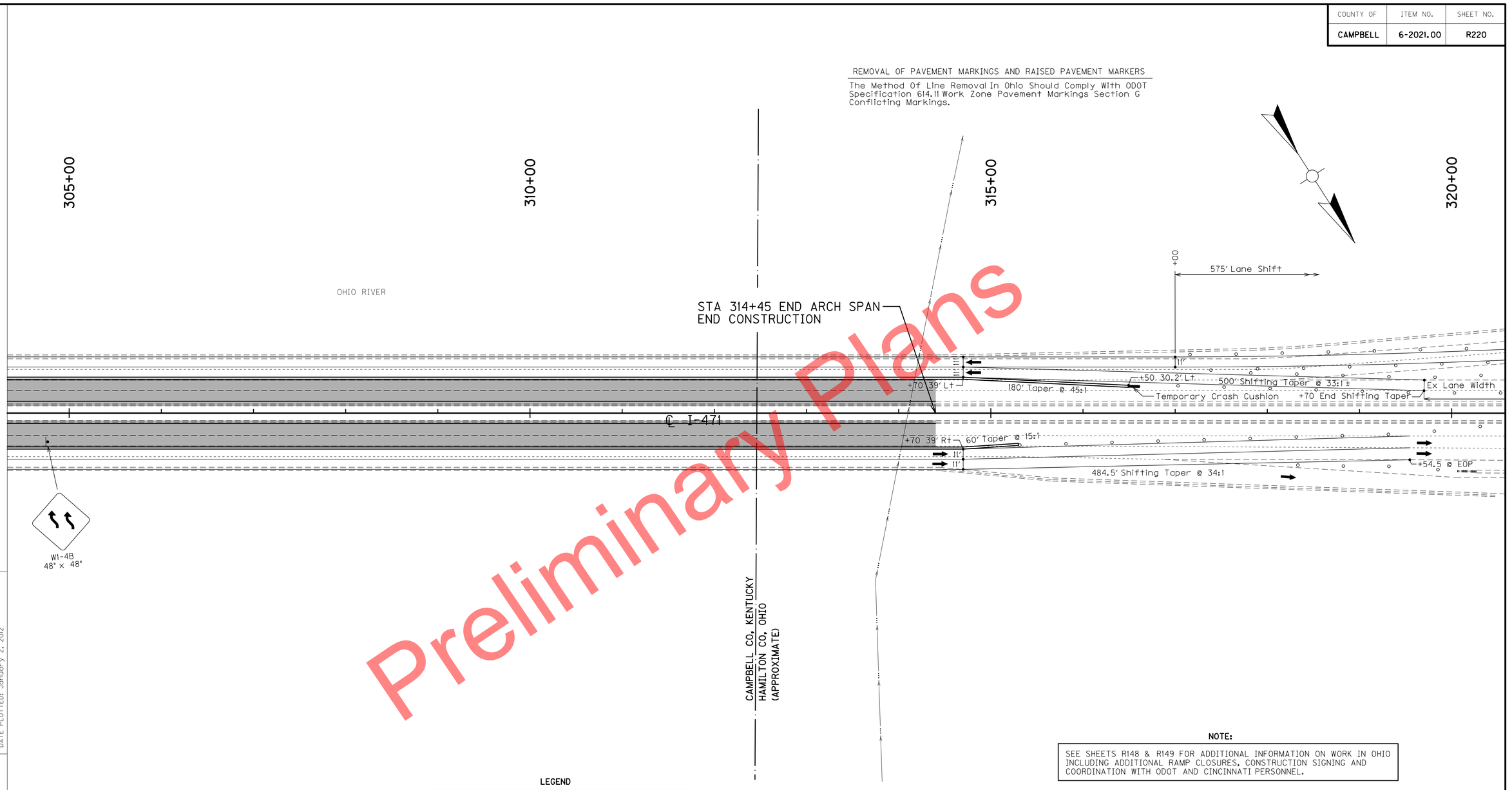

Preliminary Plans

LEGEND

- Temporary Concrete Barrier Wall
- Channelizing Device
- Construction This Phase

SIGNS WILL BE COVERED, REMOVED, STORED, OR PLACED AS DIRECTED BY THE ENGINEER.

NOTE:

SEE SHEETS R148 & R149 FOR ADDITIONAL INFORMATION ON WORK IN OHIO INCLUDING ADDITIONAL RAMP CLOSURES, CONSTRUCTION SIGNING AND COORDINATION WITH ODOT AND CINCINNATI PERSONNEL.

SCALE: 1"= 50'

MAINTENANCE OF TRAFFIC PLAN
PHASE 2
I-471 STA 305+00 TO OHIO SIGNING

FILE NAME: P:\CIVIL\147\N6-2021.00\CONTRACT PLANS AND PROPOSAL\CONTRACT PLAN SET\ROADWAY\R220OMT.DGN
USER: tvonbehren
DATE PLOTTED: January 2, 2012
E-SHEET NAME:
MicroStation v8.11.7.443

COUNTY OF	ITEM NO.	SHEET NO.
CAMPBELL	6-2021.00	R221

NOTE:

SEE SHEETS R148 & R149 FOR ADDITIONAL INFORMATION ON WORK IN OHIO INCLUDING ADDITIONAL RAMP CLOSURES, CONSTRUCTION SIGNING AND COORDINATION WITH ODOT AND CINCINNATI PERSONNEL.

LEGEND

- Temporary Concrete Barrier Wall
- Channelizing Device
- Construction This Phase

SIGNS WILL BE COVERED, REMOVED, STORED, OR PLACED AS DIRECTED BY THE ENGINEER.

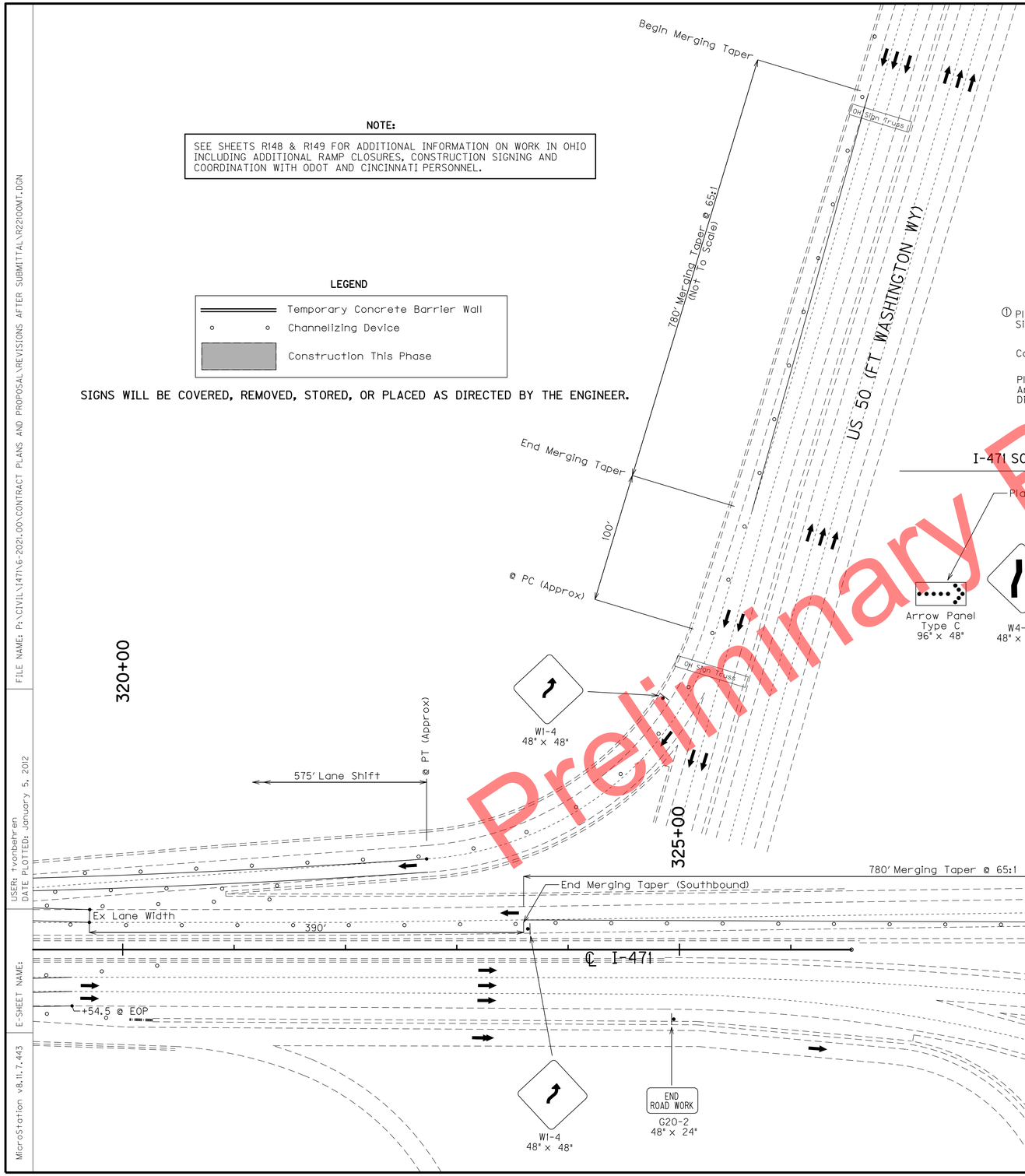

US 50 EASTBOUND LANE CLOSURE SIGNING

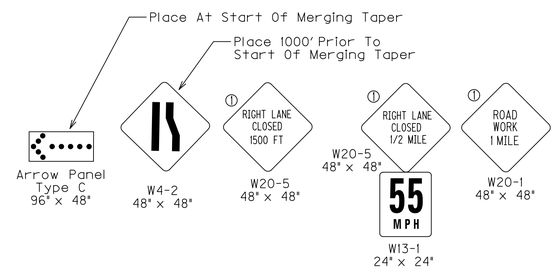

① Place Sign At Distance Indicated On The Sign Relative To The Nearest Point Of Construction

Construct Lane Drops Per The Standard Drawings And The M.U.T.C.D.

Place Portable Changeable Message Sign On US 50 And I-471 SB At 1 Mile Prior To Begin Construction Or As Directed By The Engineer.

I-471 SOUTHBOUND LANE CLOSURE SIGNING

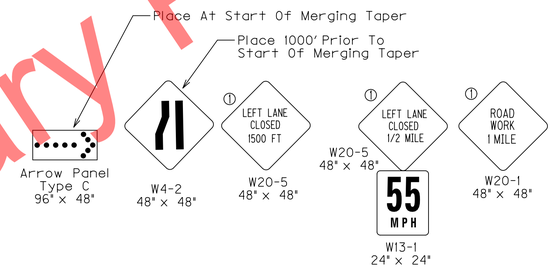

REMOVAL OF PAVEMENT MARKINGS AND RAISED PAVEMENT MARKERS

The Method Of Line Removal In Ohio Should Comply With ODOT Specification 614.11 Work Zone Pavement Markings Section G Conflicting Markings.

CONTINUOUS PROJECT SIGNING THIS PHASE ②

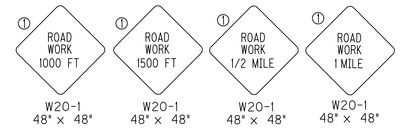

② These Signs Are To Be Installed On I-471 SB And US 50 EB Prior To Beginning Phase 2 Construction And Are To Remain In Place Throughout The Phase. Signs Are Not To Conflict With Lane Closure Signing When Lane Closures Are In Place.

Preliminary Plans

MAINTENANCE OF TRAFFIC PLAN
PHASE 2
I-471 OHIO SIGNING

SCALE: 1"= 50'

FILE NAME: P:\CIVIL\147N6-2021.00\CONTRACT PLANS AND PROPOSAL\REVISIONS AFTER SUBMITTAL\R221OMT.DGN
USER: tvonbehren
DATE PLOTTED: January 5, 2012
E-SHEET NAME:
MicroStation v8.11.7.443

COUNTY OF	ITEM NO.	SHEET NO.
CAMPBELL	6-2021.00	R222

LEGEND

- Temporary Concrete Barrier Wall
- Channelizing Device
- Construction This Phase

SIGNS WILL BE COVERED, REMOVED, STORED, OR PLACED AS DIRECTED BY THE ENGINEER.

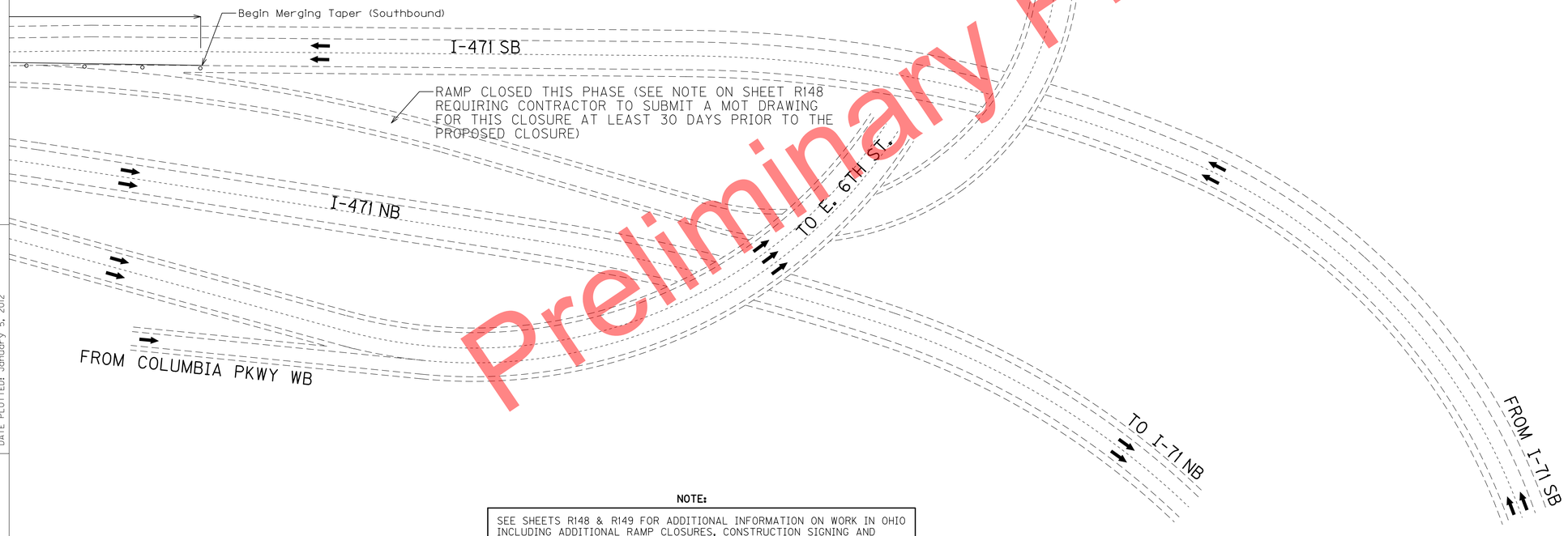

Preliminary Plans

NOTE:

SEE SHEETS R148 & R149 FOR ADDITIONAL INFORMATION ON WORK IN OHIO INCLUDING ADDITIONAL RAMP CLOSURES, CONSTRUCTION SIGNING AND COORDINATION WITH ODOT AND CINCINNATI PERSONNEL.

SCALE: 1"= 50'

MAINTENANCE OF TRAFFIC PLAN
PHASE 2
I-471 OHIO SIGNING

FILE NAME: P:\CIVIL\471\N6-2021.00\CONTRACT PLANS AND PROPOSAL\REVISIONS AFTER SUBMITTAL\R22200MT.DGN
USER: jnapier
DATE PLOTTED: January 5, 2012
E-SHEET NAME:
MicroStation v8.11.7.443

COUNTY OF	ITEM NO.	SHEET NO.
CAMPBELL	6-2021.00	R223

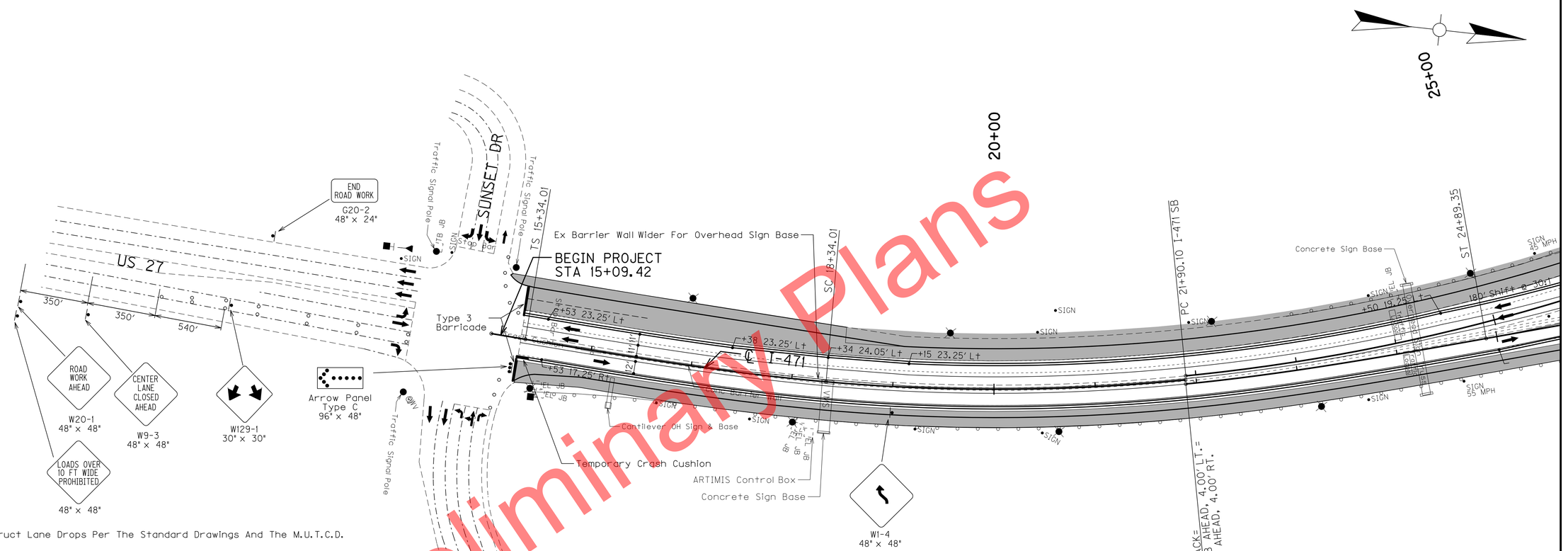

Preliminary Plans

LEGEND

- Temporary Concrete Barrier Wall
- Channelizing Device
- Construction This Phase

SIGNS WILL BE COVERED, REMOVED, STORED, OR PLACED AS DIRECTED BY THE ENGINEER.

SCALE: 1"= 50'

MAINTENANCE OF TRAFFIC PLAN PHASE 3
I-471 STA 15+30 TO STA 21+89.35
I-471 NB&SB STA 21+89.35 TO STA 25+00

FILE NAME: P:\CIVIL\147\N6-2021.00\CONTRACT PLANS AND PROPOSAL\CONTRACT PLAN SET\ROADWAY\R223OMT.DGN
USER: tvonbehren
DATE PLOTTED: January 2, 2012
E-SHEET NAME:
MicroStation v8.11.7.443

COUNTY OF	ITEM NO.	SHEET NO.
CAMPBELL	6-2021.00	R224

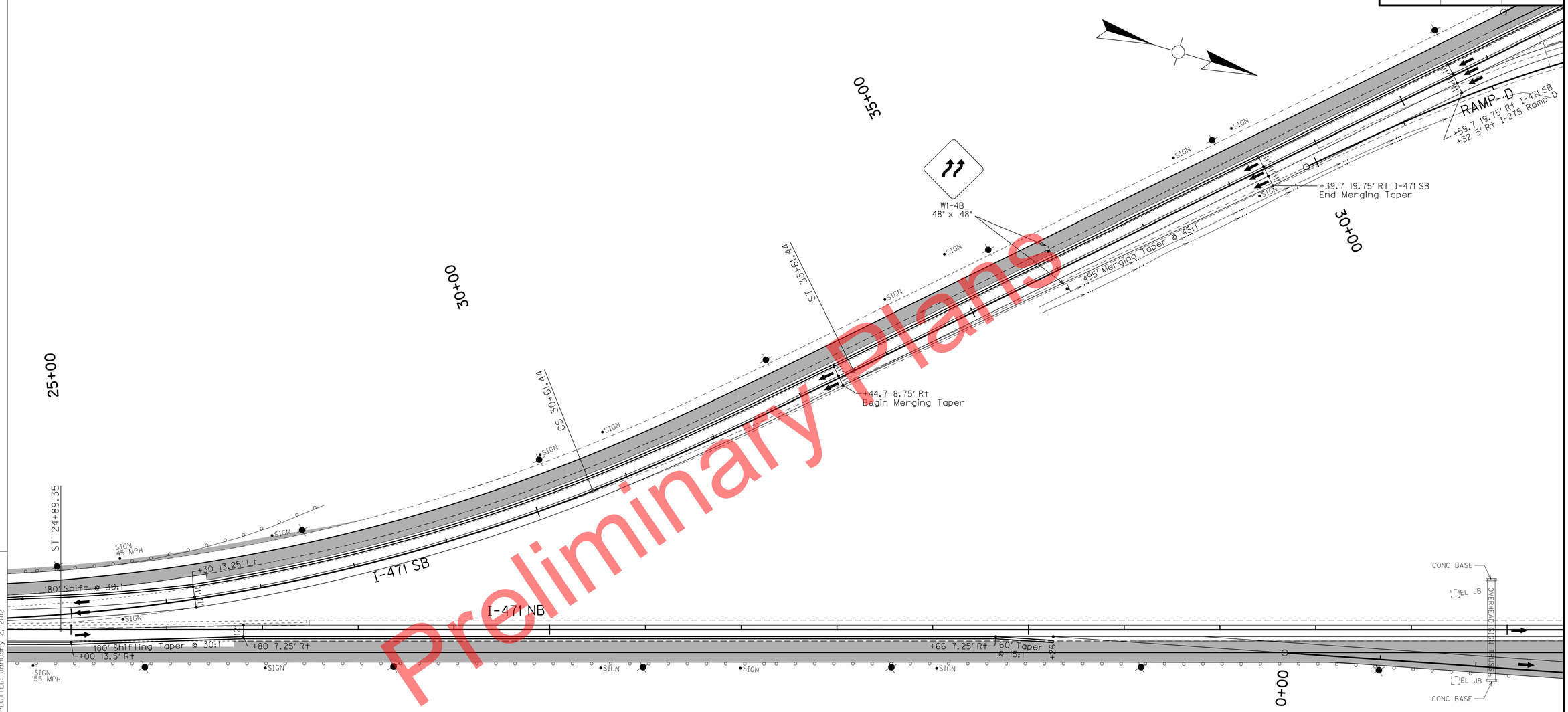

Preliminary Plans

LEGEND

- Temporary Concrete Barrier Wall
- Channelizing Device
- Construction This Phase

SIGNS WILL BE COVERED, REMOVED, STORED, OR PLACED AS DIRECTED BY THE ENGINEER.

SCALE: 1"= 50'

MAINTENANCE OF TRAFFIC PLAN-PHASE 3
I-471 NB STA 25+00 TO STA 40+00
I-471 SB STA 25+00 TO STA 40+00

FILE NAME: P:\CIVIL\471\6-2021.00\CONTRACT PLANS AND PROPOSAL\CONTRACT PLAN SET\ROADWAY\R224OMT.DGN
USER: tvonbehren
DATE PLOTTED: January 2, 2012
E-SHEET NAME:
MicroStation v8.11.7.443

COUNTY OF	ITEM NO.	SHEET NO.
CAMPBELL	6-2021.00	R225

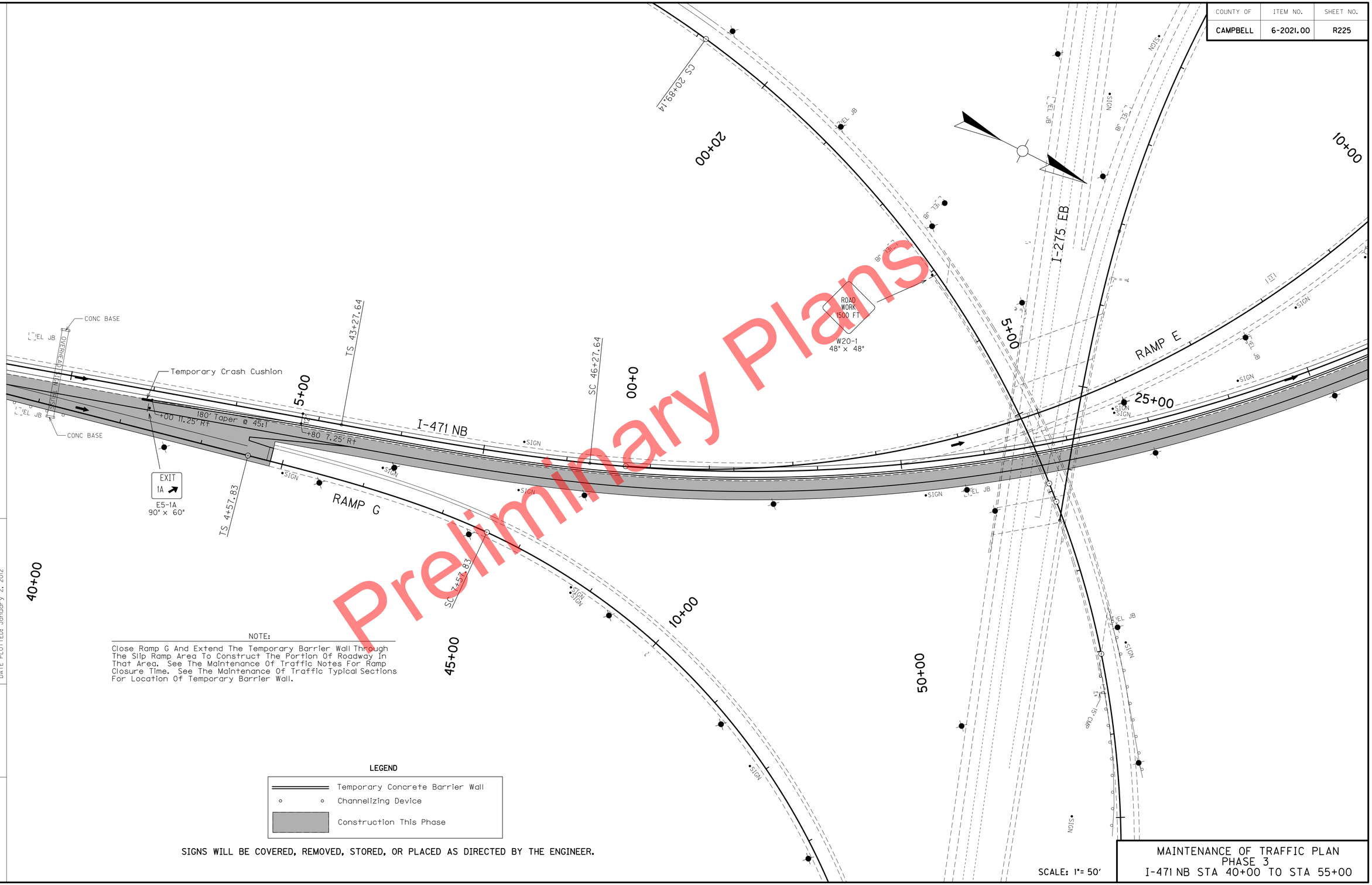

NOTE:

Close Ramp G And Extend The Temporary Barrier Wall Through The Slip Ramp Area To Construct The Portion Of Roadway In That Area. See The Maintenance Of Traffic Notes For Ramp Closure Time. See The Maintenance Of Traffic Typical Sections For Location Of Temporary Barrier Wall.

LEGEND

- Temporary Concrete Barrier Wall
- Channelizing Device
- Construction This Phase

SIGNS WILL BE COVERED, REMOVED, STORED, OR PLACED AS DIRECTED BY THE ENGINEER.

SCALE: 1"= 50'

MAINTENANCE OF TRAFFIC PLAN
PHASE 3
I-471 NB STA 40+00 TO STA 55+00

Preliminary Plans

FILE NAME: P:\CIVIL\I471\6-2021.00\CONTRACT PLANS AND PROPOSAL\CONTRACT PLAN SET\ROADWAY\R22500MT.DGN
USER: tvonbehren
DATE PLOTTED: January 2, 2012
E-SHEET NAME:
MicroStation v8.11.7.443

COUNTY OF	ITEM NO.	SHEET NO.
CAMPBELL	6-2021.00	R226

LEGEND

- Temporary Concrete Barrier Wall
- Channelizing Device
- Construction This Phase

NOTE:

Close Ramp C And Extend The Temporary Barrier Wall Through The Slip Ramp Area To Construct The Portion Of Roadway In That Area. See The Maintenance Of Traffic Notes For Ramp Closure Time. See The Maintenance Of Traffic Typical Sections For Location Of Temporary Barrier Wall.

① Place Sign At Distance Indicated On The Sign Relative To The Nearest Point Of Construction

SIGNS WILL BE COVERED, REMOVED, STORED, OR PLACED AS DIRECTED BY THE ENGINEER.

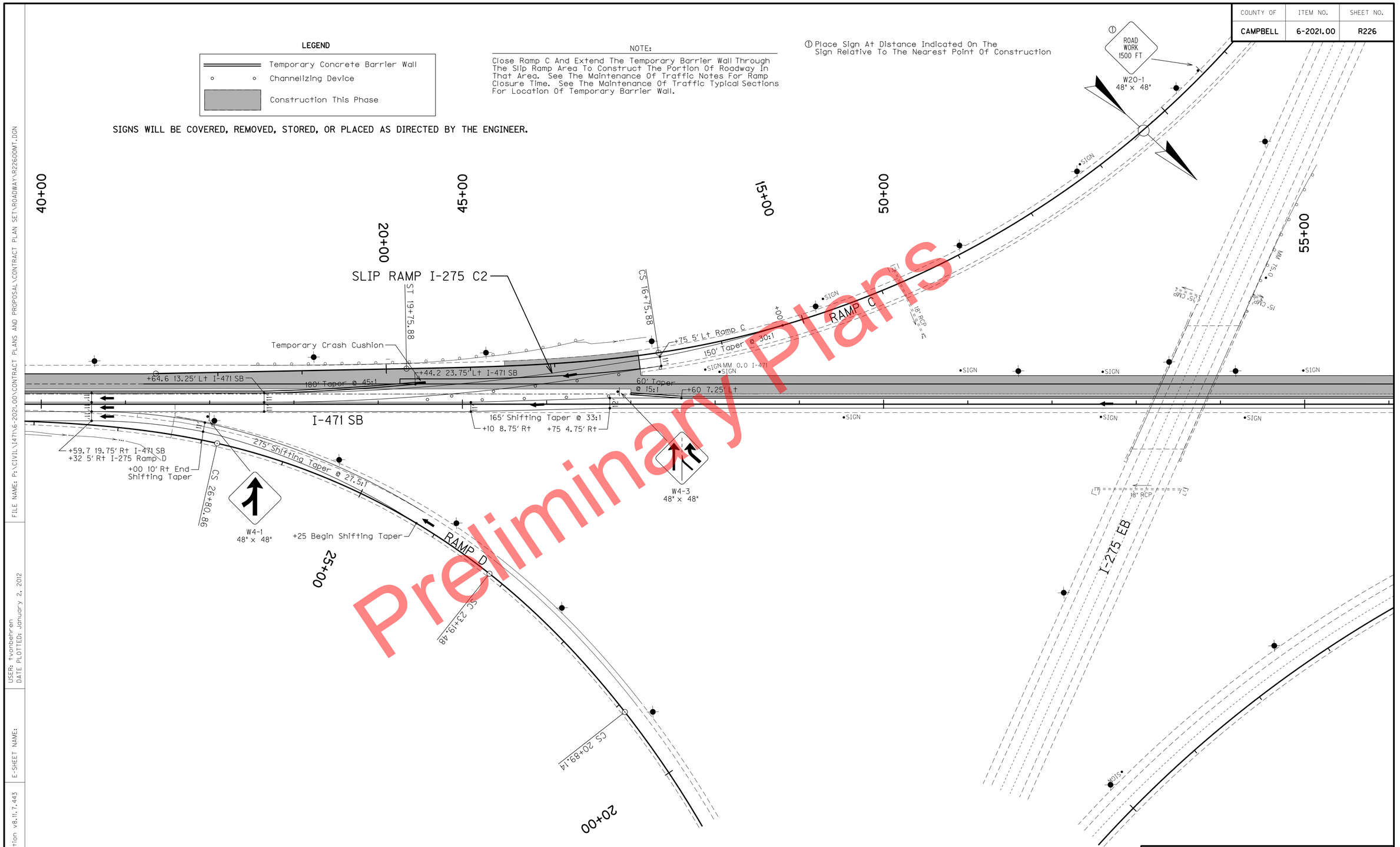

Preliminary Plans

SCALE: 1"= 50'

MAINTENANCE OF TRAFFIC PLAN
PHASE 3
I-471 SB STA 40+00 TO STA 55+00

FILE NAME: P:\CIVIL\471\N6-2021.00\CONTRACT PLANS AND PROPOSAL\CONTRACT PLAN SET\ROADWAY\R226GOMT.DGN
USER: tvonbehren
DATE PLOTTED: January 2, 2012
E-SHEET NAME:
MicroStation v8.11.7.443

COUNTY OF	ITEM NO.	SHEET NO.
CAMPBELL	6-2021.00	R227

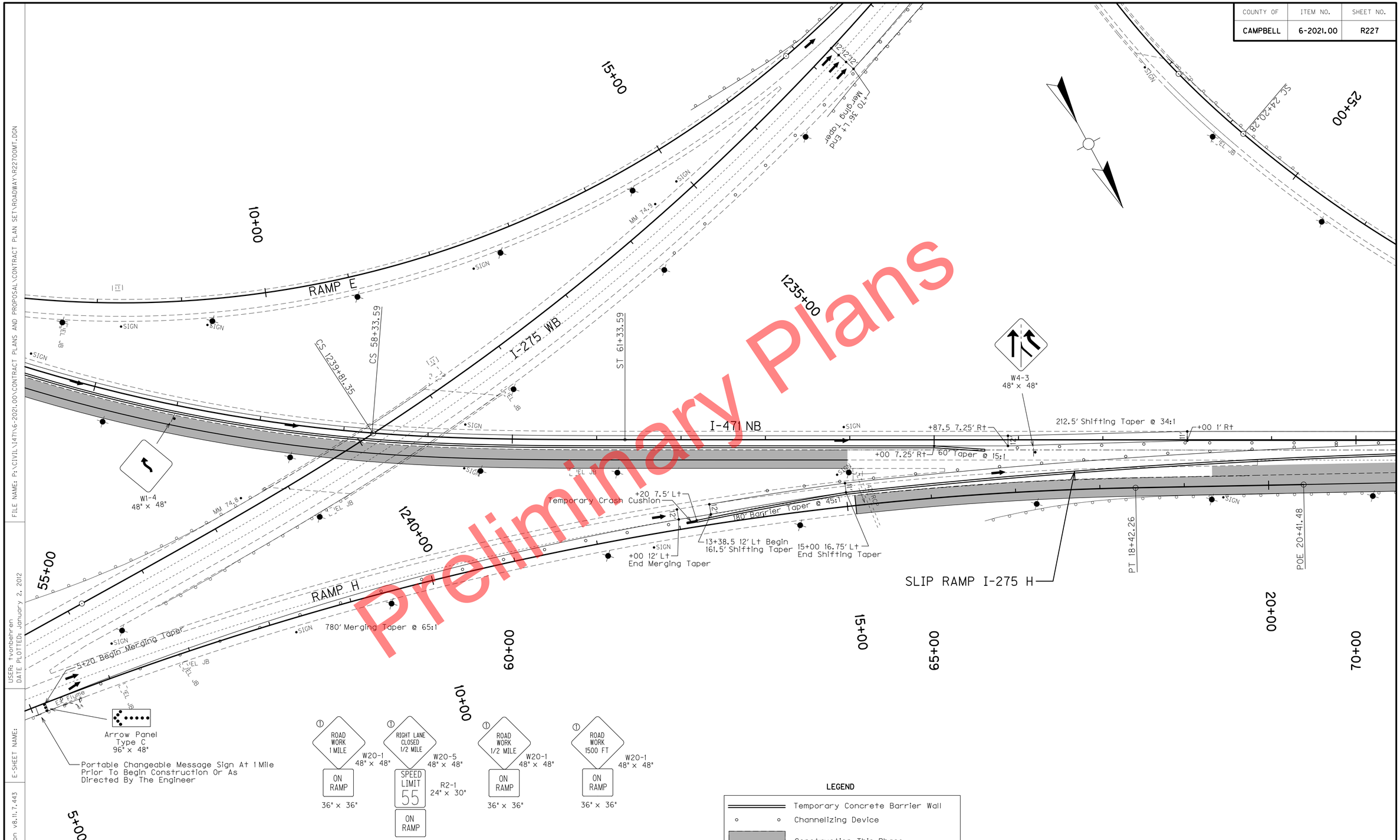

SIGNS WILL BE COVERED, REMOVED, STORED, OR PLACED AS DIRECTED BY THE ENGINEER.

SCALE: 1"= 50'

MAINTENANCE OF TRAFFIC PLAN
PHASE 3
I-471 NB STA 55+00 TO STA 70+00

FILE NAME: P:\CIVIL\I471\6-2021.00\CONTRACT PLANS AND PROPOSAL\CONTRACT PLAN SET\ROADWAY\R22700MT.DGN

USER: tvonbehren
DATE PLOTTED: January 2, 2012

E-SHEET NAME:

MicroStation v8.11.7.443

COUNTY OF	ITEM NO.	SHEET NO.
CAMPBELL	6-2021.00	R228

Preliminary Plans

FILE NAME: P:\CIVIL\147N6-2021.00\CONTRACT PLANS AND PROPOSAL\CONTRACT PLAN SET\ROADWAY\R228OMT.DGN
USER: tvonbehren
DATE PLOTTED: January 2, 2012
E-SHEET NAME:
MicroStation v8.11.7.443

10+00
15+00
1235+00
25+00
RAMP E
I-275 WB
MM 74.8
CS 1239+81.35
CS 58+33.59
ST 61+33.59
EL JB
SIGN
+10 36' Lt End Merging Taper
SC 24+20.28
I-471 NB
1240+00
55+00
RAMP H
+92.5 17.65' Lt
180' Taper @ 45:1
+72.5 12' Lt
+72.5
+00 End Merging Taper
Temporary Crash Cushion
+00 3.75' Rt
127.5' Shifting Taper @ 34:1
PT 18+42.26
POE 20+41.48
+41.5 I-275 Ramp H 3.75' Rt
5+20 24' Lt Begin Merging Taper
780' Merging Taper @ 65:1
Ex Flume
60+00
10+00
15+00
65+00
20+00
70+00
5+00

Arrow Panel
Type C
96" x 48"

Portable Changeable Message Sign At 1 Mile Prior To Begin Construction Or As Directed By The Engineer

① ROAD WORK 1 MILE W20-1 48" x 48" / ON RAMP 36" x 36"

① LEFT LANE CLOSED 1/2 MILE W20-5 48" x 48" / SPEED LIMIT 55 R2-1 24" x 30" / ON RAMP 36" x 36"

① ROAD WORK 1/2 MILE W20-1 48" x 48" / ON RAMP 36" x 36"

① ROAD WORK 1500 FT W20-1 48" x 48" / ON RAMP 36" x 36"

Construct Lane Drops Per The Standard Drawings And The M.U.T.C.D.

① Place Sign At Distance Indicated On The Sign Relative To The Nearest Point Of Construction

LEGEND

- Temporary Concrete Barrier Wall
- Channelizing Device
- Construction This Phase

SIGNS WILL BE COVERED, REMOVED, STORED, OR PLACED AS DIRECTED BY THE ENGINEER.

SCALE: 1"= 50'

MAINTENANCE OF TRAFFIC PLAN
PHASE 3a
I-471 NB STA 55+00 TO STA 70+00

COUNTY OF	ITEM NO.	SHEET NO.
CAMPBELL	6-2021.00	R229

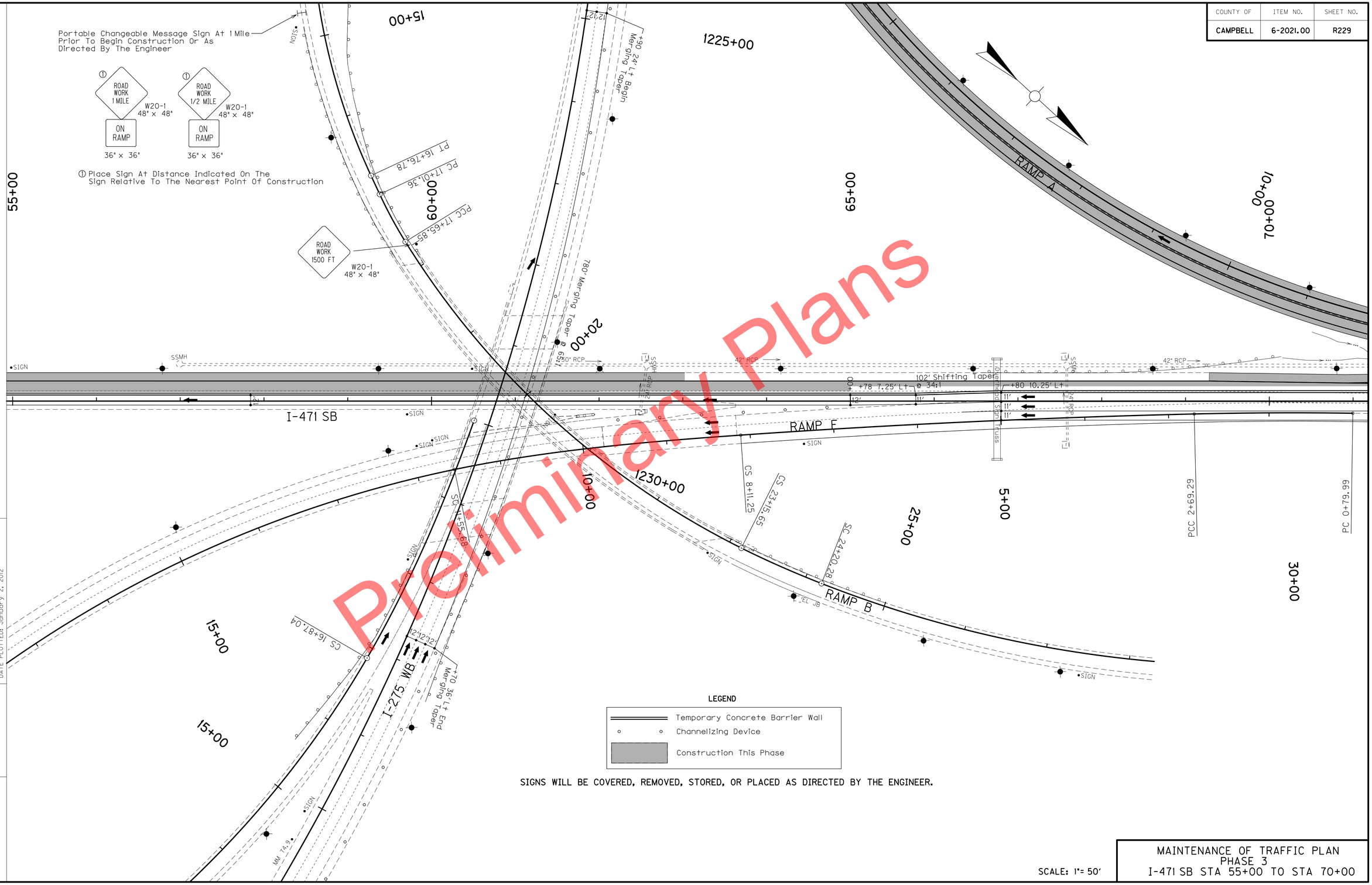

SIGNS WILL BE COVERED, REMOVED, STORED, OR PLACED AS DIRECTED BY THE ENGINEER.

SCALE: 1"= 50'

MAINTENANCE OF TRAFFIC PLAN
PHASE 3
I-471 SB STA 55+00 TO STA 70+00

Preliminary Plans

FILE NAME: P:\CIVIL\I471\6-2021.00\CONTRACT PLANS AND PROPOSAL\CONTRACT PLAN SET\ROADWAY\R22900MT.DGN
USER: tvonbehren
DATE PLOTTED: January 2, 2012
E-SHEET NAME:
MicroStation v8.11.7.443

COUNTY OF	ITEM NO.	SHEET NO.
CAMPBELL	6-2021.00	R230

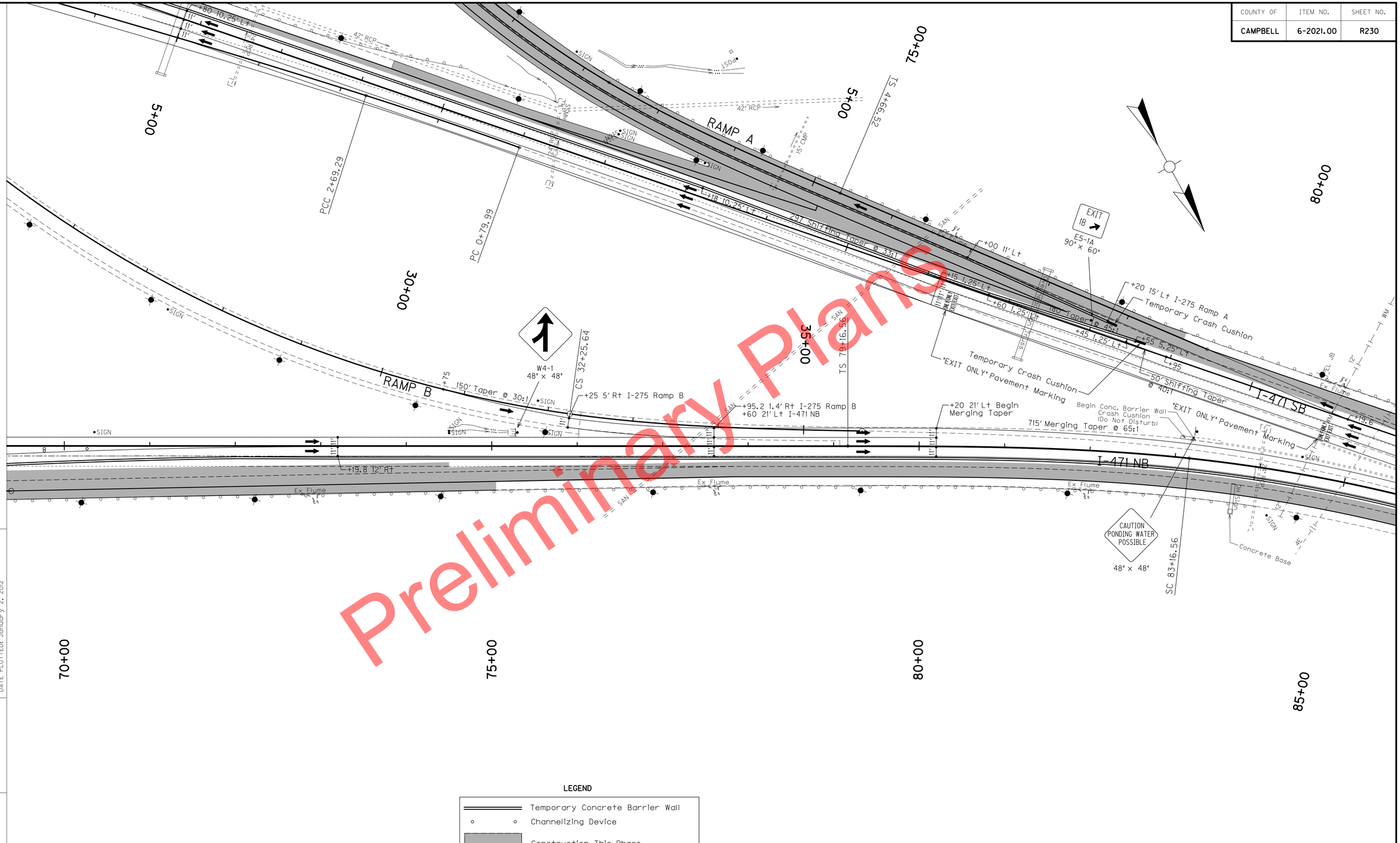

Preliminary Plans

LEGEND

═══	Temporary Concrete Barrier Wall
○ ○	Channelizing Device
▒	Construction This Phase

SIGNS WILL BE COVERED, REMOVED, STORED, OR PLACED AS DIRECTED BY THE ENGINEER.

SCALE: 1"= 50'

MAINTENANCE OF TRAFFIC PLAN
PHASE 3
I-471 NB STA 70+00 TO STA 85+00

FILE NAME: P:\CIVIL\I471\6-2021.00\CONTRACT PLANS AND PROPOSAL\CONTRACT PLAN SET\ROADWAY\R23000MT.DGN

USER: tvonbehren
DATE PLOTTED: January 2, 2012

E-SHEET NAME:

MicroStation v8.11.7.443

COUNTY OF	ITEM NO.	SHEET NO.
CAMPBELL	6-2021.00	R231

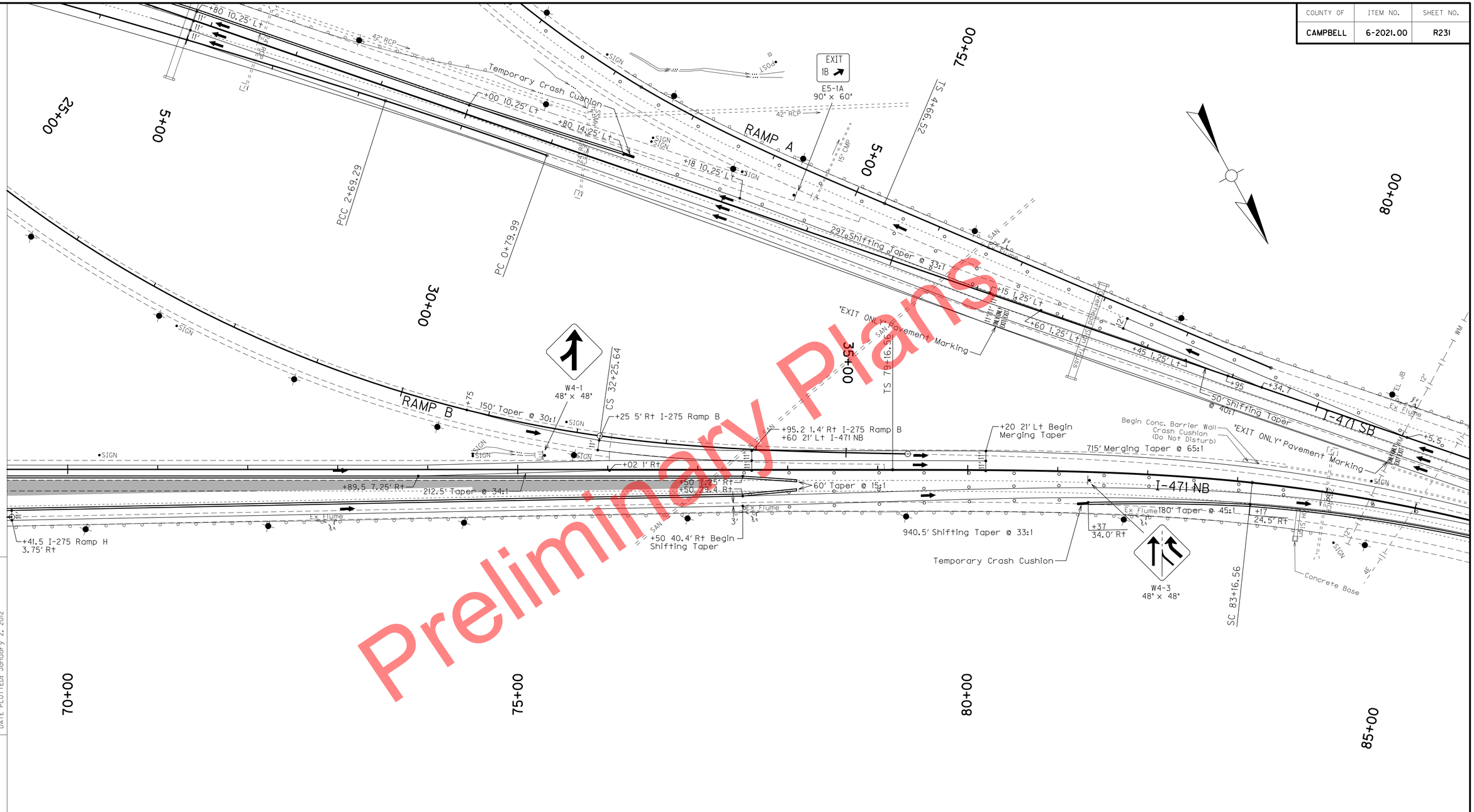

LEGEND

═══	Temporary Concrete Barrier Wall
○ ○	Channelizing Device
▒	Construction This Phase

SIGNS WILL BE COVERED, REMOVED, STORED, OR PLACED AS DIRECTED BY THE ENGINEER.

SCALE: 1"= 50'

MAINTENANCE OF TRAFFIC PLAN
PHASE 3a
I-471 NB STA 70+00 TO STA 85+00

FILE NAME: P:\CIVIL\I471\6-2021.00\CONTRACT PLANS AND PROPOSAL\CONTRACT PLAN SET\ROADWAY\R23100MT.DGN

USER: tvonbehren
DATE PLOTTED: January 2, 2012

E-SHEET NAME:

MicroStation v8.11.7.443

COUNTY OF	ITEM NO.	SHEET NO.
CAMPBELL	6-2021.00	R232

NOTE:

Close Ramp A And Extend The Temporary Barrier Wall Through The Slip Ramp Area To Construct The Portion Of Roadway In That Area. See The Maintenance Of Traffic Notes For Ramp Closure Time. See The Maintenance Of Traffic Typical Sections For Location Of Temporary Barrier Wall.

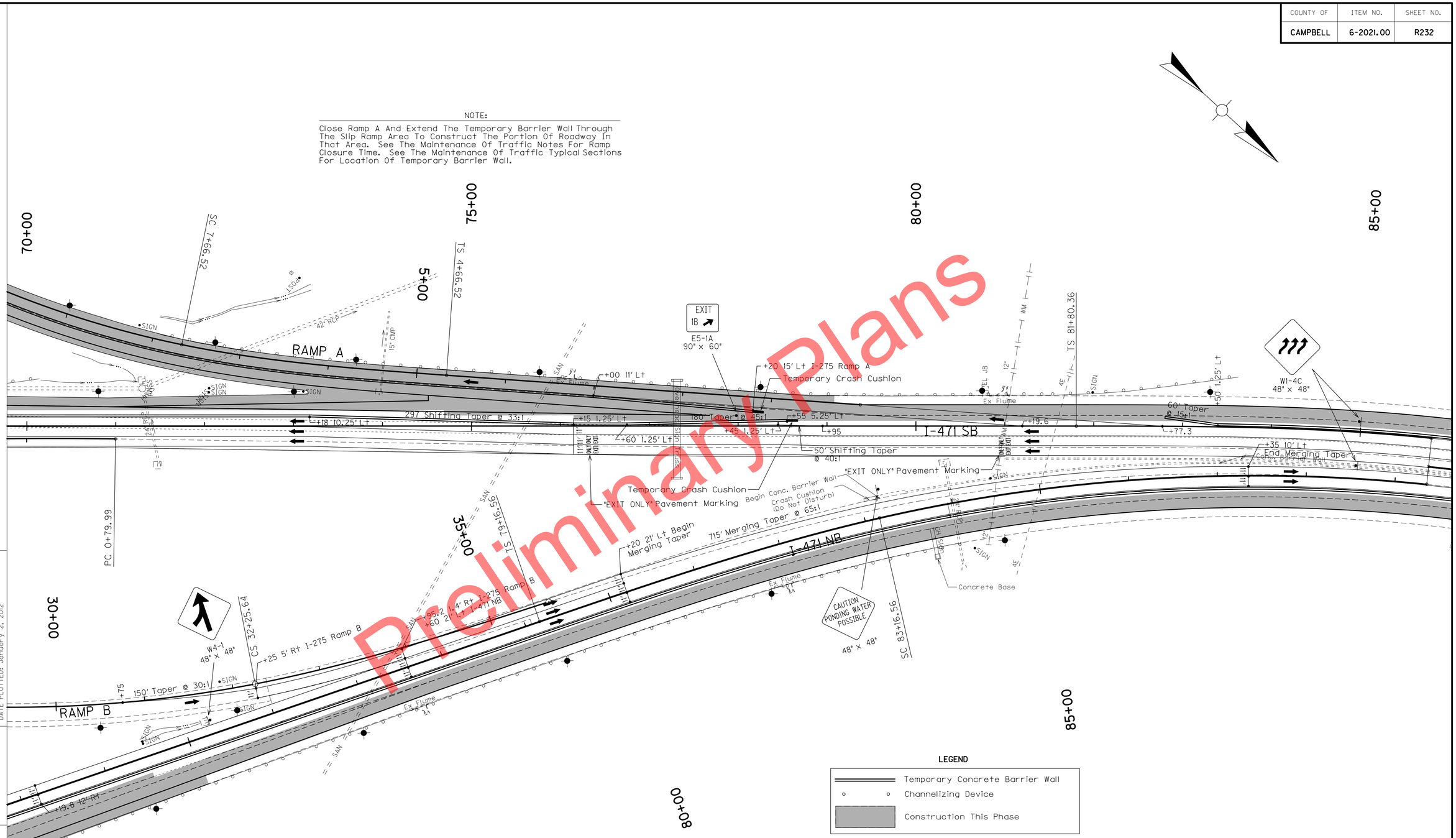

Preliminary Plans

LEGEND

- Temporary Concrete Barrier Wall
- Channelizing Device
- Construction This Phase

SIGNS WILL BE COVERED, REMOVED, STORED, OR PLACED AS DIRECTED BY THE ENGINEER.

SCALE: 1"= 50'

MAINTENANCE OF TRAFFIC PLAN
PHASE 3
I-471 SB STA 70+00 TO STA 85+00

MicroStation v8.11.7.443
E-SHEET NAME:
USER: Yvonbehren
DATE PLOTTED: January 2, 2012
FILE NAME: P:\CIVIL\147IN6-2021.00\CONTRACT PLANS AND PROPOSAL\CONTRACT PLAN SET\ROADWAY\R232OMT.DGN

COUNTY OF	ITEM NO.	SHEET NO.
CAMPBELL	6-2021.00	R233

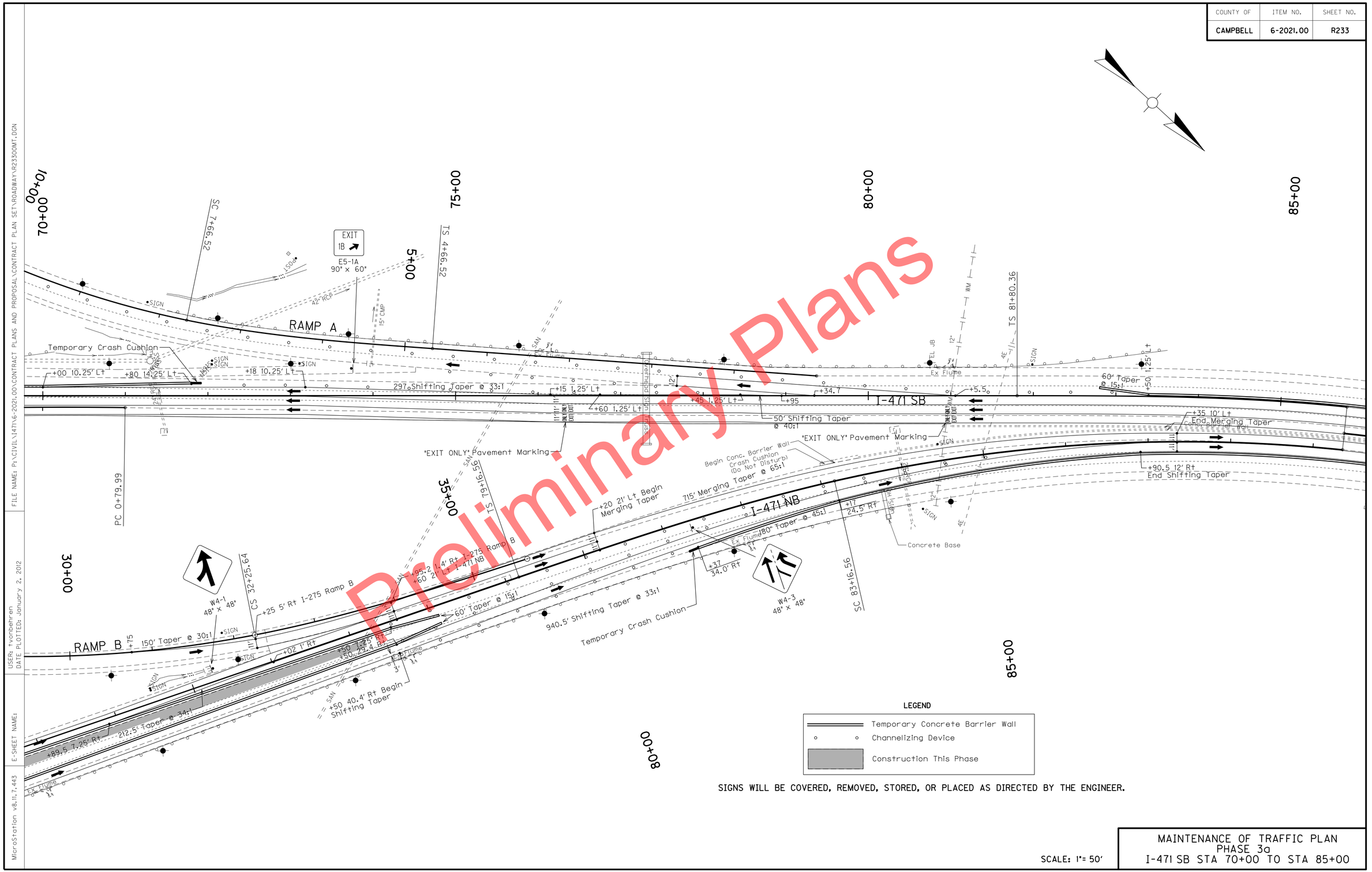

Preliminary Plans

LEGEND

- Temporary Concrete Barrier Wall
- Channelizing Device
- Construction This Phase

SIGNS WILL BE COVERED, REMOVED, STORED, OR PLACED AS DIRECTED BY THE ENGINEER.

SCALE: 1"= 50'

MAINTENANCE OF TRAFFIC PLAN
PHASE 3a
I-471 SB STA 70+00 TO STA 85+00

MicroStation v8.11.7.443
E-SHEET NAME:
USER: tvonbehren
DATE PLOTTED: January 2, 2012
FILE NAME: P:\CIVIL\147IN6-2021.00\CONTRACT PLANS AND PROPOSAL\CONTRACT PLAN SET\ROADWAY\R233OMT.DGN

COUNTY OF	ITEM NO.	SHEET NO.
CAMPBELL	6-2021.00	R234

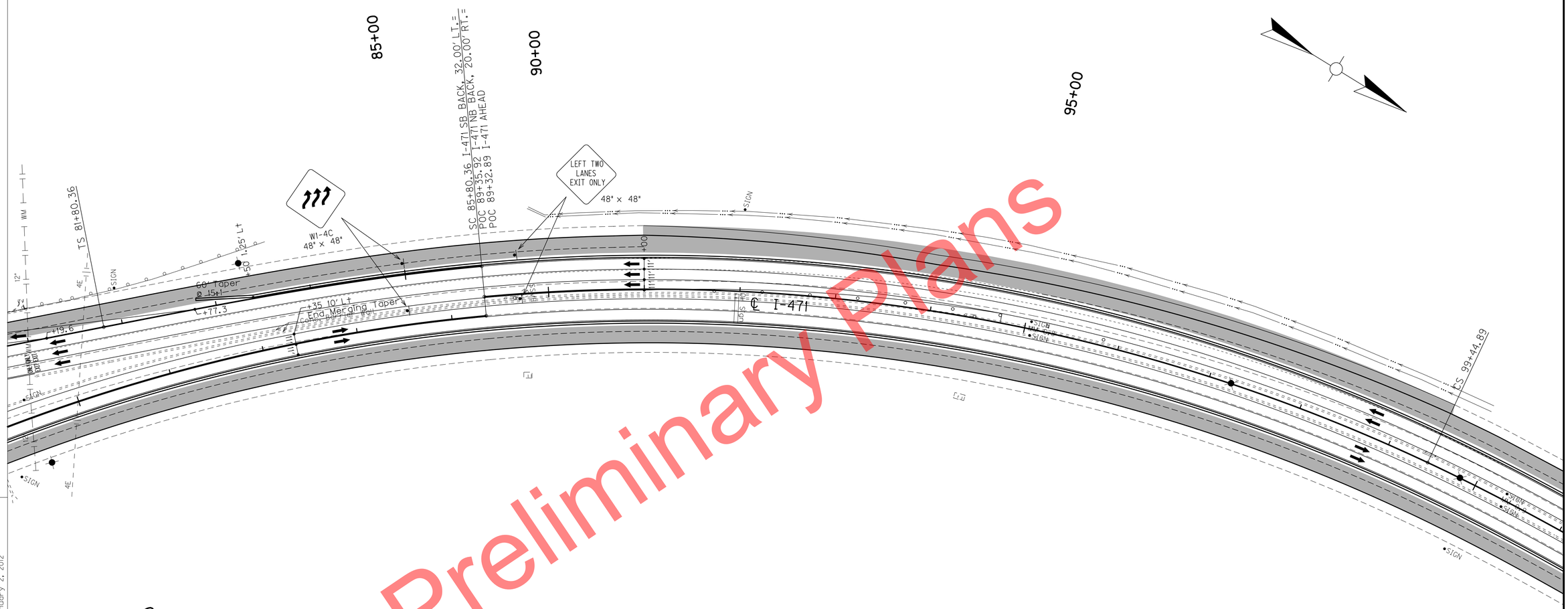

Preliminary Plans

LEGEND

═══	Temporary Concrete Barrier Wall
○ ○	Channelizing Device
▒	Construction This Phase

SIGNS WILL BE COVERED, REMOVED, STORED, OR PLACED AS DIRECTED BY THE ENGINEER.

SCALE: 1"= 50'

MAINTENANCE OF TRAFFIC PLAN - PHASE 3

I-471 NB STA 85+00 TO STA 89+35.95
I-471 SB STA 85+00 TO STA 85+80.36
I-471 STA 89+32.89 TO STA 100+00

FILE NAME: P:\CIVIL\I471\6-2021.00\CONTRACT PLANS AND PROPOSAL\CONTRACT PLAN SET\ROADWAY\R23400MT.DGN
USER: tvonbehren
DATE PLOTTED: January 2, 2012
E-SHEET NAME:
MicroStation v8.11.7.443

COUNTY OF	ITEM NO.	SHEET NO.
CAMPBELL	6-2021.00	R235

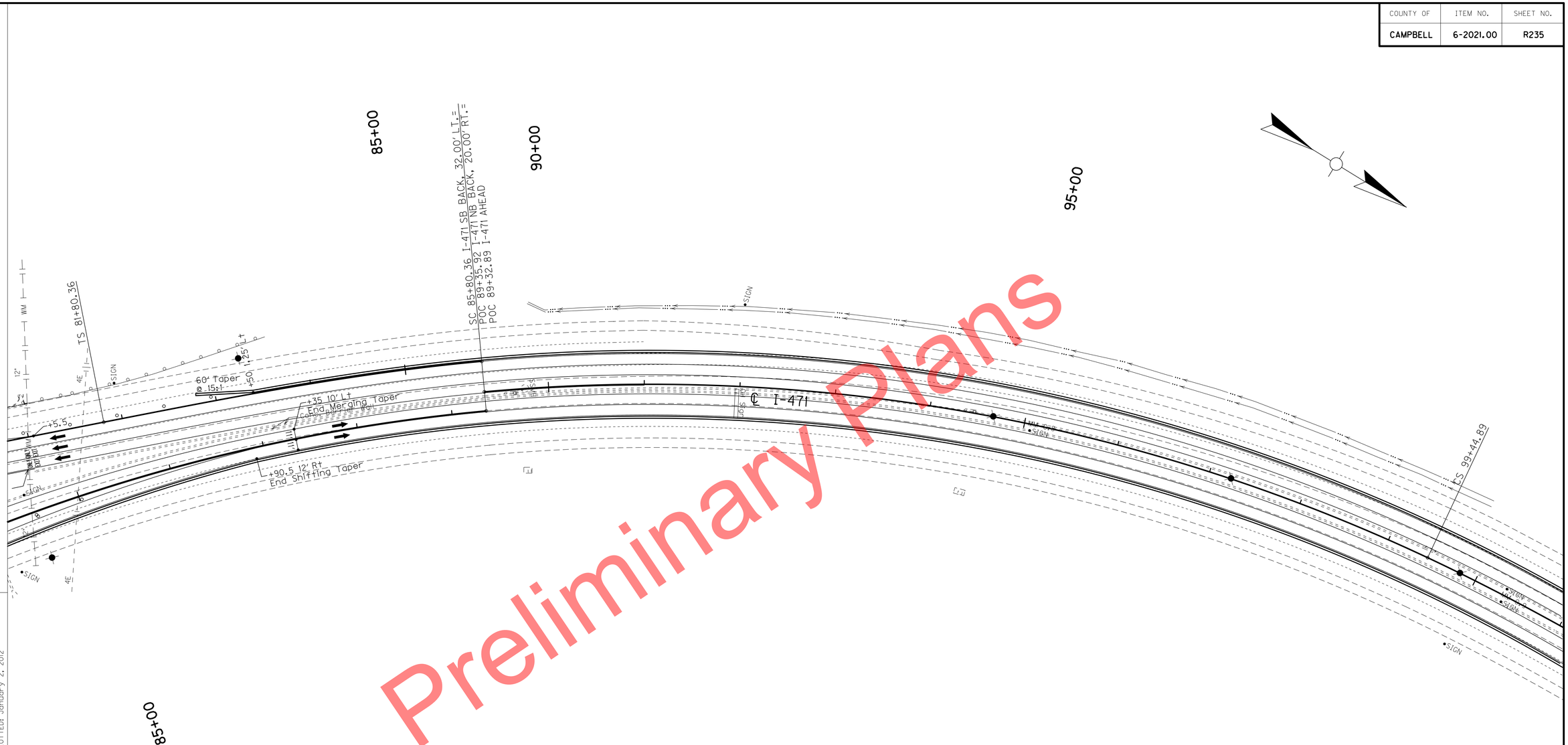

Preliminary Plans

LEGEND

- Temporary Concrete Barrier Wall
- Channelizing Device
- Construction This Phase

SIGNS WILL BE COVERED, REMOVED, STORED, OR PLACED AS DIRECTED BY THE ENGINEER.

SCALE: 1"= 50'

MAINTENANCE OF TRAFFIC PLAN - PHASE 3a

I-471 NB STA 85+00 TO STA 89+35.95
I-471 SB STA 85+00 TO STA 85+80.36
I-471 STA 89+32.89 TO STA 100+00

MicroStation v8.11.7.443
E-SHEET NAME:
USER: tvonbehren
DATE PLOTTED: January 2, 2012
FILE NAME: P:\CIVIL\471\6-2021.00\CONTRACT PLANS AND PROPOSAL\CONTRACT PLAN SET\ROADWAY\R235OMT.DGN

COUNTY OF	ITEM NO.	SHEET NO.
CAMPBELL	6-2021.00	R236

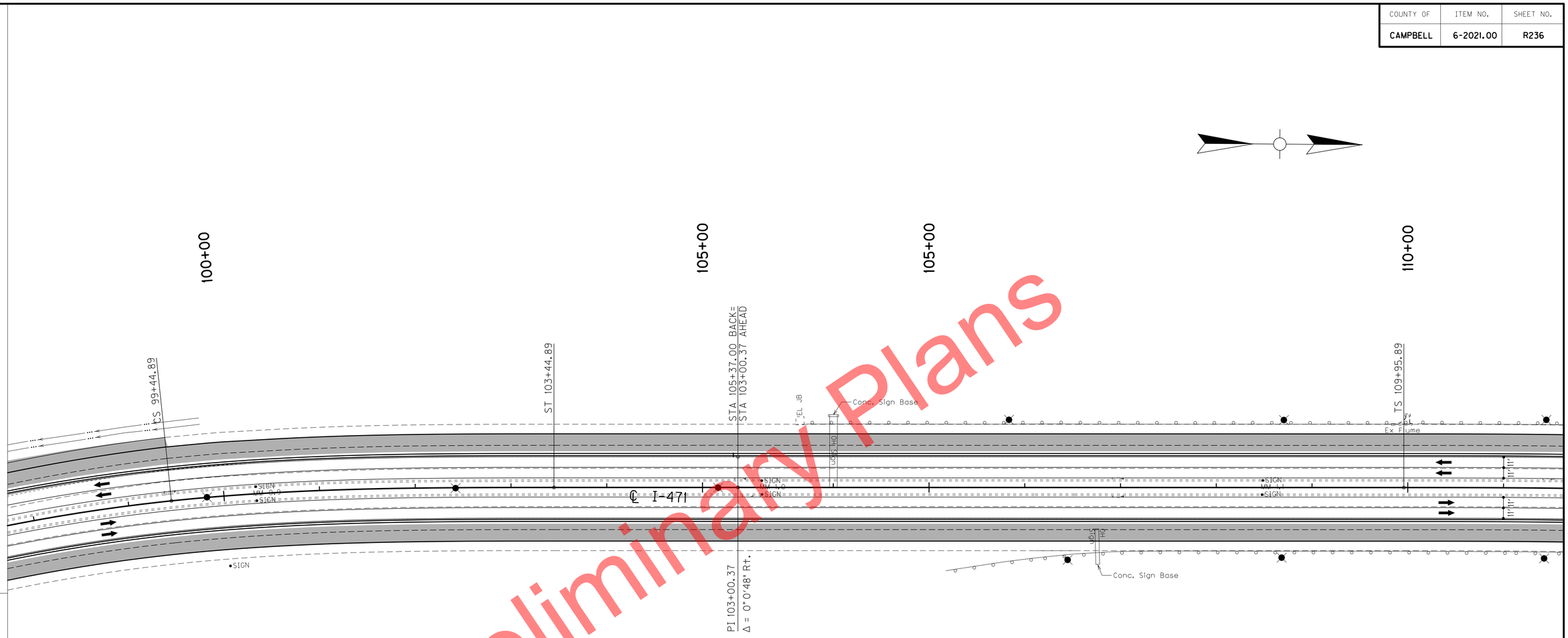

Preliminary Plans

LEGEND

- Temporary Concrete Barrier Wall
- Channelizing Device
- Construction This Phase

SIGNS WILL BE COVERED, REMOVED, STORED, OR PLACED AS DIRECTED BY THE ENGINEER.

SCALE: 1"= 50'

MAINTENANCE OF TRAFFIC PLAN
PHASE 3
I-471 STA 100+00 TO STA 110+00

FILE NAME: P:\CIVIL\147IN6-2021.00\CONTRACT PLANS AND PROPOSAL\CONTRACT PLAN SET\ROADWAY\R236GOMT.DGN
USER: tvonbehren
DATE PLOTTED: January 2, 2012
E-SHEET NAME:
MicroStation v8.11.7.443

COUNTY OF	ITEM NO.	SHEET NO.
CAMPBELL	6-2021.00	R237

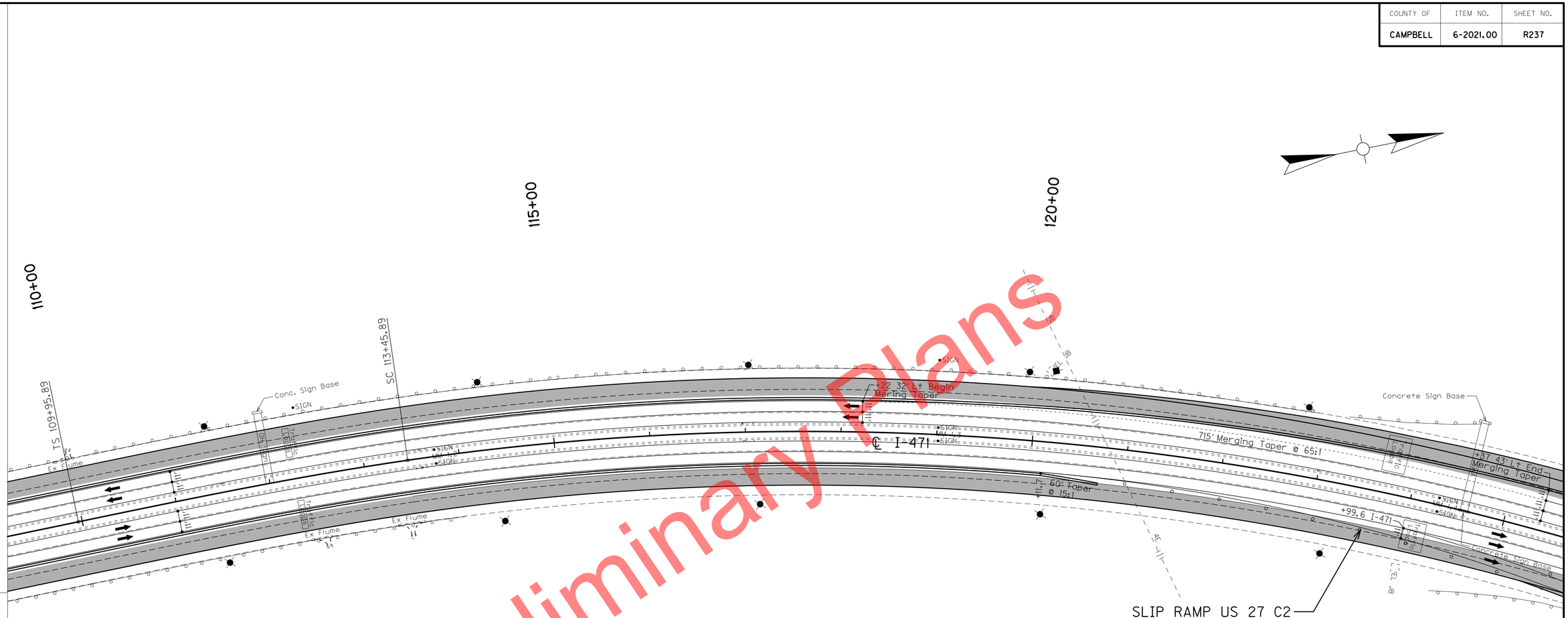

Preliminary Plans

LEGEND

- Temporary Concrete Barrier Wall
- Channelizing Device
- Construction This Phase

SIGNS WILL BE COVERED, REMOVED, STORED, OR PLACED AS DIRECTED BY THE ENGINEER.

SCALE: 1"= 50'

MAINTENANCE OF TRAFFIC PLAN
PHASE 3
I-471 STA 110+00 TO STA 125+00

FILE NAME: P:\CIVIL\147IN6-2021.00\CONTRACT PLANS AND PROPOSAL\CONTRACT PLAN SET\ROADWAY\R237GOMT.DGN
USER: tvonbehren
DATE PLOTTED: January 2, 2012
E-SHEET NAME:
MicroStation v8.11.7.443

COUNTY OF	ITEM NO.	SHEET NO.
CAMPBELL	6-2021.00	R238

NOTE:
Close US 27 Ramps C And D And Extend The Temporary Barrier Wall Through The Slip Ramp Area To Construct The Ramp And The Portion Of Roadway In That Area. See The Maintenance Of Traffic Notes For Ramp Closure Time. See The Maintenance Of Traffic Typical Sections For Location Of Temporary Barrier Wall.

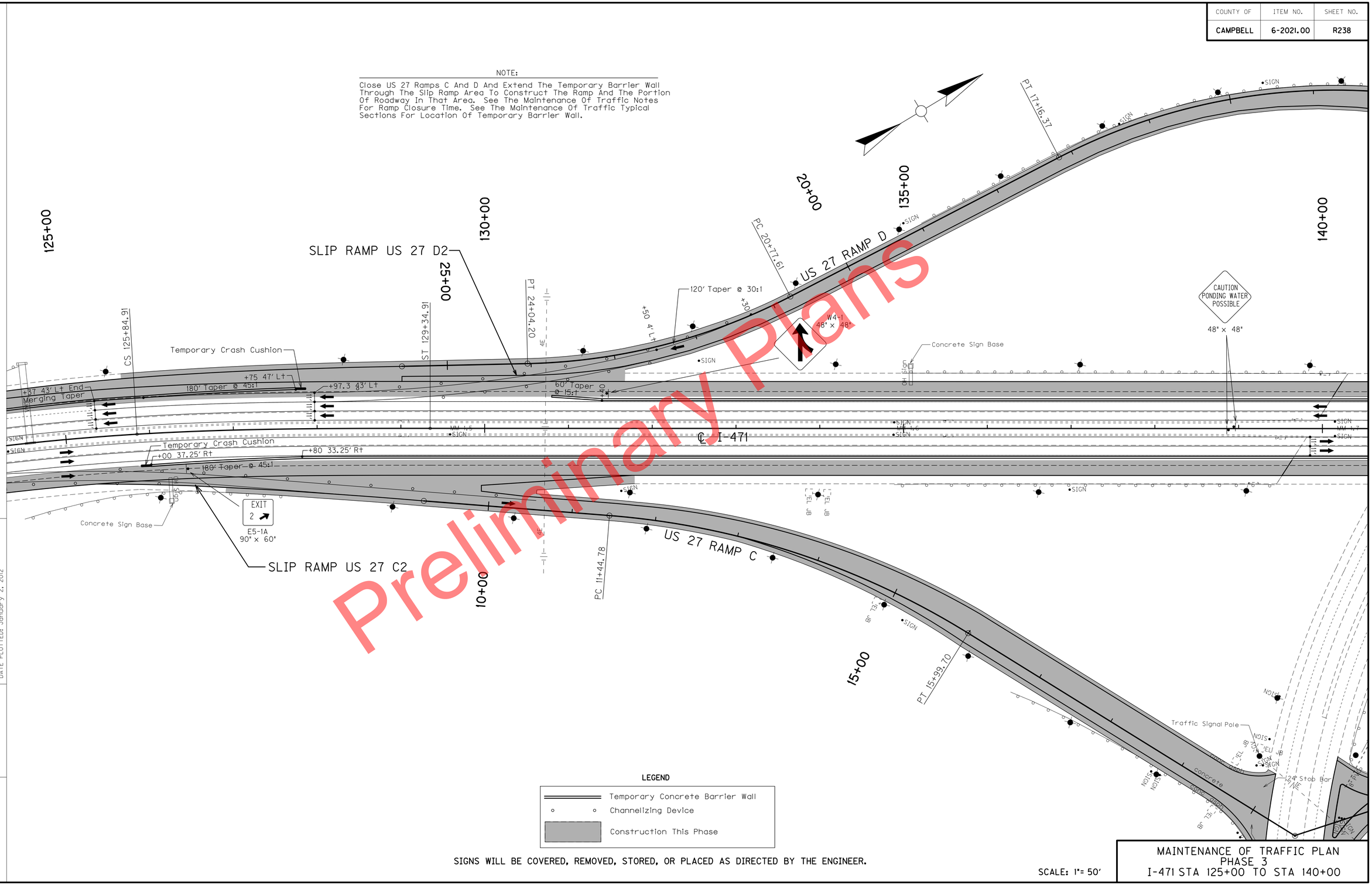

LEGEND

- Temporary Concrete Barrier Wall
- Channelizing Device
- Construction This Phase

SIGNS WILL BE COVERED, REMOVED, STORED, OR PLACED AS DIRECTED BY THE ENGINEER.

SCALE: 1"= 50'

MAINTENANCE OF TRAFFIC PLAN
PHASE 3
I-471 STA 125+00 TO STA 140+00

Preliminary Plans

FILE NAME: P:\CIVIL\147N6-2021.00\CONTRACT PLANS AND PROPOSAL\CONTRACT PLAN SET\ROADWAY\R238OMT.DGN
USER: tvonbehren
DATE PLOTTED: January 2, 2012
E-SHEET NAME:
MicroStation v8.11.7.443

COUNTY OF	ITEM NO.	SHEET NO.
CAMPBELL	6-2021.00	R239

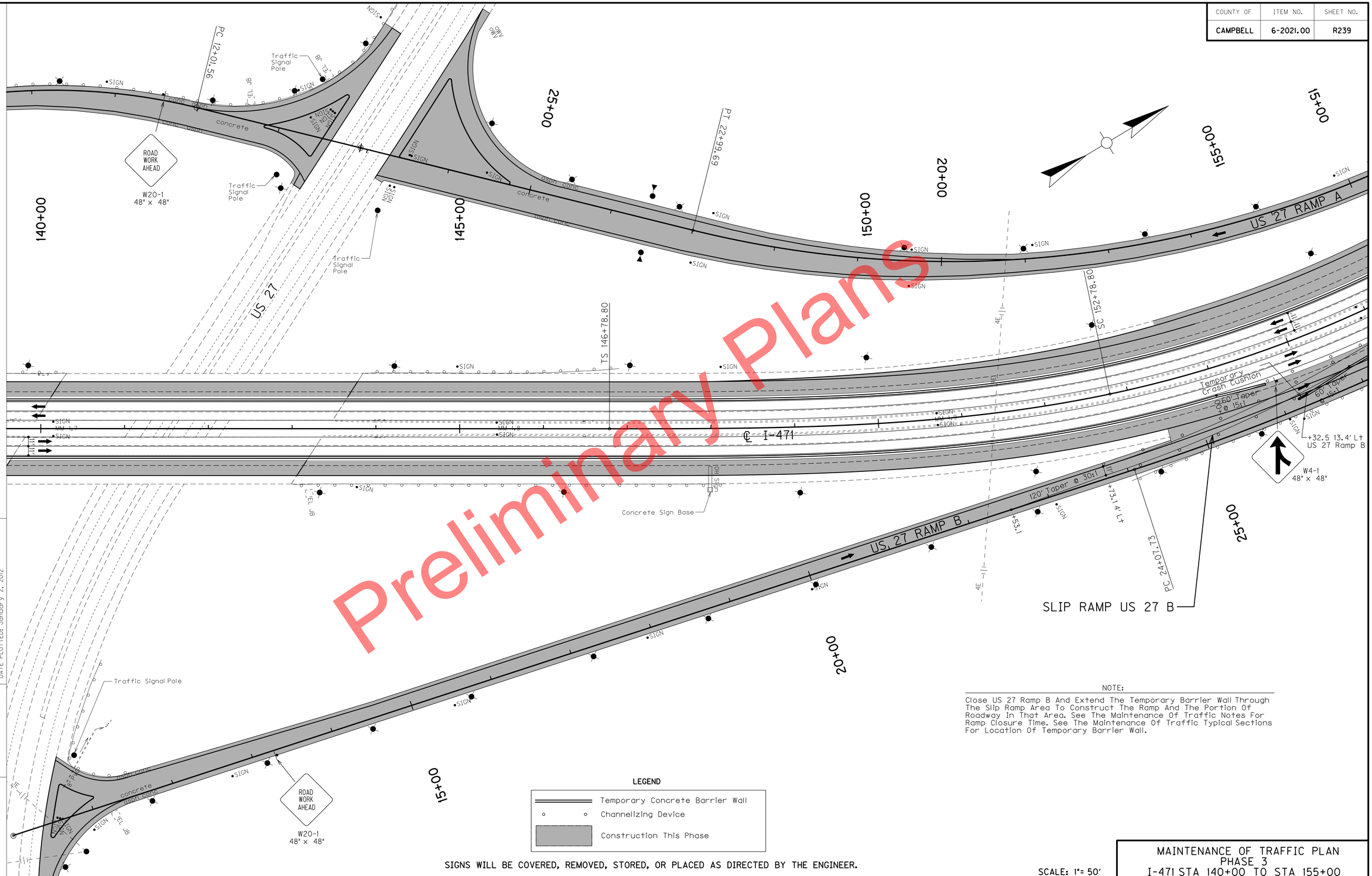

Preliminary Plans

NOTE:

Close US 27 Ramp B And Extend The Temporary Barrier Wall Through The Slip Ramp Area To Construct The Ramp And The Portion Of Roadway In That Area. See The Maintenance Of Traffic Notes For Ramp Closure Time. See The Maintenance Of Traffic Typical Sections For Location Of Temporary Barrier Wall.

LEGEND

- Temporary Concrete Barrier Wall
- Channelizing Device
- Construction This Phase

SIGNS WILL BE COVERED, REMOVED, STORED, OR PLACED AS DIRECTED BY THE ENGINEER.

SCALE: 1"= 50'

MAINTENANCE OF TRAFFIC PLAN
PHASE 3
I-471 STA 140+00 TO STA 155+00

FILE NAME: P:\CIVIL\I471\6-2021.00\CONTRACT PLANS AND PROPOSAL\CONTRACT PLAN SET\ROADWAY\R239OOMT.DGN
USER: tvonbehren
DATE PLOTTED: January 2, 2012
E-SHEET NAME:
MicroStation v8.11.7.443

COUNTY OF	ITEM NO.	SHEET NO.
CAMPBELL	6-2021.00	R240

NOTE:

Close US 27 Ramps A And B And Extend The Temporary Barrier Wall Through The Slip Ramp Area To Construct The Ramp And The Portion Of Roadway In That Area. See The Maintenance Of Traffic Notes For Ramp Closure Time. See The Maintenance Of Traffic Typical Sections For Location Of Temporary Barrier Wall.

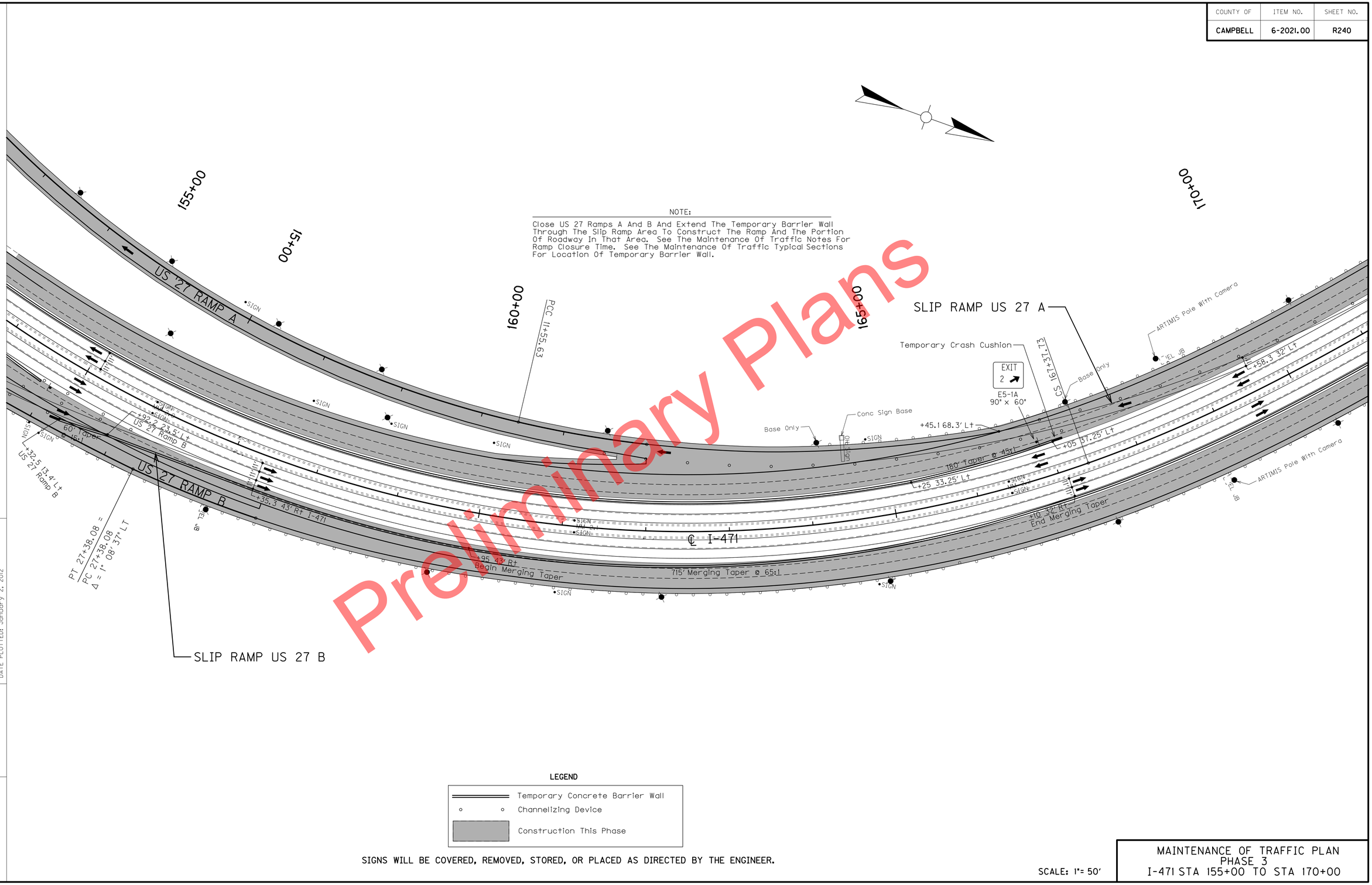

Preliminary Plans

LEGEND

- Temporary Concrete Barrier Wall
- Channelizing Device
- Construction This Phase

SIGNS WILL BE COVERED, REMOVED, STORED, OR PLACED AS DIRECTED BY THE ENGINEER.

SCALE: 1"= 50'

MAINTENANCE OF TRAFFIC PLAN
PHASE 3
I-471 STA 155+00 TO STA 170+00

MicroStation v8.11.7.443
E-SHEET NAME:
USER: tvonbehren
DATE PLOTTED: January 2, 2012
FILE NAME: P:\CIVIL\147\N6-2021.00\CONTRACT PLANS AND PROPOSAL\CONTRACT PLAN SET\ROADWAY\R240GOMT.DGN

COUNTY OF	ITEM NO.	SHEET NO.
CAMPBELL	6-2021.00	R241

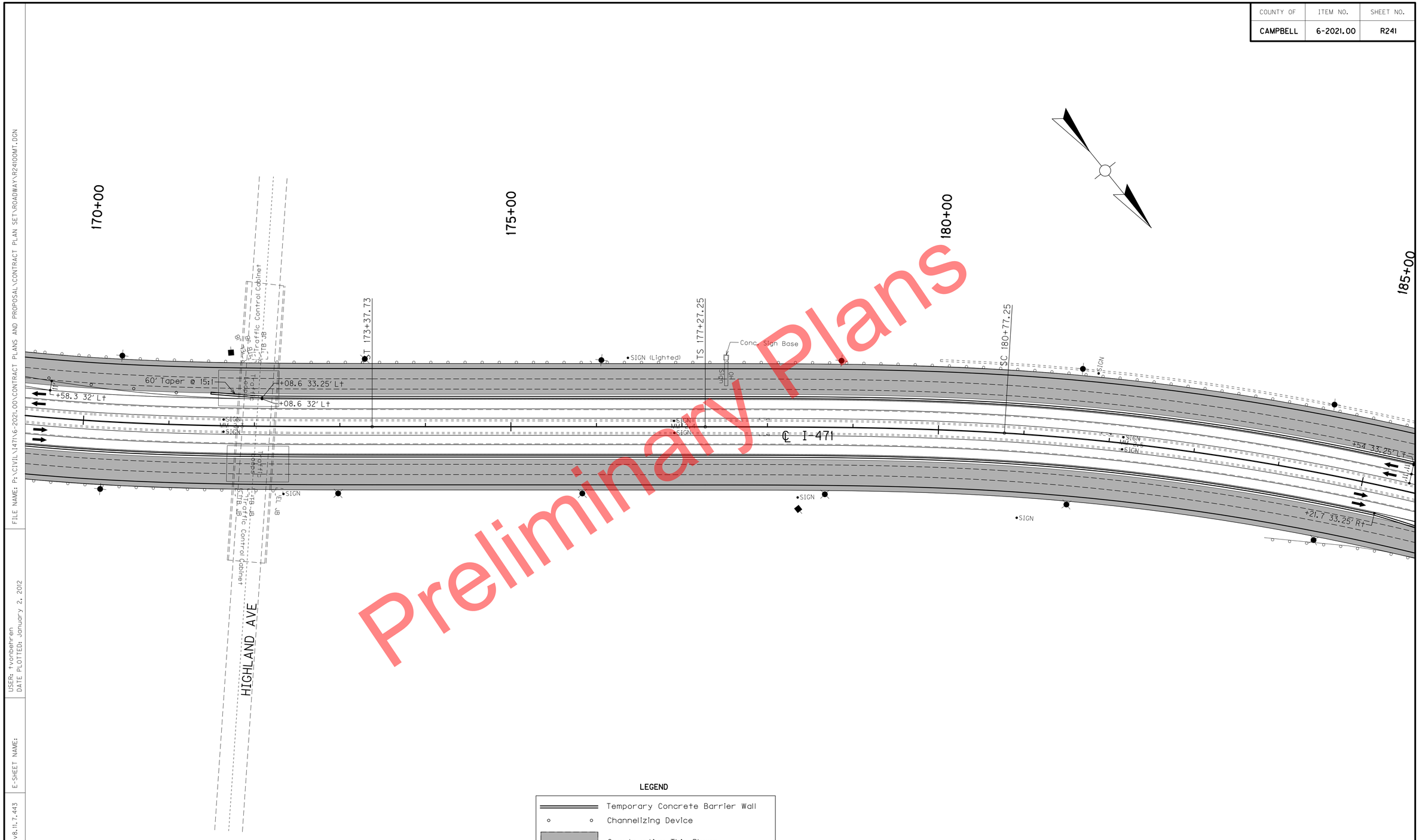

Preliminary Plans

LEGEND

- Temporary Concrete Barrier Wall
- Channelizing Device
- Construction This Phase

SIGNS WILL BE COVERED, REMOVED, STORED, OR PLACED AS DIRECTED BY THE ENGINEER.

SCALE: 1"= 50'

MAINTENANCE OF TRAFFIC PLAN
PHASE 3
I-471 STA 170+00 TO STA 185+00

FILE NAME: P:\CIVIL\147N\6-2021.00\CONTRACT PLANS AND PROPOSAL\CONTRACT PLAN SET\ROADWAY\R241OOMT.DGN
USER: tvonbehren
DATE PLOTTED: January 2, 2012
E-SHEET NAME:
MicroStation v8.11.7.443

COUNTY OF	ITEM NO.	SHEET NO.
CAMPBELL	6-2021.00	R242

NOTE:

Close GA Ramps E And F And Extend The Temporary Barrier Wall Through The Slip Ramp Area To Construct The Ramp And The Portion Of Roadway In That Area. See The Maintenance Of Traffic Notes For Ramp Closure Time. See The Maintenance Of Traffic Typical Sections For Location Of Temporary Barrier Wall.

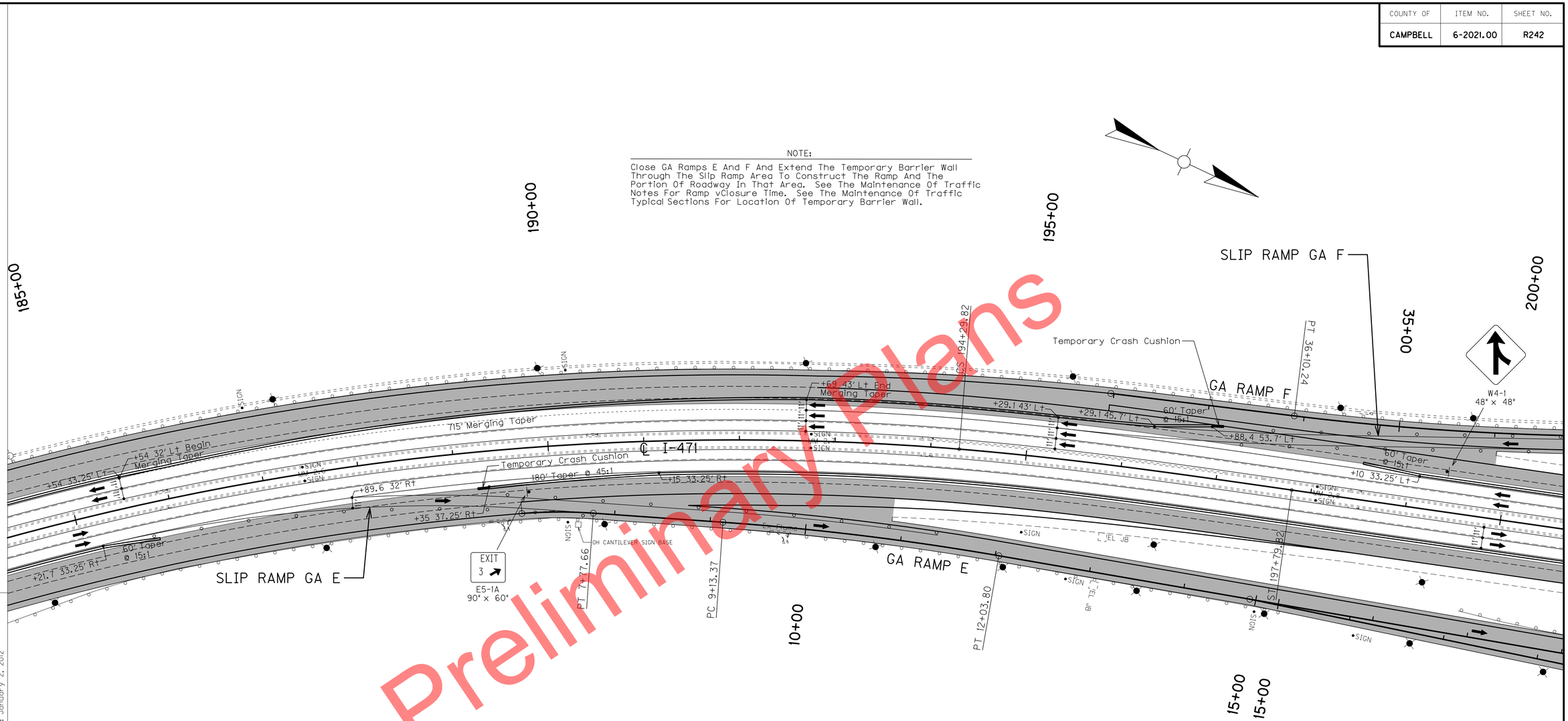

Preliminary Plans

LEGEND

- Temporary Concrete Barrier Wall
- Channelizing Device
- Construction This Phase

SIGNS WILL BE COVERED, REMOVED, STORED, OR PLACED AS DIRECTED BY THE ENGINEER.

SCALE: 1"= 50'

MAINTENANCE OF TRAFFIC PLAN
PHASE 3
I-471 STA 185+00 TO STA 200+00

FILE NAME: P:\CIVIL\471\N6-2021.00\CONTRACT PLANS AND PROPOSAL\CONTRACT PLAN SET\ROADWAY\R242OMT.DGN
USER: tvonbehren
DATE PLOTTED: January 2, 2012
E-SHEET NAME:
MicroStation v8.11.7.443

COUNTY OF	ITEM NO.	SHEET NO.
CAMPBELL	6-2021.00	R243

LEGEND

- Temporary Concrete Barrier Wall
- Channelizing Device
- Construction This Phase

SIGNS WILL BE COVERED, REMOVED, STORED, OR PLACED AS DIRECTED BY THE ENGINEER.

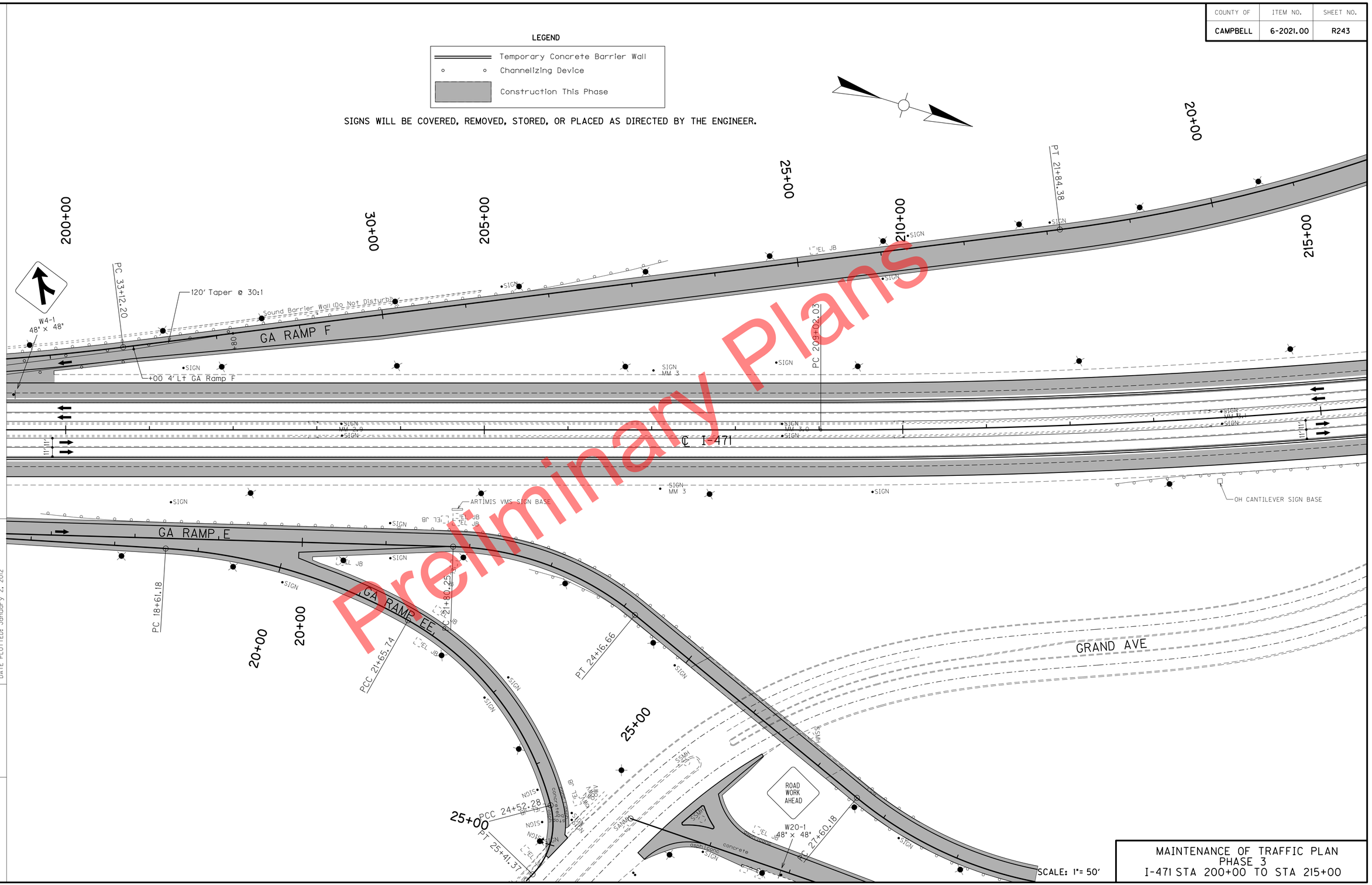

Preliminary Plans

MAINTENANCE OF TRAFFIC PLAN
PHASE 3
I-471 STA 200+00 TO STA 215+00

FILE NAME: P:\CIVIL\147IN6-2021.00\CONTRACT PLANS AND PROPOSAL\CONTRACT PLAN SET\ROADWAY\R243OMT.DGN
USER: tvonbehren
DATE PLOTTED: January 2, 2012
E-SHEET NAME:
MicroStation v8.11.7.443

COUNTY OF	ITEM NO.	SHEET NO.
CAMPBELL	6-2021.00	R244

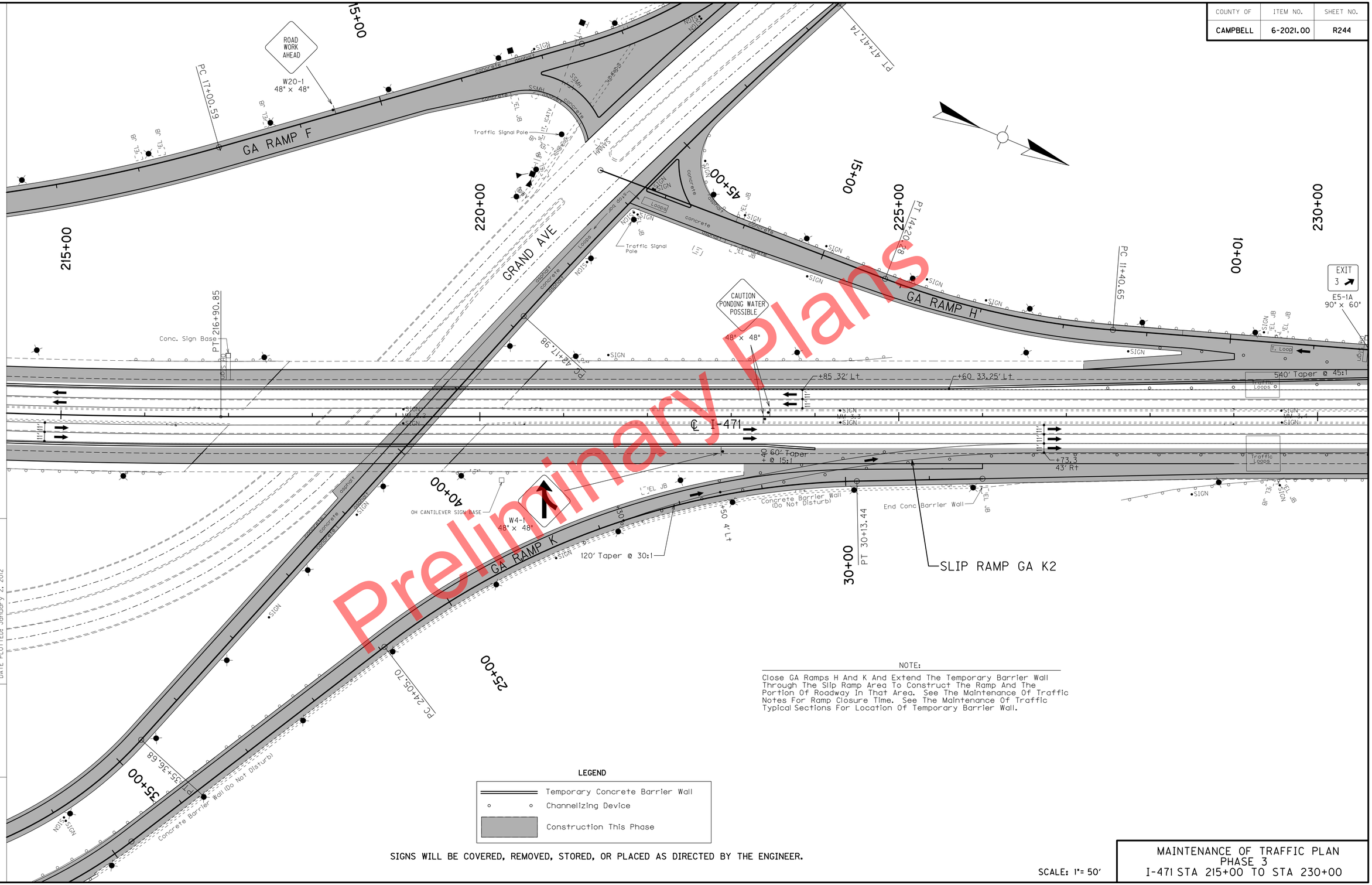

Preliminary Plans

NOTE:

Close GA Ramps H And K And Extend The Temporary Barrier Wall Through The Slip Ramp Area To Construct The Ramp And The Portion Of Roadway In That Area. See The Maintenance Of Traffic Notes For Ramp Closure Time. See The Maintenance Of Traffic Typical Sections For Location Of Temporary Barrier Wall.

LEGEND

- Temporary Concrete Barrier Wall
- Channelizing Device
- Construction This Phase

SIGNS WILL BE COVERED, REMOVED, STORED, OR PLACED AS DIRECTED BY THE ENGINEER.

SCALE: 1"= 50'

MAINTENANCE OF TRAFFIC PLAN
PHASE 3
I-471 STA 215+00 TO STA 230+00

FILE NAME: P:\CIVIL\I471\6-2021.00\CONTRACT PLANS AND PROPOSAL\CONTRACT PLAN SET\ROADWAY\R24400MT.DGN

USER: tvonbehren
DATE PLOTTED: January 2, 2012

E-SHEET NAME:

MicroStation v8.11.7.443

COUNTY OF	ITEM NO.	SHEET NO.
CAMPBELL	6-2021.00	R245

NOTE:

Close GA Ramps H And K And MP Ramps A And D And Extend The Temporary Barrier Wall Through The Slip Ramp Area To Construct The Ramp And The Portion Of Roadway In That Area. See The Maintenance Of Traffic Notes For Ramp Closure Time. See The Maintenance Of Traffic Typical Sections For Location Of Temporary Barrier Wall.

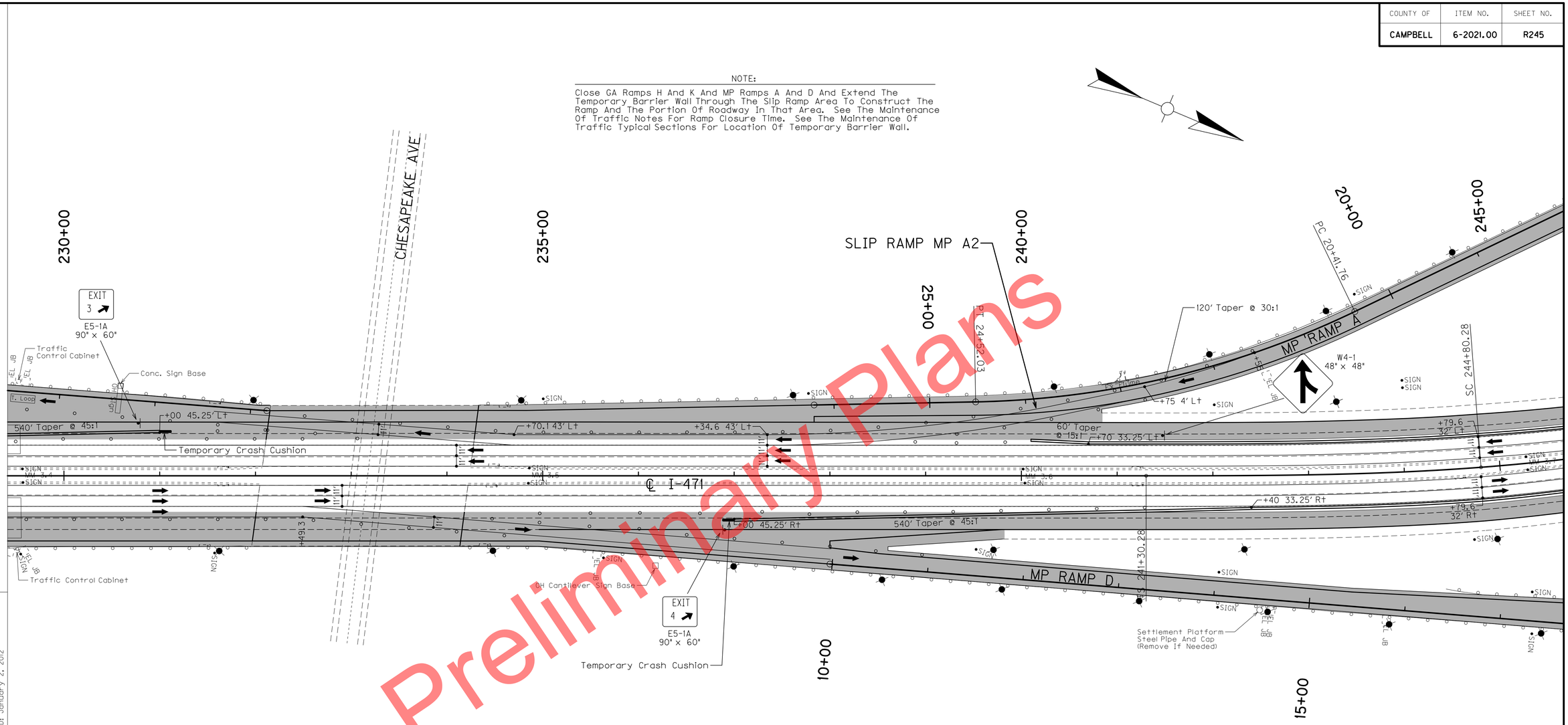

Preliminary Plans

LEGEND

- Temporary Concrete Barrier Wall
- Channelizing Device
- Construction This Phase

SIGNS WILL BE COVERED, REMOVED, STORED, OR PLACED AS DIRECTED BY THE ENGINEER.

SCALE: 1"= 50'

MAINTENANCE OF TRAFFIC PLAN
PHASE 3
I-471 STA 230+00 TO STA 245+00

FILE NAME: P:\CIVIL\471\6-2021.00\CONTRACT PLANS AND PROPOSAL\CONTRACT PLAN SET\ROADWAY\R245OMT.DGN
USER: tvonbehren
DATE PLOTTED: January 2, 2012
E-SHEET NAME:
MicroStation v8.11.7.443

COUNTY OF	ITEM NO.	SHEET NO.
CAMPBELL	6-2021.00	R246

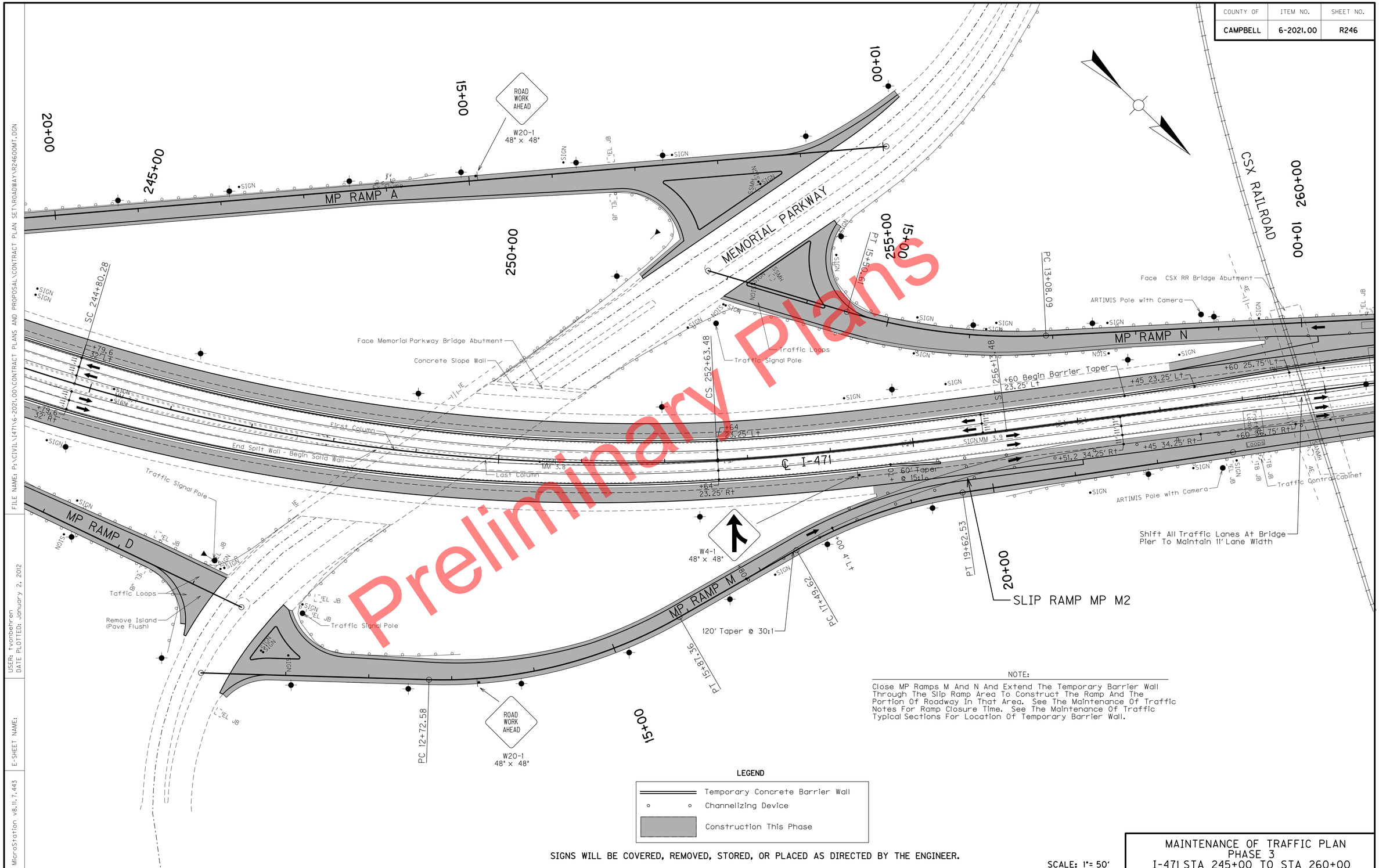

Preliminary Plans

NOTE:

Close MP Ramps M And N And Extend The Temporary Barrier Wall Through The Slip Ramp Area To Construct The Ramp And The Portion Of Roadway In That Area. See The Maintenance Of Traffic Notes For Ramp Closure Time. See The Maintenance Of Traffic Typical Sections For Location Of Temporary Barrier Wall.

LEGEND

- Temporary Concrete Barrier Wall
- Channelizing Device
- Construction This Phase

SIGNS WILL BE COVERED, REMOVED, STORED, OR PLACED AS DIRECTED BY THE ENGINEER.

SCALE: 1"= 50'

MAINTENANCE OF TRAFFIC PLAN
PHASE 3
I-471 STA 245+00 TO STA 260+00

FILE NAME: P:\CIVIL\I471\6-2021.00\CONTRACT PLANS AND PROPOSAL\CONTRACT PLAN SET\ROADWAY\R246OOMT.DGN

USER: tvonbehren
DATE PLOTTED: January 2, 2012

E-SHEET NAME:

MicroStation v8.11.7.443

COUNTY OF	ITEM NO.	SHEET NO.
CAMPBELL	6-2021.00	R247

Preliminary Plans

10+00 260+00 265+00 270+00 275+00

Traffic Control Cabinet

540' Barrier Taper @ 45:1

EXIT 4
E5-1A
90" x 60"

Temporary Crash Cushion

MP RAMP N

+02 25.75' Lt

+10 23.5' Lt

+00 End Barrier Taper
34.5' Lt

Loops

SIGN MM 4.0

+02 36.75' Rt

+10 34.5' Rt

SIGN

Deck Drain (Typ)

+7.2 34.5' Lt

Deck Drain (Typ)

SIGN MM 4.1

℄ I-471

SIGN MM 4.2

TS 270+60.20

W4-2
48" x 48"

SC 273+60.20

+90 23.5' Rt

540' Taper @ 45:1

+50 38.5' Rt

Deck Drain (Typ)

Temporary Crash Cushion

Crash Cushion

KY 8 Ramp L

EXIT 5
E5-1A
90" x 60"

PC 13+25.86

CSX RAILROAD

6TH STREET

15+00

NOTE:

Close MP Ramp N And KY 8 Ramp L And Extend The Temporary Barrier Wall Through The Slip Ramp Area To Complete Construction In That Area And Perform All Work On The Ramp. See The Maintenance Of Traffic Notes For Ramp Closure Time. See The Maintenance Of Traffic Typical Sections For Location Of Temporary Barrier Wall.

LEGEND

- Temporary Concrete Barrier Wall
- Channelizing Device
- Construction This Phase

SIGNS WILL BE COVERED, REMOVED, STORED, OR PLACED AS DIRECTED BY THE ENGINEER.

SCALE: 1"= 50'

MAINTENANCE OF TRAFFIC PLAN
PHASE 3
I-471 STA 260+00 TO STA 275+00

FILE NAME: P:\CIVIL\471\6-2021.00\CONTRACT PLANS AND PROPOSAL\CONTRACT PLAN SET\ROADWAY\R247TOMT.DGN
USER: tvonbehren
DATE PLOTTED: January 2, 2012
E-SHEET NAME:
MicroStation v8.11.7.443

COUNTY OF	ITEM NO.	SHEET NO.
CAMPBELL	6-2021.00	R248

NOTE:

Close KY 8 Ramp K And Extend The Temporary Barrier Wall Through The Slip Ramp Area To Construct The Ramp Portion Of Roadway In That Area. See The Maintenance Of Traffic Notes For Ramp Closure Time. See The Maintenance Of Traffic Typical Sections For Location Of Temporary Barrier Wall.

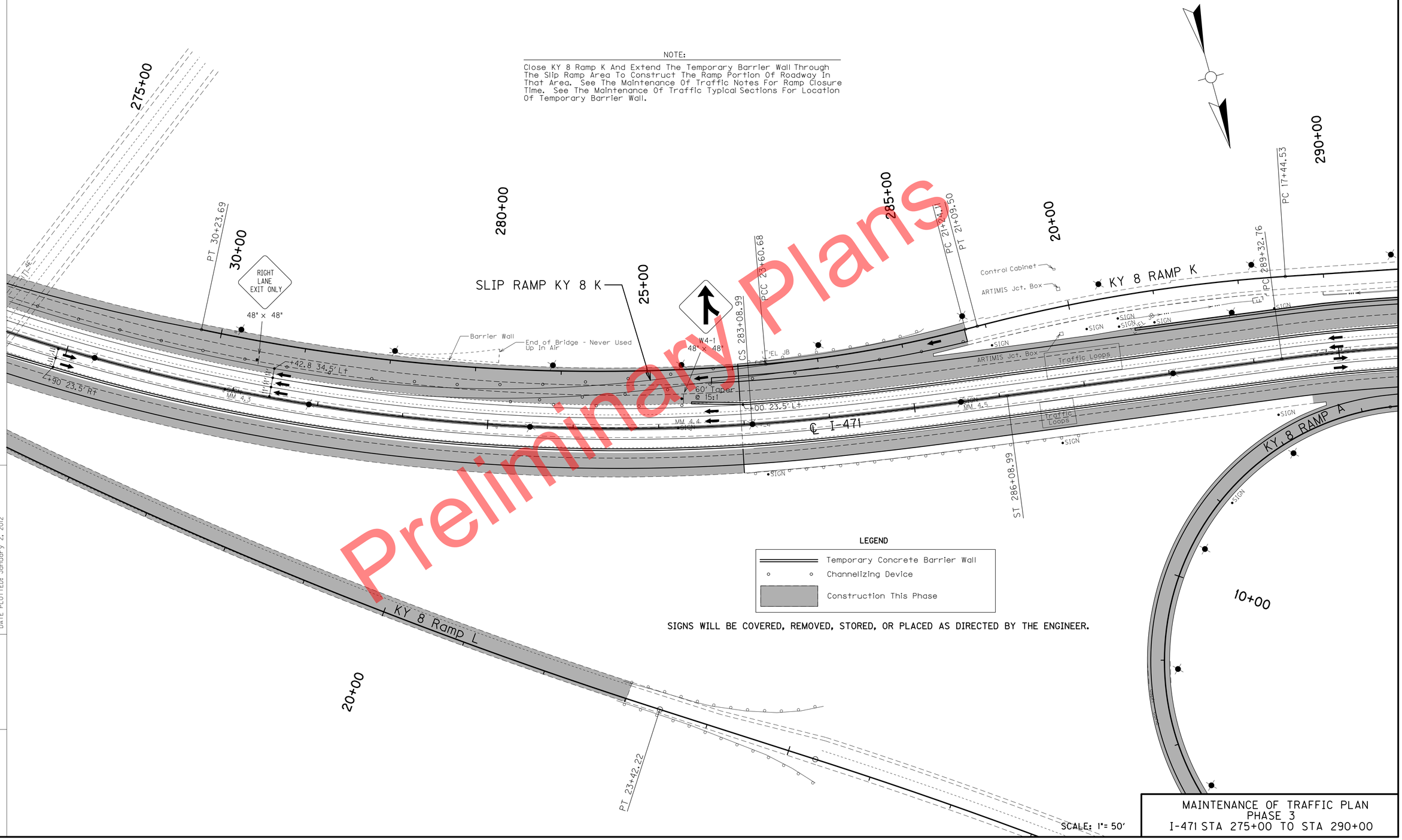

LEGEND

- Temporary Concrete Barrier Wall
- Channelizing Device
- Construction This Phase

SIGNS WILL BE COVERED, REMOVED, STORED, OR PLACED AS DIRECTED BY THE ENGINEER.

SCALE: 1"= 50'

MAINTENANCE OF TRAFFIC PLAN
PHASE 3
I-471 STA 275+00 TO STA 290+00

Preliminary Plans

MicroStation v8.11.7.443
E-SHEET NAME:
USER: tvanbehren
DATE PLOTTED: January 2, 2012
FILE NAME: P:\CIVIL\471\6-2021.00\CONTRACT PLANS AND PROPOSAL\CONTRACT PLAN SET\ROADWAY\R248OMT.DGN

COUNTY OF	ITEM NO.	SHEET NO.
CAMPBELL	6-2021.00	R249

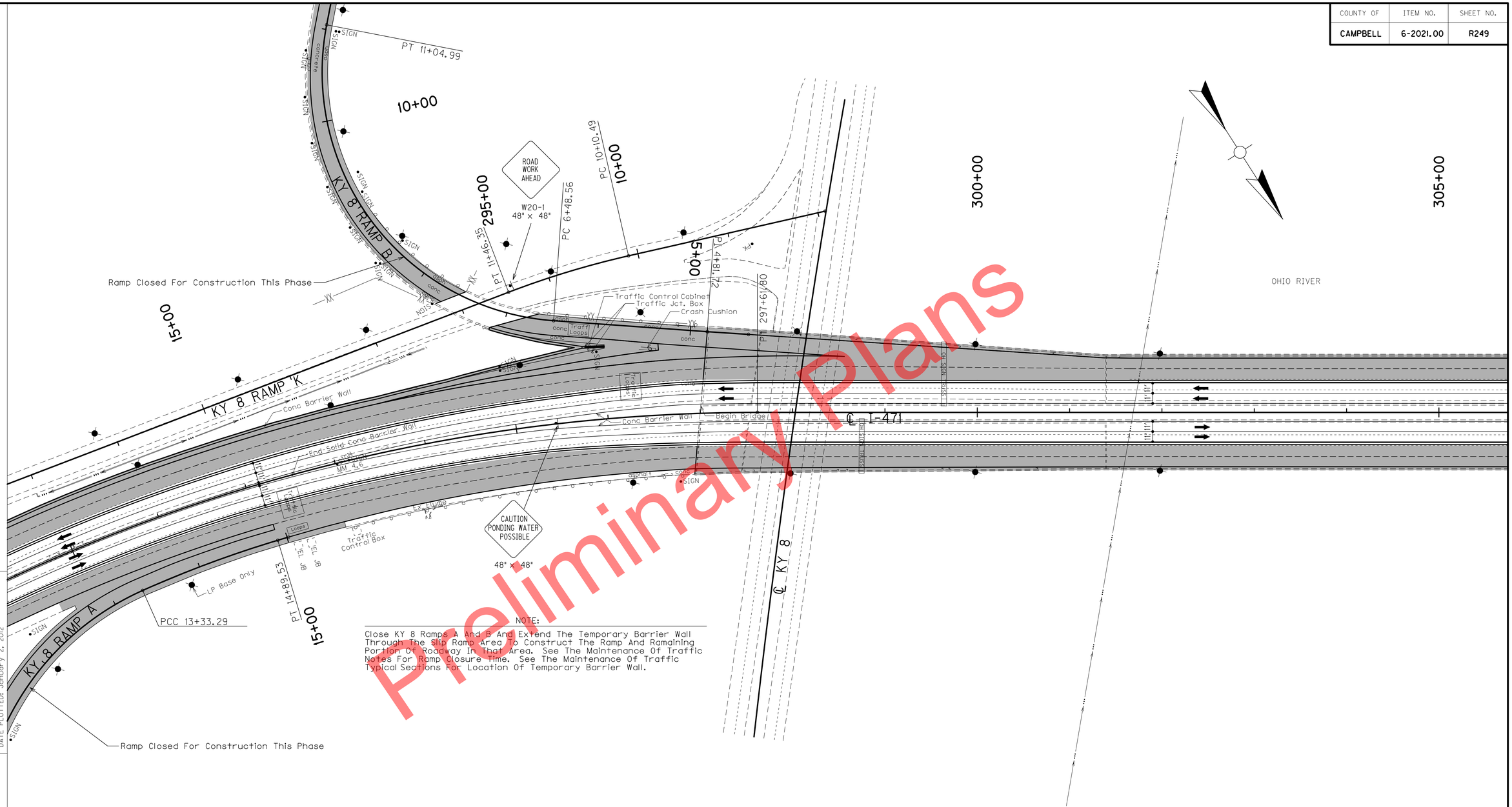

NOTE:

Close KY 8 Ramps A And B And Extend The Temporary Barrier Wall Through The Slip Ramp Area To Construct The Ramp And Remaining Portion Of Roadway In That Area. See The Maintenance Of Traffic Notes For Ramp Closure Time. See The Maintenance Of Traffic Typical Sections For Location Of Temporary Barrier Wall.

Preliminary Plans

LEGEND

- Temporary Concrete Barrier Wall
- Channelizing Device
- Construction This Phase

SIGNS WILL BE COVERED, REMOVED, STORED, OR PLACED AS DIRECTED BY THE ENGINEER.

SCALE: 1"= 50'

MAINTENANCE OF TRAFFIC PLAN
PHASE 3
I-471 STA 290+00 TO STA 305+00

FILE NAME: P:\CIVIL\147\N6-2021.00\CONTRACT PLANS AND PROPOSAL\CONTRACT PLAN SET\ROADWAY\R249OMT.DGN
USER: tvonbehren
DATE PLOTTED: January 2, 2012
E-SHEET NAME:
MicroStation v8.11.7.443

COUNTY OF	ITEM NO.	SHEET NO.
CAMPBELL	6-2021.00	R250

REMOVAL OF PAVEMENT MARKINGS AND RAISED PAVEMENT MARKERS

The Method Of Line Removal In Ohio Should Comply With ODOT Specification 614.11 Work Zone Pavement Markings Section G Conflicting Markings.

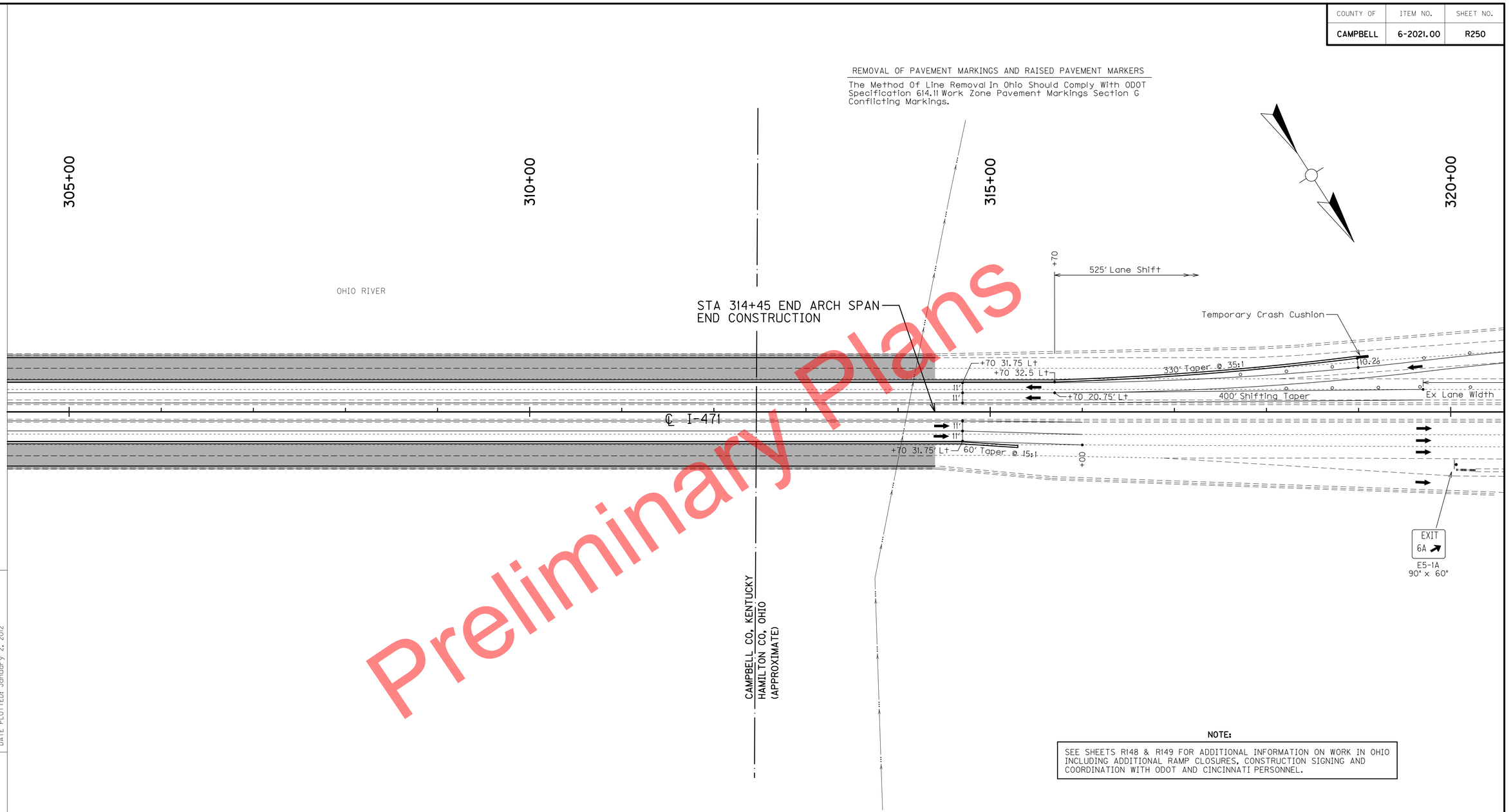

Preliminary Plans

NOTE:

SEE SHEETS R148 & R149 FOR ADDITIONAL INFORMATION ON WORK IN OHIO INCLUDING ADDITIONAL RAMP CLOSURES, CONSTRUCTION SIGNING AND COORDINATION WITH ODOT AND CINCINNATI PERSONNEL.

LEGEND

- Temporary Concrete Barrier Wall
- Channelizing Device
- Construction This Phase

SIGNS WILL BE COVERED, REMOVED, STORED, OR PLACED AS DIRECTED BY THE ENGINEER.

SCALE: 1"= 50'

MAINTENANCE OF TRAFFIC PLAN
PHASE 3
I-471 STA 305+00 TO OHIO SIGNING

FILE NAME: P:\CIVIL\147\N6-2021.00\CONTRACT PLANS AND PROPOSAL\CONTRACT PLAN SET\ROADWAY\R250OMT.DGN
USER: tvonbehren
DATE PLOTTED: January 2, 2012
E-SHEET NAME:
MicroStation v8.11.7.443

COUNTY OF	ITEM NO.	SHEET NO.
CAMPBELL	6-2021.00	R251

LEGEND

═══	Temporary Concrete Barrier Wall
○ ○	Channelizing Device
▭	Construction This Phase

SIGNS WILL BE COVERED, REMOVED, STORED, OR PLACED AS DIRECTED BY THE ENGINEER.

NOTE:

SEE SHEETS R148 & R149 FOR ADDITIONAL INFORMATION ON WORK IN OHIO INCLUDING ADDITIONAL RAMP CLOSURES, CONSTRUCTION SIGNING AND COORDINATION WITH ODOT AND CINCINNATI PERSONNEL.

REMOVAL OF PAVEMENT MARKINGS AND RAISED PAVEMENT MARKERS

The Method Of Line Removal In Ohio Should Comply With ODOT Specification 614.11 Work Zone Pavement Markings Section G Conflicting Markings.

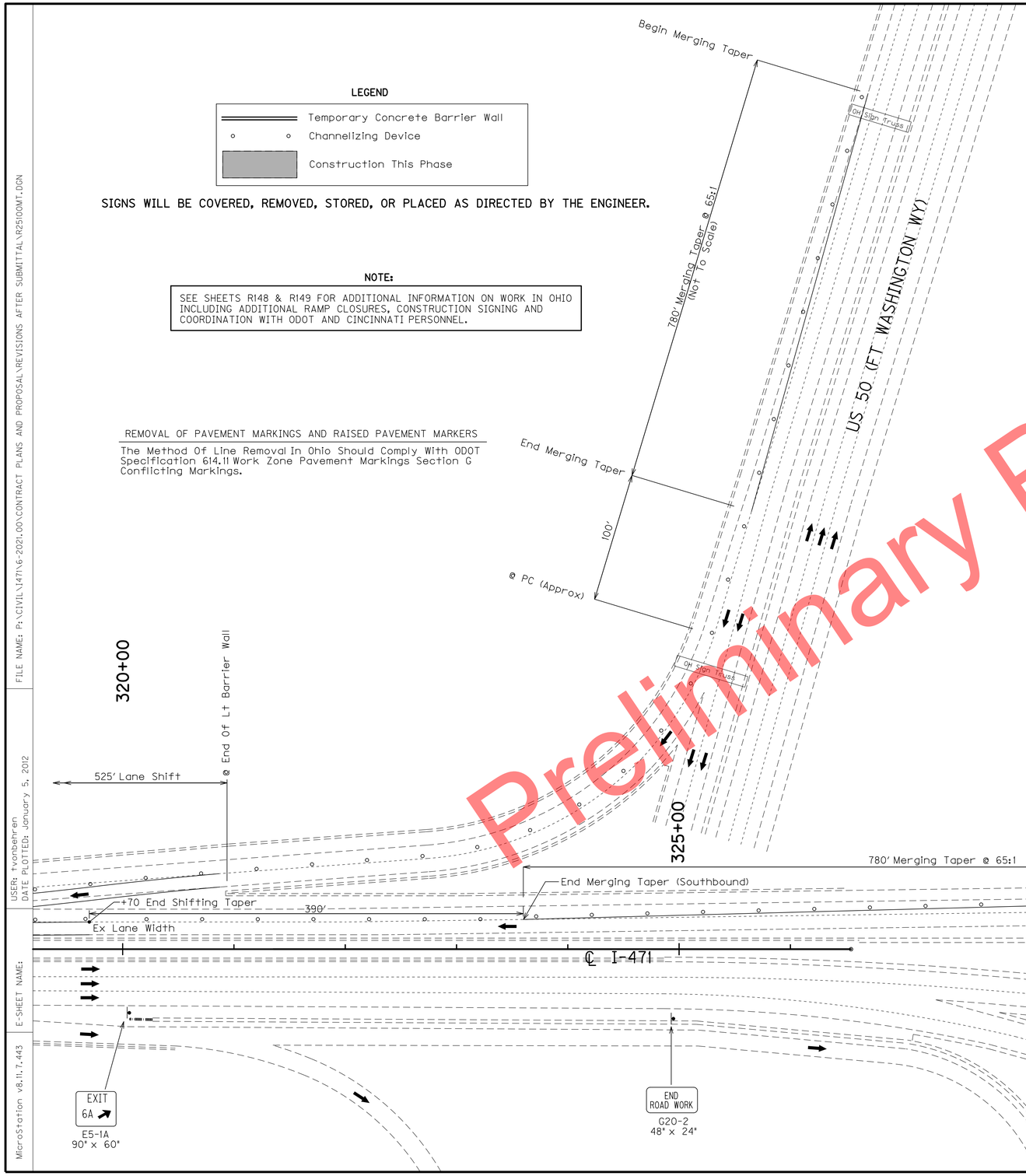

I-471 SOUTHBOUND AND US 50 EASTBOUND LANE CLOSURE SIGNING

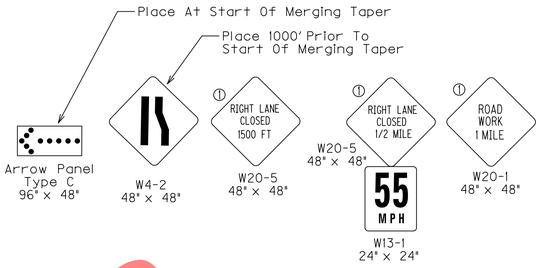

① Place Sign At Distance Indicated On The Sign Relative To The Nearest Point Of Construction

Construct Lane Drops Per The Standard Drawings And The M.U.T.C.D.

Place Portable Changeable Message Sign On US 50 And I-471 SB At 1 Mile Prior To Begin Construction Or As Directed By The Engineer.

CONTINUOUS PROJECT SIGNING THIS PHASE ②

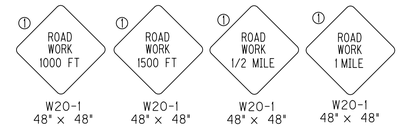

② These Signs Are To Be Installed On I-471 SB And US 50 EB Prior To Beginning Phase 3 Construction And Are To Remain In Place Throughout The Phase. Signs Are Not To Conflict With Lane Closure Signing When Lane Closures Are In Place.

Preliminary Plans

SCALE: 1"= 50'

MAINTENANCE OF TRAFFIC PLAN
PHASE 3
I-471 OHIO SIGNING

FILE NAME: P:\CIVIL\471\6-2021.00\CONTRACT PLANS AND PROPOSAL\REVISIONS AFTER SUBMITTAL\R251OMT.DGN
USER: tvonbehren
DATE PLOTTED: January 5, 2012
E-SHEET NAME:
MicroStation v8.11.7.443

COUNTY OF	ITEM NO.	SHEET NO.
CAMPBELL	6-2021.00	R252

FILE NAME: P:\CIVIL\147\N6-2021.00\CONTRACT PLANS AND PROPOSAL\REVISIONS AFTER SUBMITTAL\R25200MT.DGN
USER: jnapier
DATE PLOTTED: January 5, 2012
E-SHEET NAME:
MicroStation v8.11.7.443

LEGEND

- Temporary Concrete Barrier Wall
- Channelizing Device
- Construction This Phase

SIGNS WILL BE COVERED, REMOVED, STORED, OR PLACED AS DIRECTED BY THE ENGINEER.

THIS SHEET FOR INFORMATION ONLY

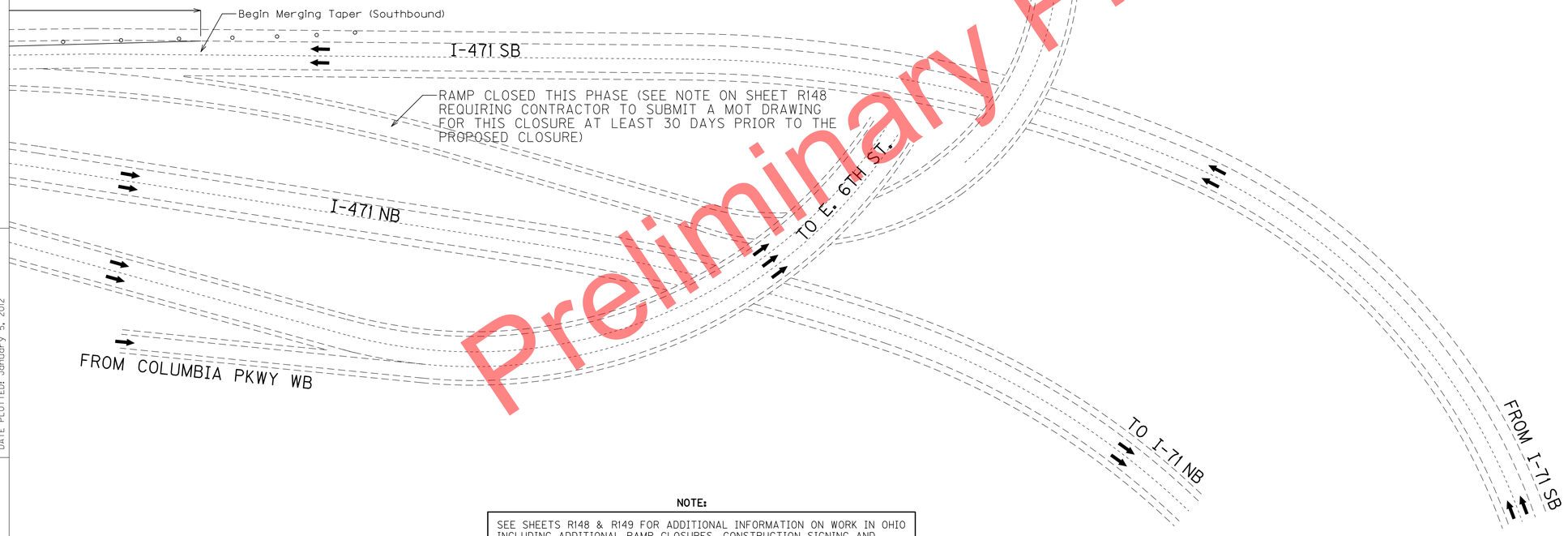

Preliminary Plans

NOTE:

SEE SHEETS R148 & R149 FOR ADDITIONAL INFORMATION ON WORK IN OHIO INCLUDING ADDITIONAL RAMP CLOSURES, CONSTRUCTION SIGNING AND COORDINATION WITH ODOT AND CINCINNATI PERSONNEL.

SCALE: 1"= 50'

MAINTENANCE OF TRAFFIC PLAN
PHASE 3
I-471 OHIO SIGNING

COUNTY OF	ITEM NO.	SHEET NO.
CAMPBELL	6-2021.00	R253

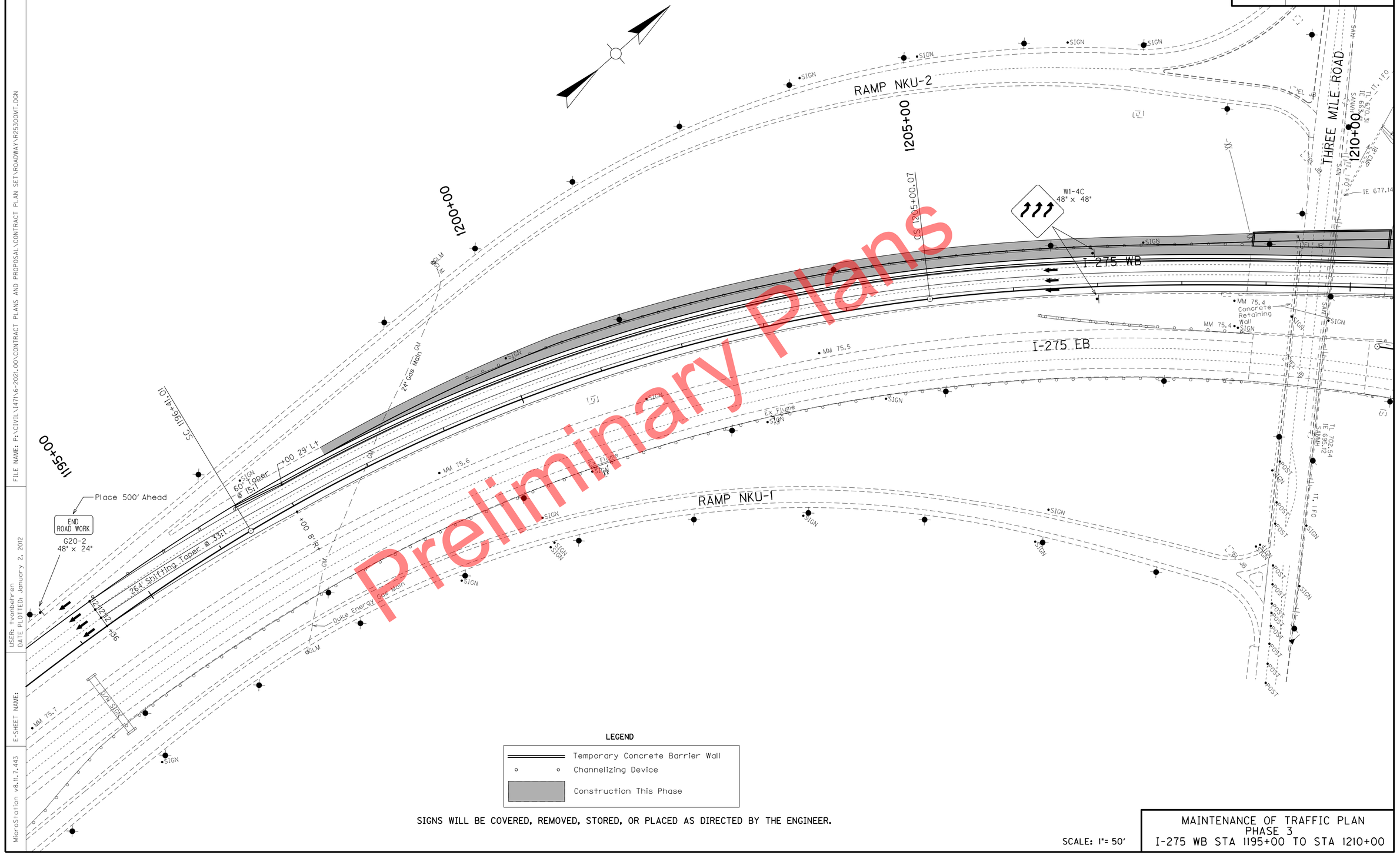

Preliminary Plans

LEGEND

- Temporary Concrete Barrier Wall
- Channelizing Device
- Construction This Phase

SIGNS WILL BE COVERED, REMOVED, STORED, OR PLACED AS DIRECTED BY THE ENGINEER.

SCALE: 1"= 50'

MAINTENANCE OF TRAFFIC PLAN
PHASE 3
I-275 WB STA 1195+00 TO STA 1210+00

FILE NAME: P:\CIVIL\147\N6-2021.00\CONTRACT PLANS AND PROPOSAL\CONTRACT PLAN SET\ROADWAY\R253OMT.DGN
USER: tvonbehren
DATE PLOTTED: January 2, 2012
E-SHEET NAME:
MicroStation v8.11.7.443

COUNTY OF	ITEM NO.	SHEET NO.
CAMPBELL	6-2021.00	R254

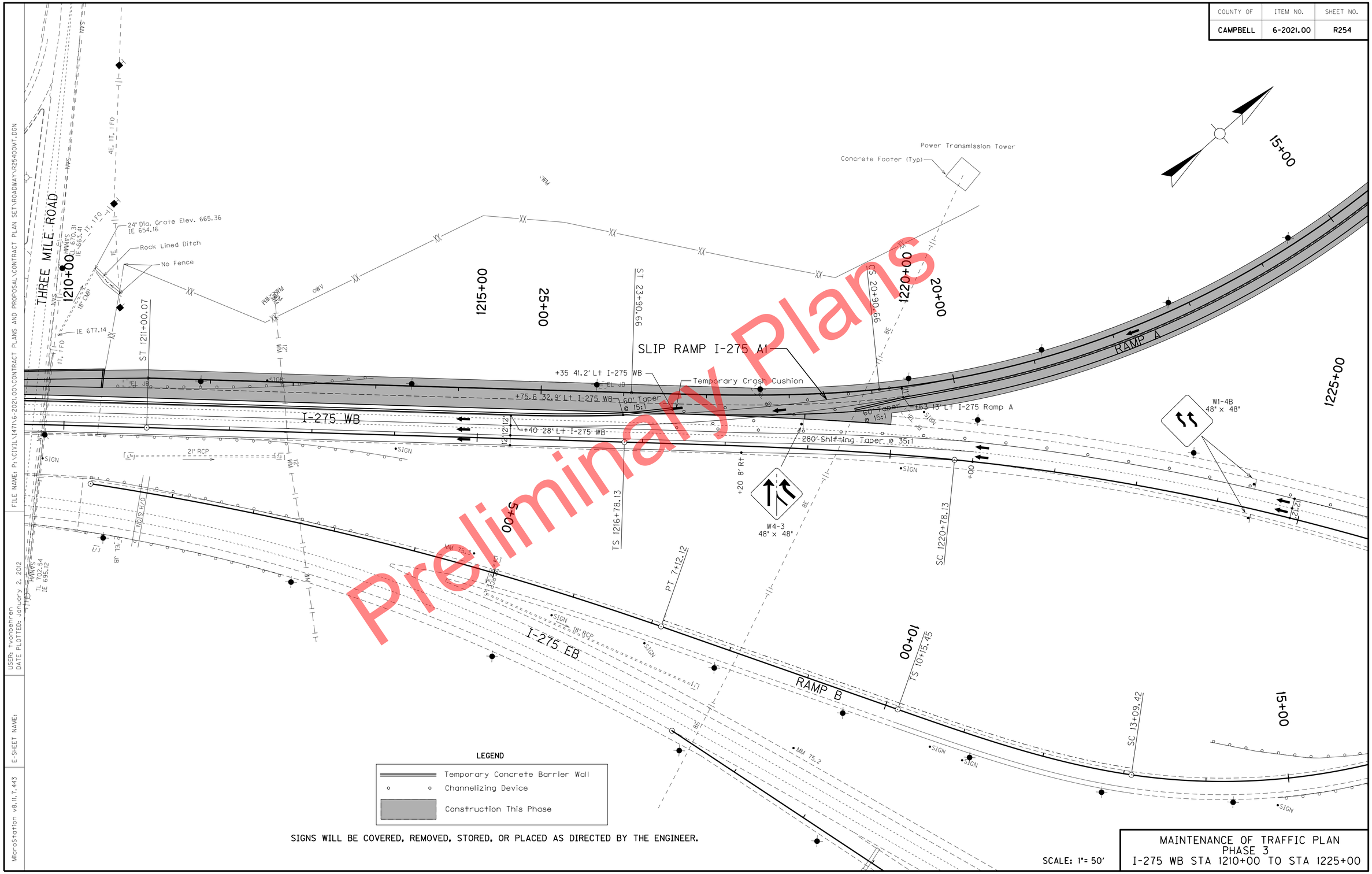

Preliminary Plans

LEGEND

- Temporary Concrete Barrier Wall
- Channelizing Device
- Construction This Phase

SIGNS WILL BE COVERED, REMOVED, STORED, OR PLACED AS DIRECTED BY THE ENGINEER.

SCALE: 1"= 50'

MAINTENANCE OF TRAFFIC PLAN
PHASE 3
I-275 WB STA 1210+00 TO STA 1225+00

FILE NAME: P:\CIVIL\1471\6-2021.00\CONTRACT PLANS AND PROPOSAL\CONTRACT PLAN SET\ROADWAY\R254OOMT.DGN

USER: tvonbehren
DATE PLOTTED: January 2, 2012

E-SHEET NAME:

MicroStation v8.11.7.443

COUNTY OF	ITEM NO.	SHEET NO.
CAMPBELL	6-2021.00	R255

Preliminary Plans

COMPLETE ALL REMAINING I-275 WB WIDENING WORK THIS PHASE

SLIP RAMP I-275 A2

THREE MILE ROAD

I-275 WB

I-275 EB

RAMP A

RAMP B

Power Transmission Tower

Concrete Footer (Typ)

24" Dia. Grate Elev. 665.36
IE 654.16

Rock Lined Ditch

No Fence

IE 677.14

ST 1211+00.07

1210+00

1215+00

25+00

ST 23+90.66

CS 20+90.66

1220+00

20+00

15+00

1225+00

Temporary Crash Cushion

+91 13.5' Lt I-275 Ramp A

+50 21.5' Lt I-275 Ramp A

60' Taper @ 15:1

+01.2 28' Lt

280' Shifting Taper @ 35:1

W1-4B
48" x 48"

+90 24' Lt Begin
Merging Taper

+20 8' Rt

W4-3
48" x 48"

TS 1216+78.13

SC 1220+78.13

PT 7+12.12

10+00

TS 10+15.45

SC 13+09.42

5+00

15+00

21" RCP

18" RCP

NDIS H/O

SIGN

MM 75.3

MM 75.2

LEGEND

- Temporary Concrete Barrier Wall
- Channelizing Device
- Construction This Phase

SIGNS WILL BE COVERED, REMOVED, STORED, OR PLACED AS DIRECTED BY THE ENGINEER.

SCALE: 1"= 50'

MAINTENANCE OF TRAFFIC PLAN
PHASE 3a
I-275 WB STA 1210+00 TO STA 1225+00

FILE NAME: P:\CIVIL\147IN6-2021.00\CONTRACT PLANS AND PROPOSAL\CONTRACT PLAN SET\ROADWAY\R255OMT.DGN
USER: tvonbehren
DATE PLOTTED: January 2, 2012
E-SHEET NAME:
MicroStation v8.11.7.443

COUNTY OF	ITEM NO.	SHEET NO.
CAMPBELL	6-2021.00	R256

LEGEND

- Temporary Concrete Barrier Wall
- Channelizing Device
- Construction This Phase

SIGNS WILL BE COVERED, REMOVED, STORED, OR PLACED AS DIRECTED BY THE ENGINEER.

Place Portable Changeable Message Sign At 1 Mile
Prior To Begin Construction Or As Directed By The Engineer

Place 1000' Prior To Start Of Merging Taper

W4-2 48" x 48"

① ROAD WORK 1000 FT — W20-1 48" x 48"

① ROAD WORK 1500 FT — W20-1 48" x 48"

① ROAD WORK 1/2 MILE — W20-1 48" x 48"

① RIGHT LANE CLOSED 1/2 MILE — W20-5 48" x 48"

SPEED LIMIT 55 — R2-1 24" x 30"

① ROAD WORK 1 MILE — W20-1 48" x 48"

① Place Sign At Distance Indicated On The Sign Relative To The Nearest Point Of Construction

Construct Lane Drops Per The Standard Drawings And The M.U.T.C.D.

Arrow Panel Type C 96" x 48"

+90 24' Lt Begin Merging Taper

780' Merging Taper @ 65:1

+70 36' Lt End Merging Taper

SC 24+20.28

CS 23+15.65

CS 8+11.25

SC 19+98.55

PCC 17+65.85

PC 17+01.36

PT 16+76.78

CS 16+87.04

CS 58+33.59

CS 1239+81.35

I-275 WB

I-471 SB

I-471 NB

RAMP B

RAMP F

RAMP E

MM 74.9

65+00 | 1225+00 | 1230+00 | 10+00 | 20+00 | 60+00 | 15+00 | 1235+00 | 1240+00

Preliminary Plans

SCALE: 1"= 50'

MAINTENANCE OF TRAFFIC PLAN
PHASE 3
I-275 WB STA 1225+00 TO STA 1240+00

MicroStation v8.11.7.443 | E-SHEET NAME: | USER: tvonbehren DATE PLOTTED: January 2, 2012 | FILE NAME: P:\CIVIL\147\6-2021.00\CONTRACT PLANS AND PROPOSAL\CONTRACT PLAN SET\ROADWAY\R256GOMT.DGN

COUNTY OF	ITEM NO.	SHEET NO.
CAMPBELL	6-2021.00	R257

NOTE:
Close Ramp A And Extend The Temporary Barrier Wall Through The Slip Ramp Area To Construct The Portion Of Roadway In That Area. See The Maintenance Of Traffic Notes For Ramp Closure Time. See The Maintenance Of Traffic Typical Sections For Location Of Temporary Barrier Wall.

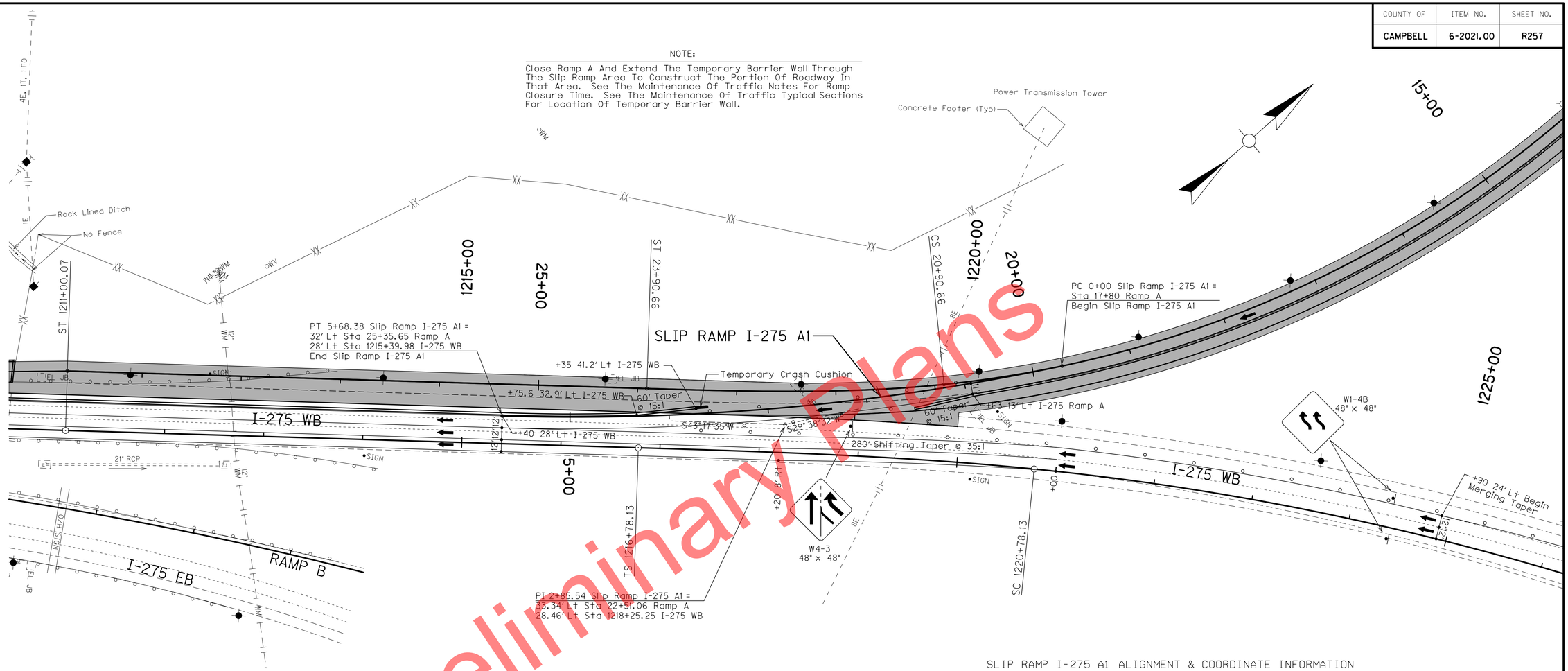

SLIP RAMP I-275 A1
P.I. 2+85.54
Δ = 13°39'03" Rt.
C = 2°24'06"
T = 285.54'
L = 568.38'
R = 2385'
E = 17.03'
e = MATCH
Runoff = EXIST
Runout = PVMT

SLIP RAMP I-275 A1 ALIGNMENT & COORDINATE INFORMATION

	STATION	NORTHING	EASTING
ELEMENT:	CIRCULAR		
PC	0+00.0000	4271211.4689	5286173.2726
PI	2+85.5402	4270963.2972	5286032.0494
CC		4272391.3448	5284099.8744
PT	5+68.3763	4270755.4653	5285836.2457
RADIUS:		2385.6000	
DELTA:		13°39'03.21"	RIGHT
DEGREE OF CURVATURE(ARC):		2°24'06.24"	
LENGTH:		568.3763	
TANGENT:		285.5402	
CHORD:		567.0330	
MIDDLE ORDINATE:		16.9072	
EXTERNAL:		17.0278	
TANGENT DIRECTION:		S 29°38'32.00"	W
RADIAL DIRECTION:		N 60°21'28.00"	W
CHORD DIRECTION:		S 36°28'03.60"	W
RADIAL DIRECTION:		N 46°42'24.80"	W
TANGENT DIRECTION:		S 43°17'35.20"	W

LEGEND
- Temporary Concrete Barrier Wall
- Channelizing Device
- Construction This Phase

SIGNS WILL BE COVERED, REMOVED, STORED, OR PLACED AS DIRECTED BY THE ENGINEER.

SCALE: 1"= 50'

MAINTENANCE OF TRAFFIC PLAN
PHASE 3
SLIP RAMP I-275 A1

Preliminary Plans

FILE NAME: P:\CIVIL\147\N6-2021.00\CONTRACT PLANS AND PROPOSAL\CONTRACT PLAN SET\ROADWAY\R257TOMT.DGN
USER: tvonbehren
DATE PLOTTED: January 2, 2012
E-SHEET NAME:
MicroStation v8.11.7.443

COUNTY OF	ITEM NO.	SHEET NO.
CAMPBELL	6-2021.00	R258

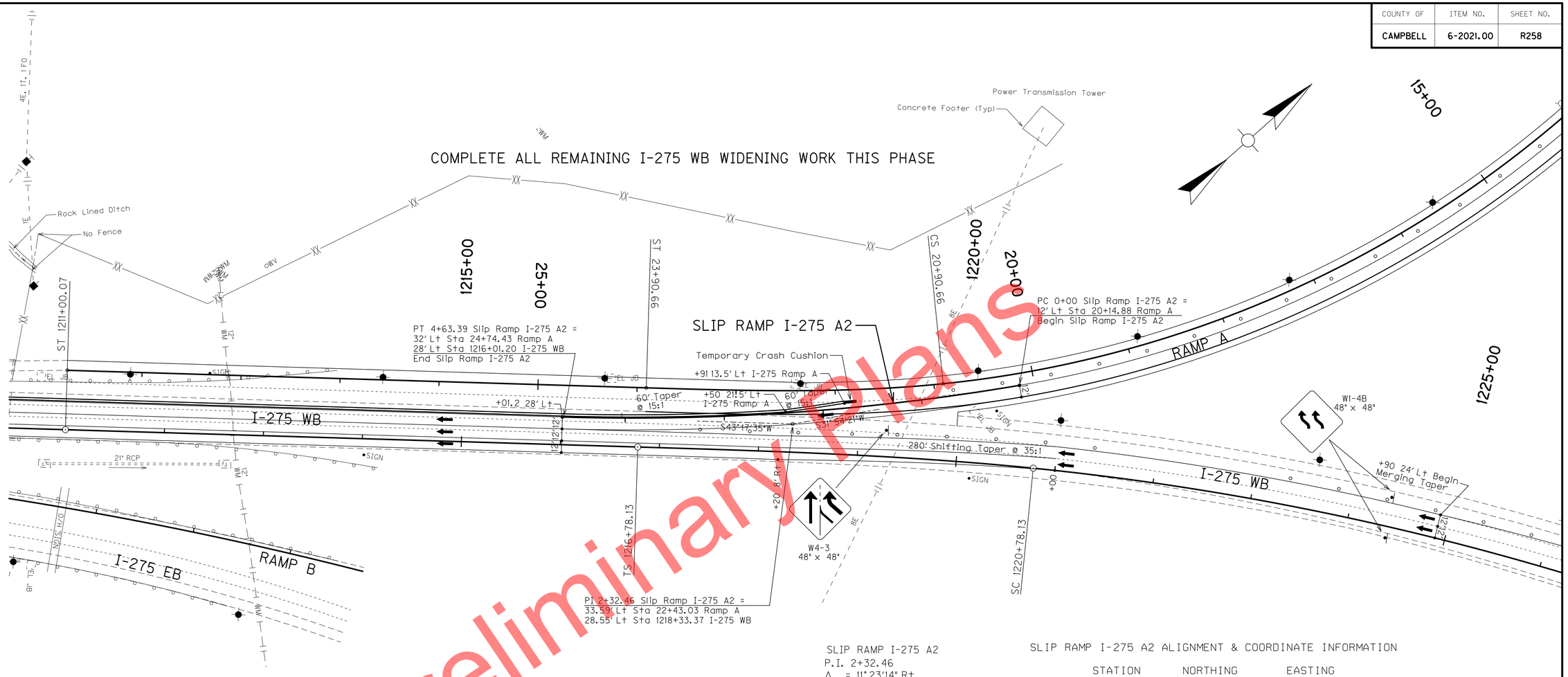

Preliminary Plans

SLIP RAMP I-275 A2
P.I. 2+32.46
Δ = 11°23'14" Rt.
C = 2°27'26"
T = 232.46'
L = 463.39'
R = 2331.61'
E = 11.56'
e = MATCH
Runoff = EXIST
Runout = PVMT

SLIP RAMP I-275 A2 ALIGNMENT & COORDINATE INFORMATION

	STATION	NORTHING	EASTING
	ELEMENT:	CIRCULAR	
PC	0+00.0000	427116 6.5671	528616 0.4972
PI	2+32.4626	4270969.2256	5286037.6347
CC		4272398.881 0	528418 1.1561
PT	4+63.3938	4270800.0265	5285878.2279
	RADIUS:	2331.6065	
	DELTA:	11°23'13.98"	RIGHT
DEGREE OF CURVATURE(ARC):		2°27'26.47"	
	LENGTH:	463.3938	
	TANGENT:	232.4626	
	CHORD:	462.6315	
	MIDDLE ORDINATE:	11.5026	
	EXTERNAL:	11.5597	
TANGENT DIRECTION:		S 31°54'21.22"	W
RADIAL DIRECTION:		N 58°05'38.78"	W
CHORD DIRECTION:		S 37°35'58.21"	W
RADIAL DIRECTION:		N 46°42'24.80"	W
TANGENT DIRECTION:		S 43°17'35.20"	W

LEGEND

- Temporary Concrete Barrier Wall
- Channelizing Device
- Construction This Phase

SIGNS WILL BE COVERED, REMOVED, STORED, OR PLACED AS DIRECTED BY THE ENGINEER.

SCALE: 1"= 50'

MAINTENANCE OF TRAFFIC PLAN
PHASE 3A
SLIP RAMP I-275 A2

FILE NAME: P:\CIVIL\147\N\6-2021.00\CONTRACT PLANS AND PROPOSAL\CONTRACT PLAN SET\ROADWAY\R258OMT.DGN
USER: tvonbehren
DATE PLOTTED: January 2, 2012
E-SHEET NAME:
MicroStation v8.11.7.443

COUNTY OF	ITEM NO.	SHEET NO.
CAMPBELL	6-2021.00	R259

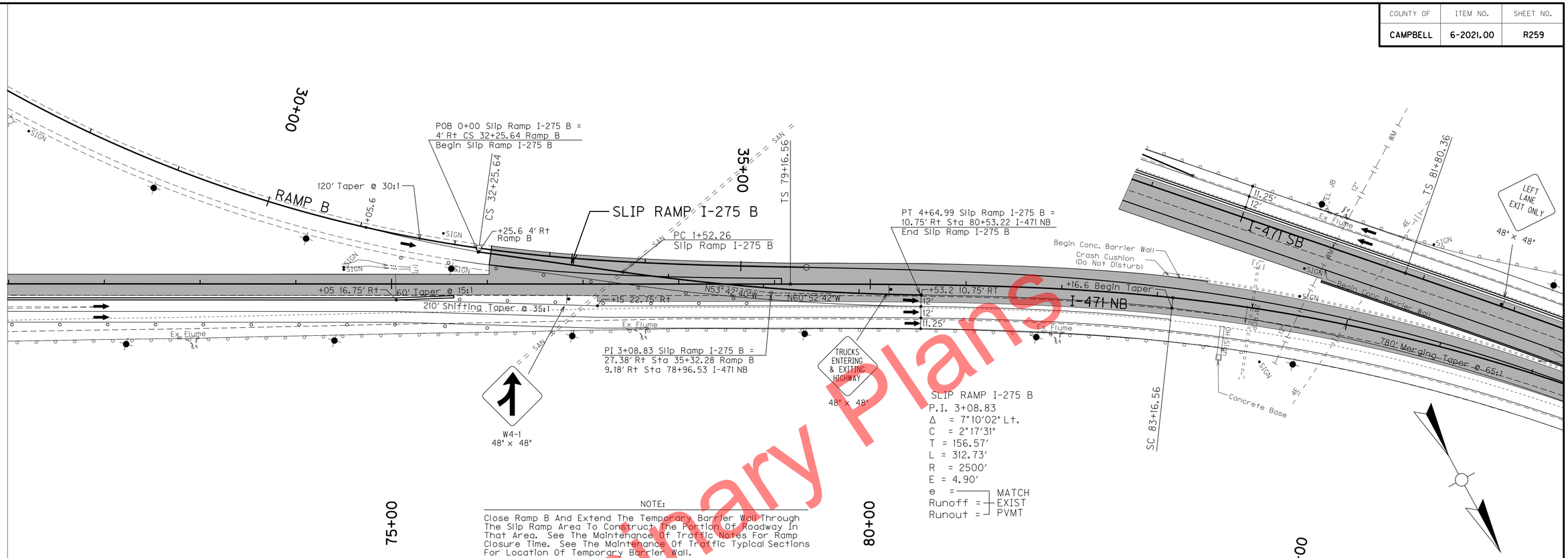

NOTE:

Close Ramp B And Extend The Temporary Barrier Wall Through The Slip Ramp Area To Construct The Portion Of Roadway In That Area. See The Maintenance Of Traffic Notes For Ramp Closure Time. See The Maintenance Of Traffic Typical Sections For Location Of Temporary Barrier Wall.

SLIP RAMP I-275 B
P.I. 3+08.83
Δ = 7°10'02" Lt.
C = 2°17'31"
T = 156.57'
L = 312.73'
R = 2500'
E = 4.90'
e = MATCH
Runoff = EXIST
Runout = PVMT

SLIP RAMP I-275 B ALIGNMENT & COORDINATE INFORMATION

	STATION	NORTHING	EASTING
	ELEMENT: LINEAR		
POB	0+00.0000	4272682.0238	5286385.9072
PC	1+52.2598	4272772.1398	5286263.1792
TANGENT DIRECTION:		N 53°42'40.00" W	
TANGENT LENGTH:		152.2598	
	ELEMENT: CIRCULAR		
PC	1+52.2598	4272772.1398	5286263.1792
PI	3+08.8308	4272864.8074	5286136.9762
CC		4270757.0321	5284783.5370
PT	4+64.9934	4272941.0049	5286000.1975
RADIUS:		2500.0000	
DELTA:		7°10'02.38" LEFT	
DEGREE OF CURVATURE(ARC):		2°17'30.59"	
LENGTH:		312.7336	
TANGENT:		156.5710	
CHORD:		312.5297	
MIDDLE ORDINATE:		4.8885	
EXTERNAL:		4.8981	
TANGENT DIRECTION:		N 53°42'40.00" W	
RADIAL DIRECTION:		N 36°17'20.00" E	
CHORD DIRECTION:		N 57°17'41.19" W	
RADIAL DIRECTION:		N 29°07'17.63" E	
TANGENT DIRECTION:		N 60°52'42.37" W	

LEGEND

- Temporary Concrete Barrier Wall
- Channelizing Device
- Construction This Phase

SIGNS WILL BE COVERED, REMOVED, STORED, OR PLACED AS DIRECTED BY THE ENGINEER.

Preliminary Plans

SCALE: 1"= 50'

MAINTENANCE OF TRAFFIC PLAN
PHASE 2
SLIP RAMP I-275 B

MicroStation v8.11.7.443
E-SHEET NAME:
USER: tvonbehren
DATE PLOTTED: January 2, 2012
FILE NAME: P:\CIVIL\I471\6-2021.00\CONTRACT PLANS AND PROPOSAL\CONTRACT PLAN SET\ROADWAY\R259OMT.DGN

COUNTY OF	ITEM NO.	SHEET NO.
CAMPBELL	6-2021.00	R260

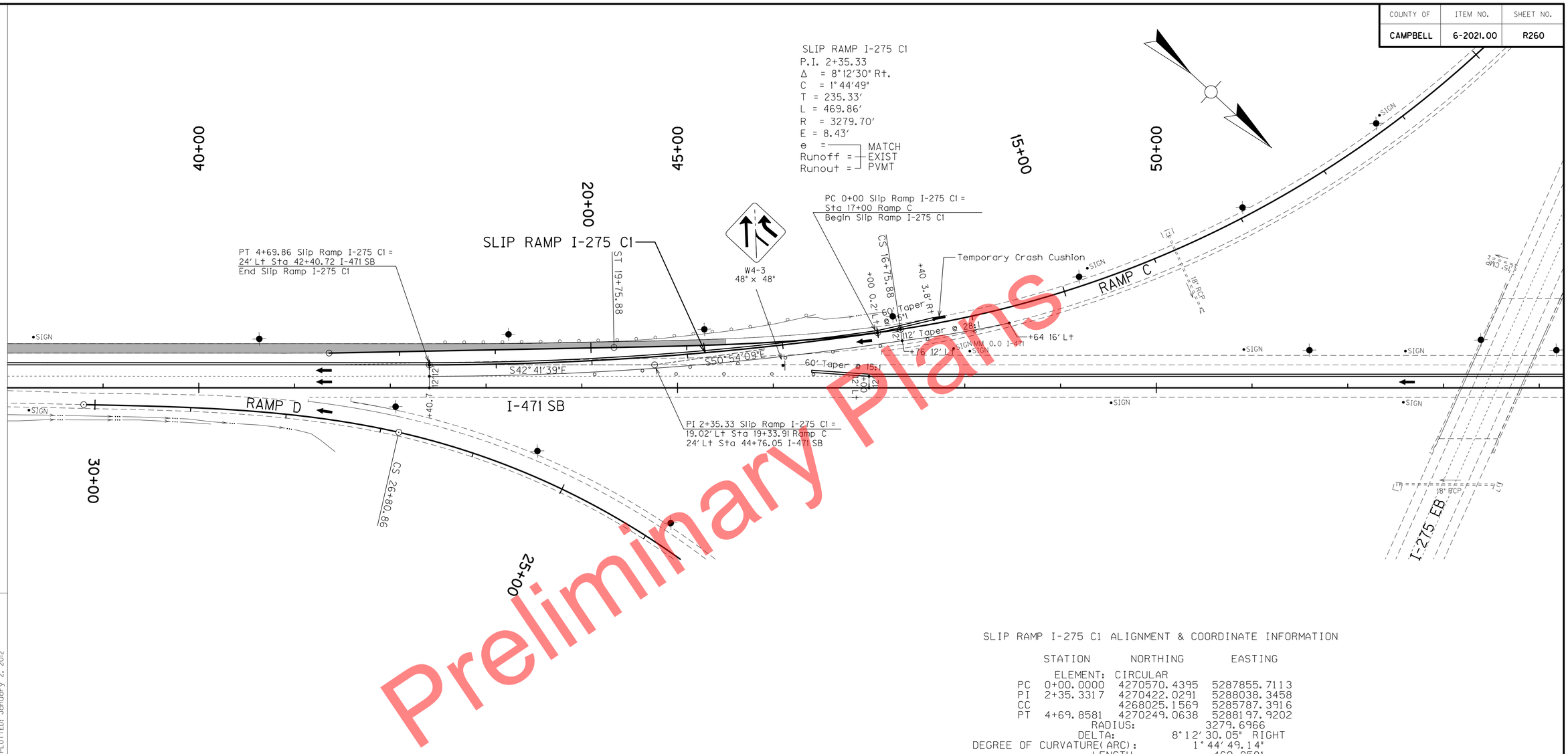

Preliminary Plans

SLIP RAMP I-275 C1 ALIGNMENT & COORDINATE INFORMATION

	STATION	NORTHING	EASTING
	ELEMENT: CIRCULAR		
PC	0+00.0000	4270570.4395	5287855.7113
PI	2+35.3317	4270422.0291	5288038.3458
CC		4268025.1569	5285787.3916
PT	4+69.8581	4270249.0638	5288197.9202
	RADIUS:	3279.6966	
	DELTA:	8°12'30.05"	RIGHT
DEGREE OF CURVATURE(ARC):		1°44'49.14"	
	LENGTH:	469.8581	
	TANGENT:	235.3317	
	CHORD:	469.4564	
	MIDDLE ORDINATE:	8.4105	
	EXTERNAL:	8.4322	
	TANGENT DIRECTION:	S 50°54'08.56"	E
	RADIAL DIRECTION:	S 39°05'51.44"	W
	CHORD DIRECTION:	S 46°47'53.54"	E
	RADIAL DIRECTION:	S 47°18'21.49"	W
	TANGENT DIRECTION:	S 42°41'38.51"	E

LEGEND

- Temporary Concrete Barrier Wall
- Channelizing Device
- Construction This Phase

SIGNS WILL BE COVERED, REMOVED, STORED, OR PLACED AS DIRECTED BY THE ENGINEER.

SCALE: 1"= 50'

MAINTENANCE OF TRAFFIC PLAN
PHASE 1
SLIP RAMP I-275 C1

MicroStation v8.11.7.443 | E-SHEET NAME: | USER: tvonbehren DATE PLOTTED: January 2, 2012 | FILE NAME: P:\CIVIL\147\N6-2021.00\CONTRACT PLANS AND PROPOSAL\CONTRACT PLAN SET\ROADWAY\R26000MT.DGN

COUNTY OF	ITEM NO.	SHEET NO.
CAMPBELL	6-2021.00	R261

NOTE:
Close Ramp C And Extend The Temporary Barrier Wall Through The Slip Ramp Area To Construct The Portion Of Roadway In That Area. See The Maintenance Of Traffic Notes For Ramp Closure Time. See The Maintenance Of Traffic Typical Sections For Location Of Temporary Barrier Wall.

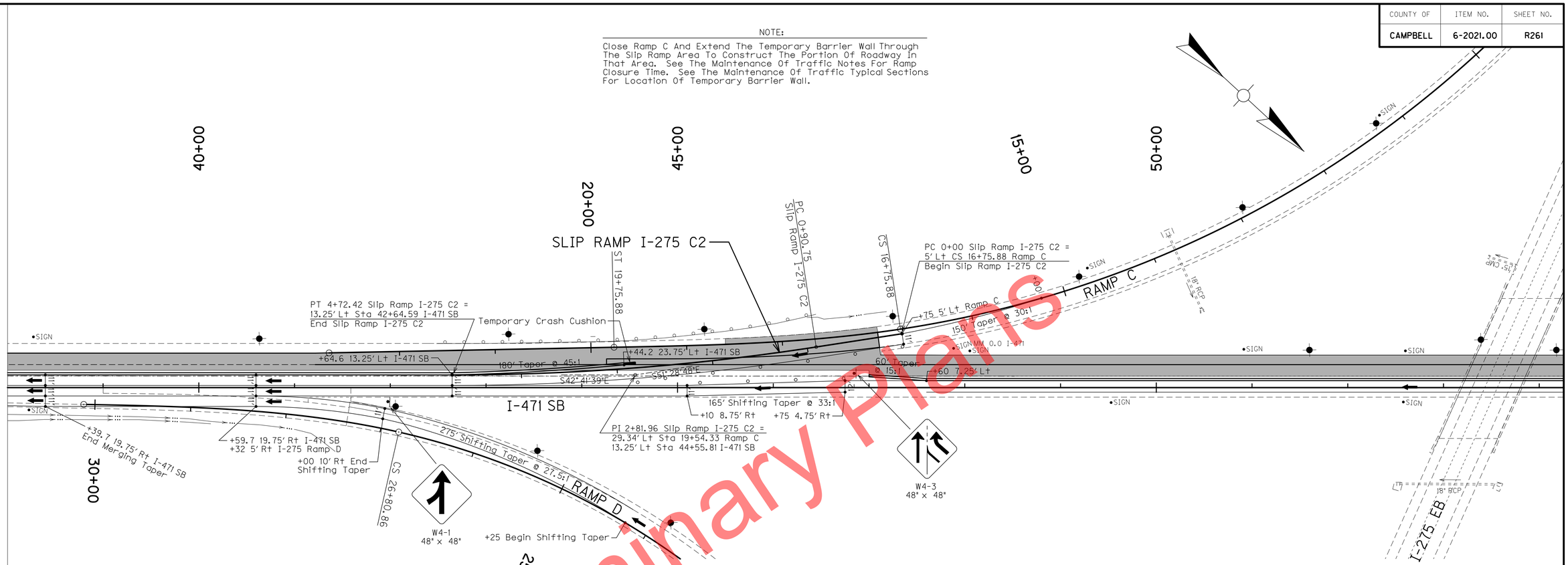

Preliminary Plans

SLIP RAMP I-275 C2
P.I. 2+81.96
Δ = 8° 47' 10" Rt.
C = 2° 18' 07"
T = 191.21'
L = 381.68'
R = 2489'
E = 7.33'
e = MATCH
Runoff = EXIST
Runout = PVMT

SLIP RAMP I-275 C2 ALIGNMENT & COORDINATE INFORMATION

	STATION	NORTHING	EASTING
	ELEMENT: LINEAR		
POB	0+00.0000	4270590.0400	5287839.3710
PC	0+90.7477	4270533.5235	5287910.3713
	TANGENT DIRECTION:	S 51° 28' 48.26" E	
	TANGENT LENGTH:	90.7477	
	ELEMENT: CIRCULAR		
PC	0+90.7477	4270533.5235	5287910.3713
PI	2+81.9608	4270414.4385	5288059.9748
CC		4268586.1508	5286360.2549
PT	4+72.4242	4270273.8997	5288189.6332
	RADIUS:	2489.0000	
	DELTA:	8° 47' 09.74" RIGHT	
	DEGREE OF CURVATURE(ARC):	2° 18' 07.06"	
	LENGTH:	381.6765	
	TANGENT:	191.2131	
	CHORD:	381.3027	
	MIDDLE ORDINATE:	7.3125	
	EXTERNAL:	7.3340	
	TANGENT DIRECTION:	S 51° 28' 48.26" E	
	RADIAL DIRECTION:	S 38° 31' 11.74" W	
	CHORD DIRECTION:	S 47° 05' 13.38" E	
	RADIAL DIRECTION:	S 47° 18' 21.49" W	
	TANGENT DIRECTION:	S 42° 41' 38.51" E	

LEGEND

Temporary Concrete Barrier Wall
Channelizing Device
Construction This Phase

SIGNS WILL BE COVERED, REMOVED, STORED, OR PLACED AS DIRECTED BY THE ENGINEER.

SCALE: 1"= 50'

MAINTENANCE OF TRAFFIC PLAN
PHASE 3
SLIP RAMP I-275 C2

MicroStation v8.11.7.443
E-SHEET NAME:
USER: tvonbehren
DATE PLOTTED: January 2, 2012
FILE NAME: P:\CIVIL\471\6-2021.00\CONTRACT PLANS AND PROPOSAL\CONTRACT PLAN SET\ROADWAY\R261OOMT.DGN

COUNTY OF	ITEM NO.	SHEET NO.
CAMPBELL	6-2021.00	R262

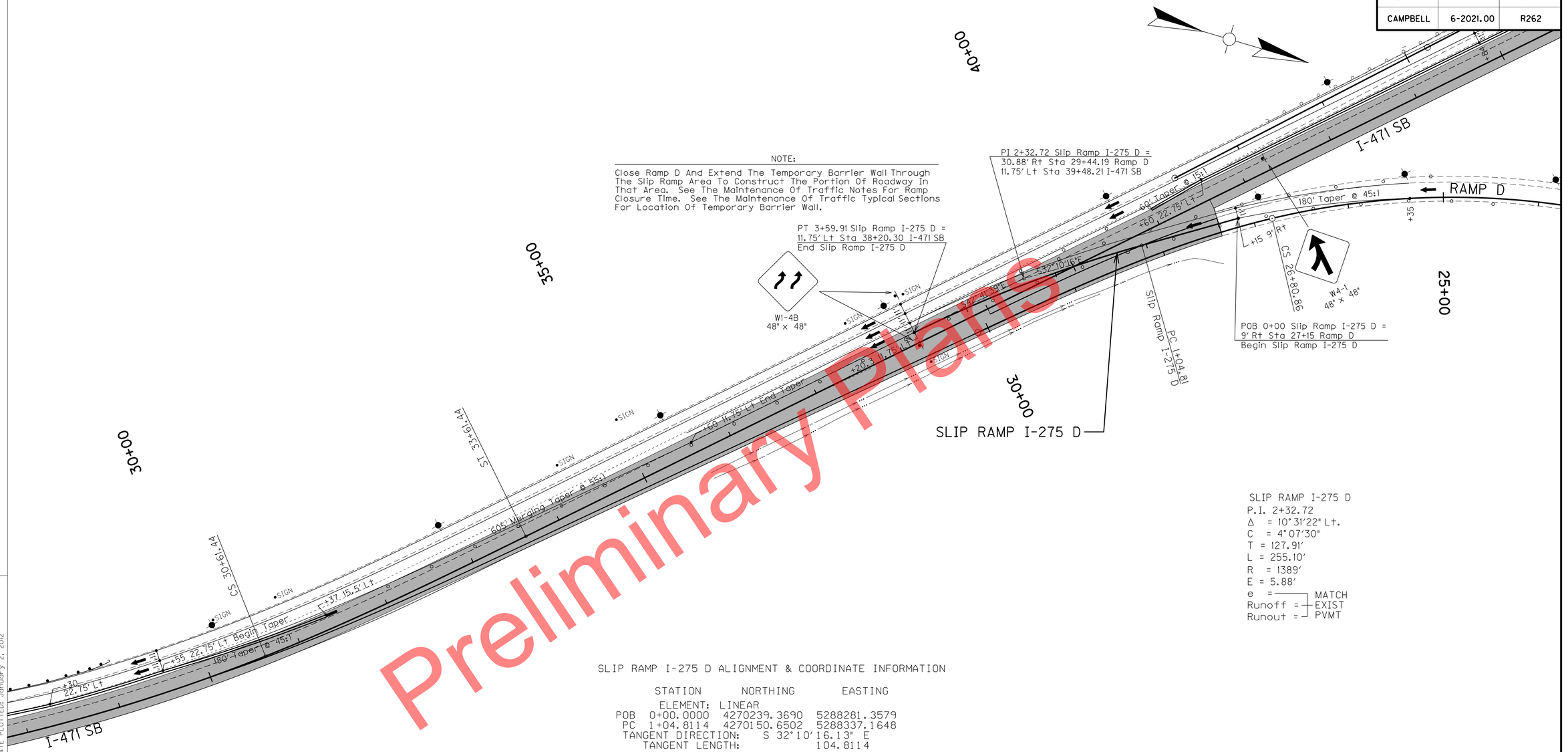

SLIP RAMP I-275 D
P.I. 2+32.72
Δ = 10° 31' 22" Lt.
C = 4° 07' 30"
T = 127.91'
L = 255.10'
R = 1389'
E = 5.88'
e = MATCH
Runoff = EXIST
Runout = PVMT

SLIP RAMP I-275 D ALIGNMENT & COORDINATE INFORMATION

	STATION	NORTHING	EASTING
	ELEMENT: LINEAR		
POB	0+00.0000	4270239.3690	5288281.3579
PC	1+04.8114	4270150.6502	5288337.1648
	TANGENT DIRECTION:	S 32° 10' 16.13" E	
	TANGENT LENGTH:	104.8114	
	ELEMENT: CIRCULAR		
PC	1+04.8114	4270150.6502	5288337.1648
PI	2+32.7223	4270042.3786	5288405.2709
CC		4270890.2234	5289512.8996
PT	3+59.9137	4269948.3660	5288492.0051
	RADIUS:	1389.0000	
	DELTA:	10° 31' 22.38" LEFT	
	DEGREE OF CURVATURE(ARC):	4° 07' 29.88"	
	LENGTH:	255.1023	
	TANGENT:	127.9109	
	CHORD:	254.7439	
	MIDDLE ORDINATE:	5.8524	
	EXTERNAL:	5.8771	
	TANGENT DIRECTION:	S 32° 10' 16.13" E	
	RADIAL DIRECTION:	S 57° 49' 43.87" W	
	CHORD DIRECTION:	S 37° 25' 57.32" E	
	RADIAL DIRECTION:	S 47° 18' 21.49" W	
	TANGENT DIRECTION:	S 42° 41' 38.51" E	

LEGEND

- Temporary Concrete Barrier Wall
- Channelizing Device
- Construction This Phase

SIGNS WILL BE COVERED, REMOVED, STORED, OR PLACED AS DIRECTED BY THE ENGINEER.

SCALE: 1"= 50'

MAINTENANCE OF TRAFFIC PLAN
PHASE 2
SLIP RAMP I-275 D

Preliminary Plans

FILE NAME: P:\CIVIL\147\N6-2021.00\CONTRACT PLANS AND PROPOSAL\CONTRACT PLAN SET\ROADWAY\R262OMT.DGN
USER: tvonbehren
DATE PLOTTED: January 2, 2012
E-SHEET NAME:
MicroStation v8.11.7.443

COUNTY OF	ITEM NO.	SHEET NO.
CAMPBELL	6-2021.00	R263

NOTE:

Close Ramp E And Extend The Temporary Barrier Wall Through The Slip Ramp Area To Construct The Portion Of Roadway In That Area. See The Maintenance Of Traffic Notes For Ramp Closure Time. See The Maintenance Of Traffic Typical Sections For Location Of Temporary Barrier Wall.

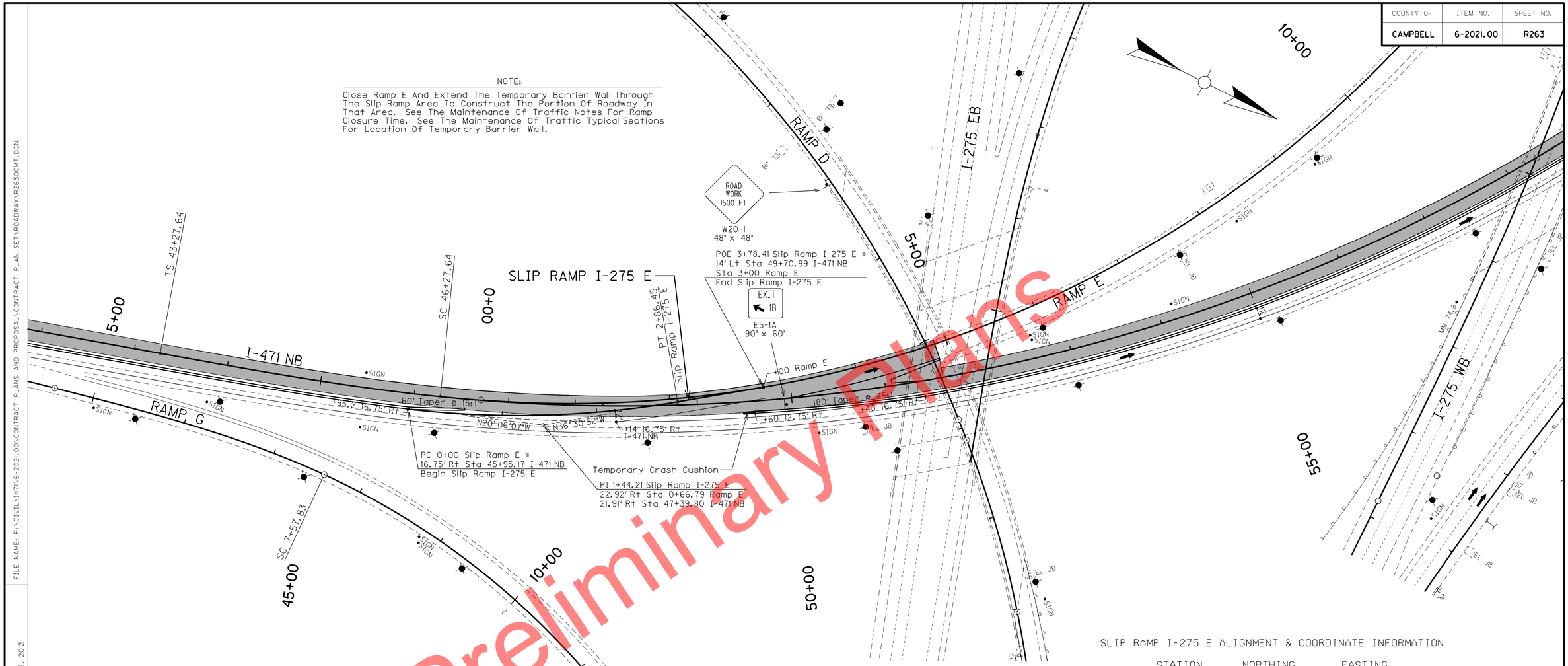

Preliminary Plans

SLIP RAMP I-275 E
P.I. 1+44.21
Δ = 16°24'45" Rt.
C = 5°43'46"
T = 144.21'
L = 286.45'
R = 1000'
E = 10.35'
e = MATCH
Runoff = EXIST
Runout = PVMT

LEGEND

- Temporary Concrete Barrier Wall
- Channelizing Device
- Construction This Phase

SIGNS WILL BE COVERED, REMOVED, STORED, OR PLACED AS DIRECTED BY THE ENGINEER.

SLIP RAMP I-275 E ALIGNMENT & COORDINATE INFORMATION

	STATION	NORTHING	EASTING
	ELEMENT: CIRCULAR		
PC	0+00.0000	4270925.1234	5288719.0037
PI	1+44.2144	4271060.5526	5288669.4385
CC		4270581.4324	5287779.9209
PT	2+86.4538	4271176.4586	5288583.6272
	RADIUS:	1000.0000	
	DELTA:	16° 24' 45.35"	LEFT
DEGREE OF CURVATURE(ARC):		5° 43' 46.48"	
	LENGTH:	286.4538	
	TANGENT:	144.2144	
	CHORD:	285.4755	
	MIDDLE ORDINATE:	10.2395	
	EXTERNAL:	10.3454	
TANGENT DIRECTION:		N 20° 06' 06.87"	W
RADIAL DIRECTION:		N 69° 53' 53.13"	E
CHORD DIRECTION:		N 28° 18' 29.54"	W
RADIAL DIRECTION:		N 53° 29' 07.79"	E
TANGENT DIRECTION:		N 36° 30' 52.21"	W
	ELEMENT: LINEAR		
PT	2+86.4538	4271176.4586	5288583.6272
POE	3+78.4057	4271250.3610	5288528.9134
TANGENT DIRECTION:		N 36° 30' 52.21"	W
TANGENT LENGTH:		91.9519	

SCALE: 1"= 50'

MAINTENANCE OF TRAFFIC PLAN
PHASE 2
SLIP RAMP I-275 E

MicroStation v8.11.7.443
E-SHEET NAME:
USER: tvonbehren
DATE PLOTTED: January 2, 2012
FILE NAME: P:\CIVIL\147\N6-2021.00\CONTRACT PLANS AND PROPOSAL\CONTRACT PLAN SET\ROADWAY\R263OMT.DGN

COUNTY OF	ITEM NO.	SHEET NO.
CAMPBELL	6-2021.00	R264

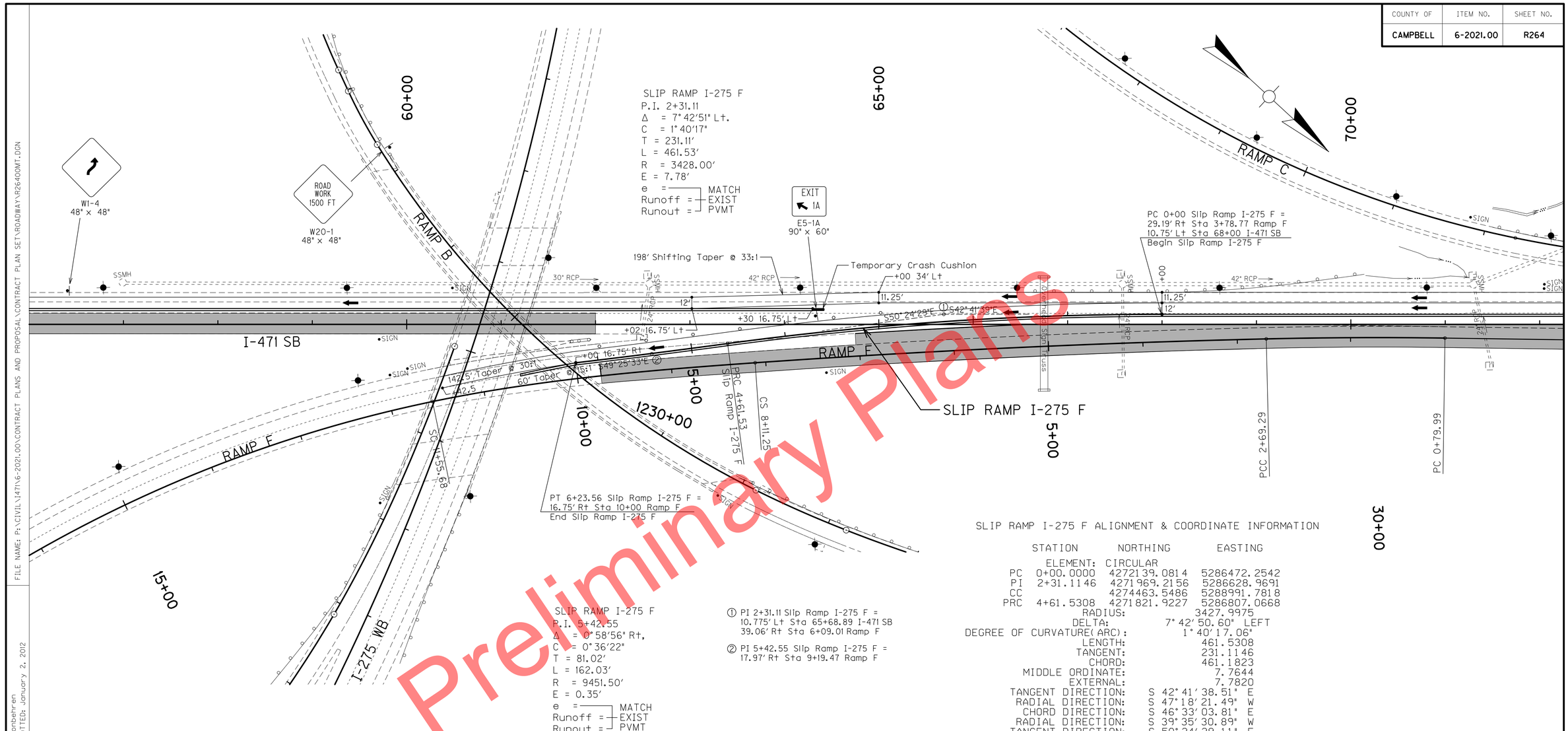

SLIP RAMP I-275 F ALIGNMENT & COORDINATE INFORMATION

STATION	NORTHING	EASTING
ELEMENT: CIRCULAR		
PC 0+00.0000	4272139.0814	5286472.2542
PI 2+31.1146	4271969.2156	5286628.9691
CC	4274463.5486	5288991.7818
PRC 4+61.5308	4271821.9227	5286807.0668
RADIUS:	3427.9975	
DELTA:	7°42'50.60"	LEFT
DEGREE OF CURVATURE(ARC):	1°40'17.06"	
LENGTH:	461.5308	
TANGENT:	231.1146	
CHORD:	461.1823	
MIDDLE ORDINATE:	7.7644	
EXTERNAL:	7.7820	
TANGENT DIRECTION:	S 42°41'38.51"	E
RADIAL DIRECTION:	S 47°18'21.49"	W
CHORD DIRECTION:	S 46°33'03.81"	E
RADIAL DIRECTION:	S 39°35'30.89"	W
TANGENT DIRECTION:	S 50°24'29.11"	E

ELEMENT: CIRCULAR		
PRC 4+61.5308	4271821.9227	5286807.0668
PI 5+42.5482	4271770.2891	5286869.4990
CC	4264538.5657	5280783.4813
PT 6+23.5616	4271717.5928	5286931.0370
RADIUS:	9451.5010	
DELTA:	0°58'56.08"	RIGHT
DEGREE OF CURVATURE(ARC):	0°36'22.35"	
LENGTH:	162.0308	
TANGENT:	81.0174	
CHORD:	162.0289	
MIDDLE ORDINATE:	0.3472	
EXTERNAL:	0.3472	
TANGENT DIRECTION:	S 50°24'29.11"	E
RADIAL DIRECTION:	S 39°35'30.89"	W
CHORD DIRECTION:	S 49°55'01.07"	E
RADIAL DIRECTION:	S 40°34'26.97"	W
TANGENT DIRECTION:	S 49°25'33.03"	E

LEGEND

- Temporary Concrete Barrier Wall
- Channelizing Device
- Construction This Phase

SIGNS WILL BE COVERED, REMOVED, STORED, OR PLACED AS DIRECTED BY THE ENGINEER.

SCALE: 1"= 50'

MAINTENANCE OF TRAFFIC PLAN
PHASE 2
SLIP RAMP I-275 F

Preliminary Plans

FILE NAME: P:\CIVIL\147\N6-2021.00\CONTRACT PLANS AND PROPOSAL\CONTRACT PLAN SET\ROADWAY\R264OMT.DGN
USER: tvanbehren
DATE PLOTTED: January 2, 2012
E-SHEET NAME:
MicroStation v8.11.7.443

COUNTY OF	ITEM NO.	SHEET NO.
CAMPBELL	6-2021.00	R265

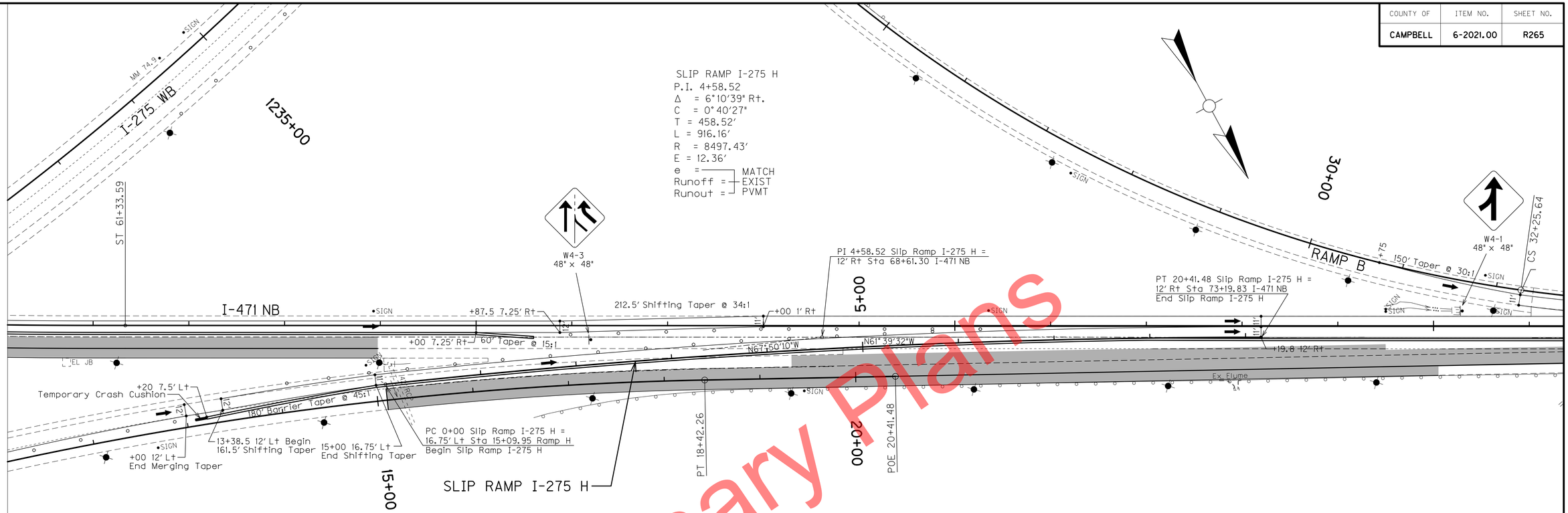

Preliminary Plans

SLIP RAMP I-275 H ALIGNMENT & COORDINATE INFORMATION

	STATION	NORTHING	EASTING
ELEMENT:	CIRCULAR		
PC	0+00.0000	4272202.8702	5287474.0953
PI	4+58.5223	4272375.8503	5287049.4536
CC		4280072.4166	5290679.7986
PT	9+16.1560	4272593.5204	5286645.8915
RADIUS:		8497.4287	
DELTA:		6°10'38.58"	RIGHT
DEGREE OF CURVATURE(ARC):		0°40'27.38"	
LENGTH:		916.1560	
TANGENT:		458.5223	
CHORD:		915.7124	
MIDDLE ORDINATE:		12.3440	
EXTERNAL:		12.3620	
TANGENT DIRECTION:		N 67°50'10.33"	W
RADIAL DIRECTION:		N 22°09'49.67"	E
CHORD DIRECTION:		N 64°44'51.04"	W
RADIAL DIRECTION:		N 28°20'28.25"	E
TANGENT DIRECTION:		N 61°39'31.75"	W

LEGEND

- Temporary Concrete Barrier Wall
- Channelizing Device
- Construction This Phase

SIGNS WILL BE COVERED, REMOVED, STORED, OR PLACED AS DIRECTED BY THE ENGINEER.

SCALE: 1"= 50'

MAINTENANCE OF TRAFFIC PLAN
PHASE 3
SLIP RAMP I-275 H

MicroStation v8.11.7.443
E-SHEET NAME:
USER: tvonbehren
DATE PLOTTED: January 2, 2012
FILE NAME: P:\CIVIL\147N\6-2021.00\CONTRACT PLANS AND PROPOSAL\CONTRACT PLAN SET\ROADWAY\R265OMT.DGN

COUNTY OF	ITEM NO.	SHEET NO.
CAMPBELL	6-2021.00	R266

SLIP RAMP US 27 A
P.I. 2+78.31
Δ = 19°20'33" Rt.
C = 3°30'30"
T = 278.31'
L = 551.33'
R = 1633.13'
E = 23.54'
e = MATCH
Runoff = EXIST
Runout = PVMT

NOTE:

Close US 27 Ramp A And Extend The Temporary Barrier Wall Through The Slip Ramp Area To Construct The Portion Of Roadway In That Area. See The Maintenance Of Traffic Notes For Ramp Closure Time. See The Maintenance Of Traffic Typical Sections For Location Of Temporary Barrier Wall.

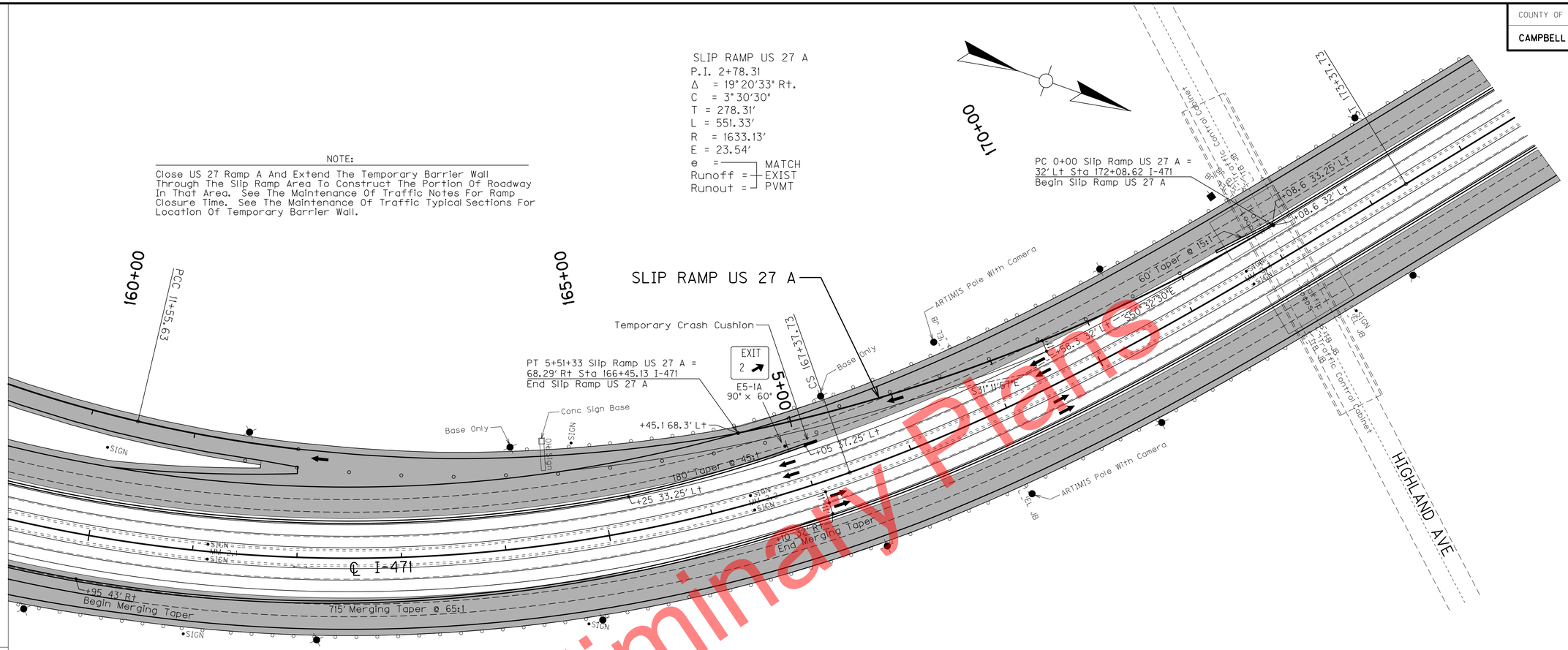

Preliminary Plans

SLIP RAMP US 27 A ALIGNMENT & COORDINATE INFORMATION

	STATION	NORTHING	EASTING
	ELEMENT:	CIRCULAR	
PC	0+00.0000	4281243.0157	5285993.6240
PI	2+78.3124	4281066.1430	5286208.5050
CC		4279982.0966	5284955.7374
PT	5+51.3283	4280828.0823	5286352.6747
	RADIUS:	1633.1336	
	DELTA:	19°20'32.78"	RIGHT
DEGREE OF CURVATURE(ARC):		3°30'30.00"	
	LENGTH:	551.3283	
	TANGENT:	278.3124	
	CHORD:	548.7140	
	MIDDLE ORDINATE:	23.2101	
	EXTERNAL:	23.5447	
TANGENT	DIRECTION:	S 50°32'29.58"	E
RADIAL	DIRECTION:	S 39°27'30.42"	W
CHORD	DIRECTION:	S 40°52'13.20"	E
RADIAL	DIRECTION:	S 58°48'03.19"	W
TANGENT	DIRECTION:	S 31°11'56.81"	E

LEGEND

- Temporary Concrete Barrier Wall
- Channelizing Device
- Construction This Phase

SIGNS WILL BE COVERED, REMOVED, STORED, OR PLACED AS DIRECTED BY THE ENGINEER.

SCALE: 1"= 50'

MAINTENANCE OF TRAFFIC PLAN
PHASE 3
SLIP RAMP US 27 A

MicroStation v8.11.7.443
E-SHEET NAME:
USER: tvonbehren
DATE PLOTTED: January 2, 2012
FILE NAME: P:\CIVIL\147IN\6-2021.00\CONTRACT PLANS AND PROPOSAL\CONTRACT PLAN SET\ROADWAY\R266GOMT.DGN

COUNTY OF	ITEM NO.	SHEET NO.
CAMPBELL	6-2021.00	R267

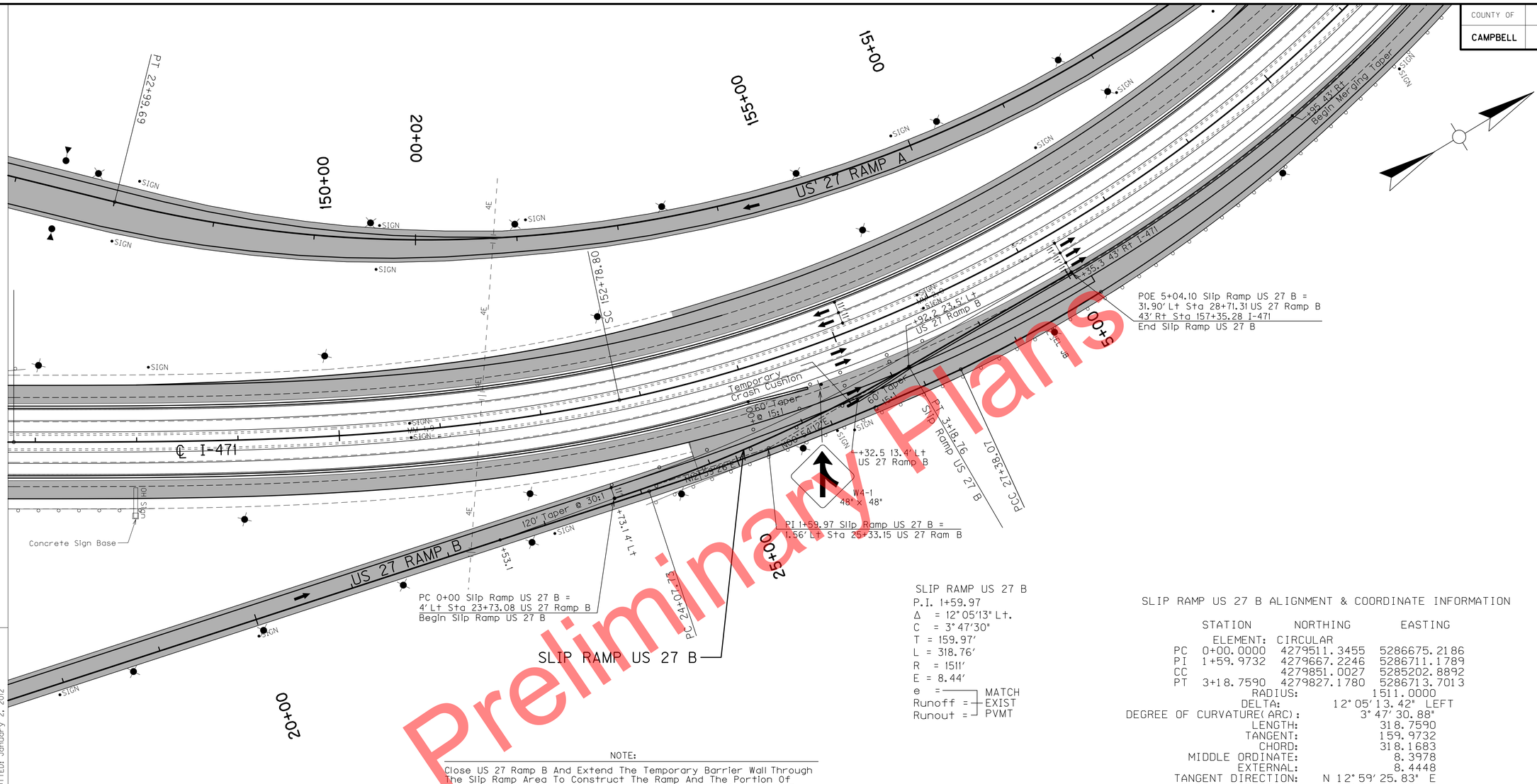

Preliminary Plans

NOTE:

Close US 27 Ramp B And Extend The Temporary Barrier Wall Through The Slip Ramp Area To Construct The Ramp And The Portion Of Roadway In That Area. See The Maintenance Of Traffic Notes For Ramp Closure Time. See The Maintenance Of Traffic Typical Sections For Location Of Temporary Barrier Wall.

SLIP RAMP US 27 B
P.I. 1+59.97
Δ = 12°05'13" Lt.
C = 3°47'30"
T = 159.97'
L = 318.76'
R = 1511'
E = 8.44'
e = MATCH
Runoff = EXIST
Runout = PVMT

SLIP RAMP US 27 B ALIGNMENT & COORDINATE INFORMATION

	STATION	NORTHING	EASTING
	ELEMENT: CIRCULAR		
PC	0+00.0000	4279511.3455	5286675.2186
PI	1+59.9732	4279667.2246	5286711.1789
CC		4279851.0027	5285202.8892
PT	3+18.7590	4279827.1780	5286713.7013
	RADIUS:	1511.0000	
	DELTA:	12°05'13.42"	LEFT
	DEGREE OF CURVATURE(ARC):	3°47'30.88"	
	LENGTH:	318.7590	
	TANGENT:	159.9732	
	CHORD:	318.1683	
	MIDDLE ORDINATE:	8.3978	
	EXTERNAL:	8.4448	
	TANGENT DIRECTION:	N 12°59'25.83"	E
	RADIAL DIRECTION:	S 77°00'34.17"	E
	CHORD DIRECTION:	N 6°56'49.12"	E
	RADIAL DIRECTION:	S 89°05'47.59"	E
	TANGENT DIRECTION:	N 0°54'12.41"	E
	ELEMENT: LINEAR		
PT	3+18.7590	4279827.1780	5286713.7013
POE	5+04.0971	4280012.4930	5286716.6236
	TANGENT DIRECTION:	N 0°54'12.41"	E
	TANGENT LENGTH:	185.3381	

LEGEND

- Temporary Concrete Barrier Wall
- Channelizing Device
- Construction This Phase

SIGNS WILL BE COVERED, REMOVED, STORED, OR PLACED AS DIRECTED BY THE ENGINEER.

SCALE: 1"= 50'

MAINTENANCE OF TRAFFIC PLAN
PHASE 3
SLIP RAMP US 27 B

FILE NAME: P:\CIVIL\147\N6-2021.00\CONTRACT PLANS AND PROPOSAL\CONTRACT PLAN SET\ROADWAY\R267GOMT.DGN
USER: tvanbehren
DATE PLOTTED: January 2, 2012
E-SHEET NAME:
MicroStation v8.11.7.443

COUNTY OF	ITEM NO.	SHEET NO.
CAMPBELL	6-2021.00	R268

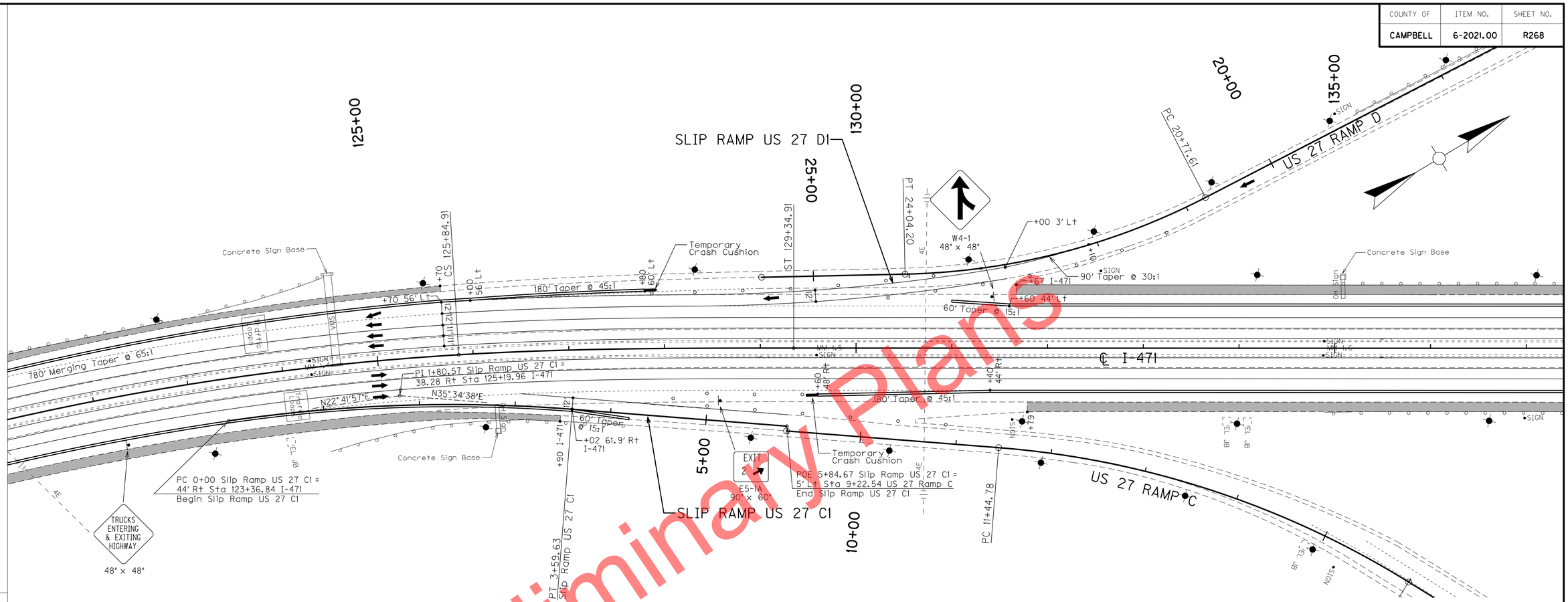

Preliminary Plans

SLIP RAMP US 27 C1
P.I. 1+80.57
Δ = 12°52'41" Rt.
C = 3°34'51"
T = 180.57'
L = 359.63'
R = 1600'
E = 10.16'
e = MATCH
Runoff = EXIST
Runout = PVMT

LEGEND

- Temporary Concrete Barrier Wall
- Channelizing Device
- Construction This Phase

SIGNS WILL BE COVERED, REMOVED, STORED, OR PLACED AS DIRECTED BY THE ENGINEER.

SLIP RAMP US 27 C1 ALIGNMENT & COORDINATE INFORMATION

	STATION	NORTHING	EASTING
	ELEMENT: CIRCULAR		
PC	0+00.0000	4276994.2643	5285181.9678
PI	1+80.5735	4277160.8514	5285251.6495
CC		4276376.8390	5286658.0390
PT	3+59.6252	4277307.7176	5285356.7070
	RADIUS:	1600.0000	
	DELTA:	12° 52' 41.26"	RIGHT
	DEGREE OF CURVATURE(ARC):	3° 34' 51.55"	
	LENGTH:	359.6252	
	TANGENT:	180.5735	
	CHORD:	358.8687	
	MIDDLE ORDINATE:	10.0933	
	EXTERNAL:	10.1574	
	TANGENT DIRECTION:	N 22° 41' 56.60"	E
	RADIAL DIRECTION:	S 67° 18' 03.40"	E
	CHORD DIRECTION:	N 29° 08' 17.24"	E
	RADIAL DIRECTION:	S 54° 25' 22.13"	E
	TANGENT DIRECTION:	N 35° 34' 37.87"	E
	ELEMENT: LINEAR		
PT	3+59.6252	4277307.7176	5285356.7070
POE	5+84.6666	4277490.7511	5285487.6359
	TANGENT DIRECTION:	N 35° 34' 37.87"	E
	TANGENT LENGTH:	225.0414	

SCALE: 1"= 50'

MAINTENANCE OF TRAFFIC PLAN
PHASE 1
SLIP RAMP US 27 C1

FILE NAME: P:\CIVIL\147\N6-2021.00\CONTRACT PLANS AND PROPOSAL\CONTRACT PLAN SET\ROADWAY\R268OMT.DGN
USER: tvonbehren
DATE PLOTTED: January 2, 2012
E-SHEET NAME:
MicroStation v8.11.7.443

COUNTY OF	ITEM NO.	SHEET NO.
CAMPBELL	6-2021.00	R269

NOTE:

Close US 27 Ramps C And D And Extend The Temporary Barrier Wall Through The Slip Ramp Area To Construct The Ramp And The Portion Of Roadway In That Area. See The Maintenance Of Traffic Notes For Ramp Closure Time. See The Maintenance Of Traffic Typical Sections For Location Of Temporary Barrier Wall.

SLIP RAMP US 27 C2 ALIGNMENT & COORDINATE INFORMATION

	STATION	NORTHING	EASTING
	ELEMENT:	CIRCULAR	
PC	0+00.0000	4276695.8860	5285063.7406
PI	3+40.5150	4277022.7934	5285159.0403
CC		4276136.1470	5286983.8167
PT	6+74.5617	4277299.7453	5285357.1517
	RADIUS:		2000.0000
	DELTA:		19°19'29.17" RIGHT
	DEGREE OF CURVATURE(ARC):		2°51'53.24"
	LENGTH:		674.5617
	TANGENT:		340.5150
	CHORD:		671.3689
	MIDDLE ORDINATE:		28.3723
	EXTERNAL:		28.7805
	TANGENT DIRECTION:	N 16°15'08.70" E	
	RADIAL DIRECTION:	S 73°44'51.30" E	
	CHORD DIRECTION:	N 25°54'53.28" E	
	RADIAL DIRECTION:	S 54°25'22.13" E	
	TANGENT DIRECTION:	N 35°34'37.87" E	
	ELEMENT:	LINEAR	
PT	6+74.5617	4277299.7453	5285357.1517
POE	9+05.8286	4277487.8421	5285491.7025
	TANGENT DIRECTION:	N 35°34'37.87" E	
	TANGENT LENGTH:		231.2668

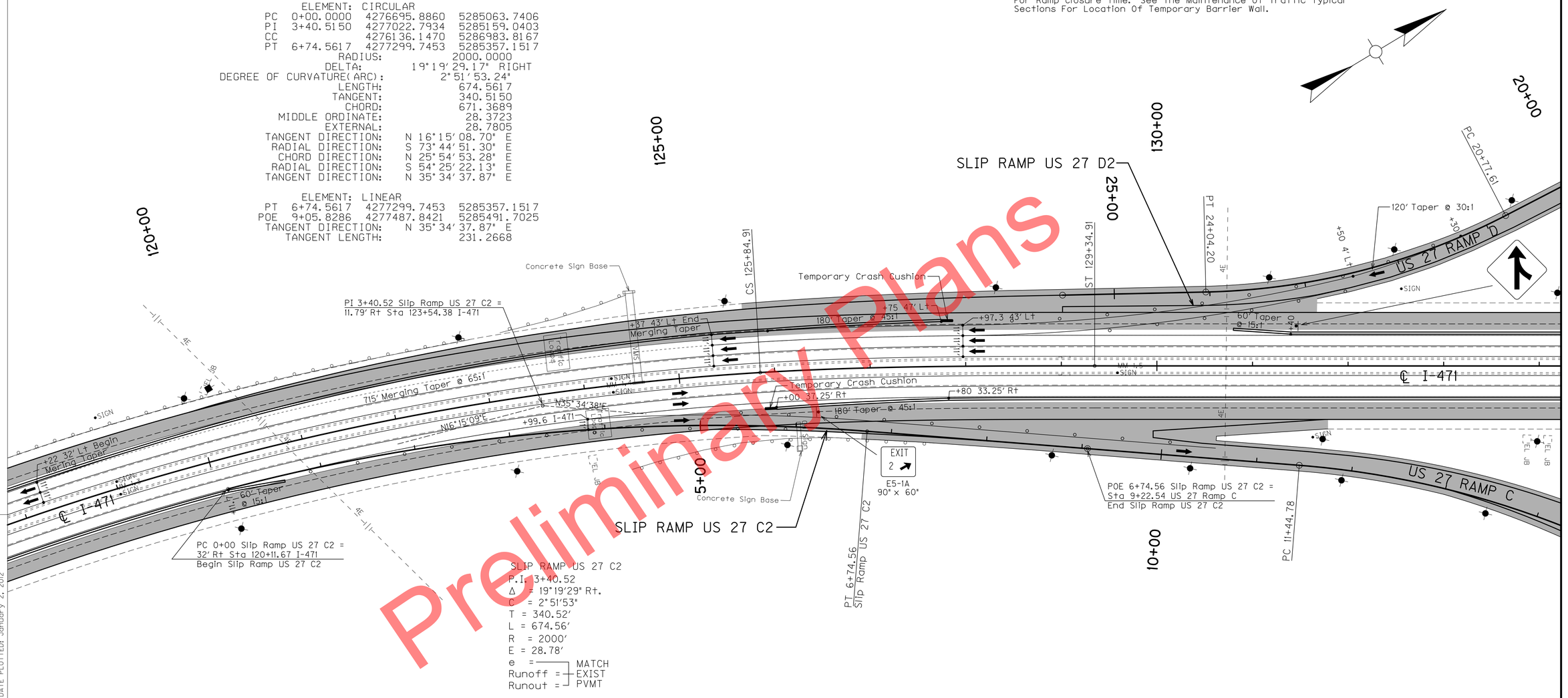

Preliminary Plans

LEGEND

- Temporary Concrete Barrier Wall
- Channelizing Device
- Construction This Phase

SIGNS WILL BE COVERED, REMOVED, STORED, OR PLACED AS DIRECTED BY THE ENGINEER.

SCALE: 1"= 50'

MAINTENANCE OF TRAFFIC PLAN
PHASE 3
SLIP RAMP US 27 C2

FILE NAME: P:\CIVIL\147\N6-2021.00\CONTRACT PLANS AND PROPOSAL\CONTRACT PLAN SET\ROADWAY\R269OMT.DGN
USER: tvonbehren
DATE PLOTTED: January 2, 2012
E-SHEET NAME:
MicroStation v8.11.7.443

COUNTY OF	ITEM NO.	SHEET NO.
CAMPBELL	6-2021.00	R270

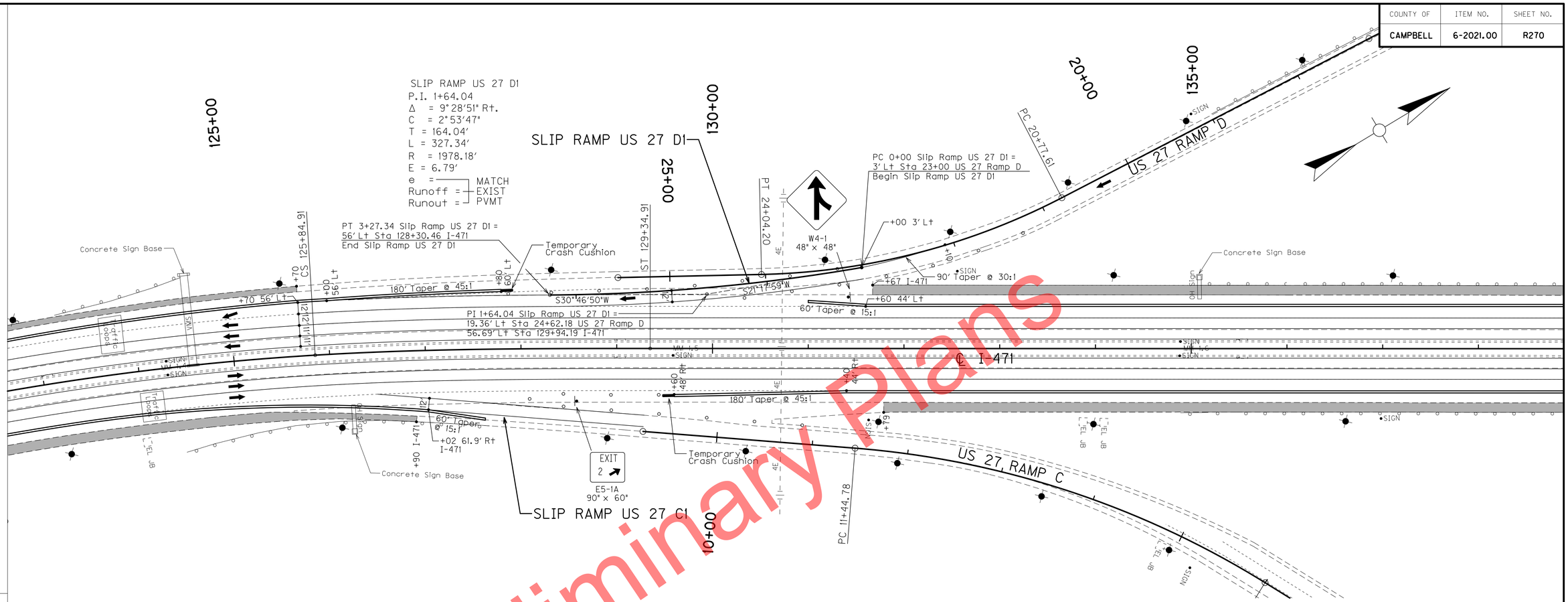

Preliminary Plans

SLIP RAMP US 27 D1 ALIGNMENT & COORDINATE INFORMATION

	STATION	NORTHING	EASTING
	ELEMENT: CIRCULAR		
PC	0+00.0000	4277771.8597	5285463.0571
PI	1+64.0423	4277619.0227	5285403.4693
CC		4278490.4260	5283620.0033
PT	3+27.3356	4277478.0886	5285319.5202
	RADIUS:	1978.1771	
	DELTA:	9° 28' 51.32"	RIGHT
	DEGREE OF CURVATURE(ARC):	2° 53' 47.01"	
	LENGTH:	327.3356	
	TANGENT:	164.0423	
	CHORD:	326.9622	
	MIDDLE ORDINATE:	6.7668	
	EXTERNAL:	6.7900	
	TANGENT DIRECTION:	S 21° 17' 58.99"	W
	RADIAL DIRECTION:	N 68° 42' 01.01"	W
	CHORD DIRECTION:	S 26° 02' 24.66"	W
	RADIAL DIRECTION:	N 59° 13' 09.68"	W
	TANGENT DIRECTION:	S 30° 46' 50.32"	W

LEGEND

- Temporary Concrete Barrier Wall
- Channelizing Device
- Construction This Phase

SIGNS WILL BE COVERED, REMOVED, STORED, OR PLACED AS DIRECTED BY THE ENGINEER.

SCALE: 1"= 50'

MAINTENANCE OF TRAFFIC PLAN
PHASE 1
SLIP RAMP US 27 D1

MicroStation v8.11.7.443
E-SHEET NAME:
USER: tvonbehren
DATE PLOTTED: January 2, 2012
FILE NAME: P:\CIVIL\147IN6-2021.00\CONTRACT PLANS AND PROPOSAL\CONTRACT PLAN SET\ROADWAY\R270OMT.DGN

COUNTY OF	ITEM NO.	SHEET NO.
CAMPBELL	6-2021.00	R271

NOTE:
Close US 27 Ramps C And D And Extend The Temporary Barrier Wall Through The Slip Ramp Area To Construct The Ramp And The Portion Of Roadway In That Area. See The Maintenance Of Traffic Notes For Ramp Closure Time. See The Maintenance Of Traffic Typical Sections For Location Of Temporary Barrier Wall.

SLIP RAMP US 27 D2
P.I. 2+07.18
Δ = 13°15'26" Rt.
C = 3°12'50"
T = 207.18'
L = 412.50'
R = 1782.76'
E = 12.00'
e = MATCH
Runoff = EXIST
Runout = PVMT

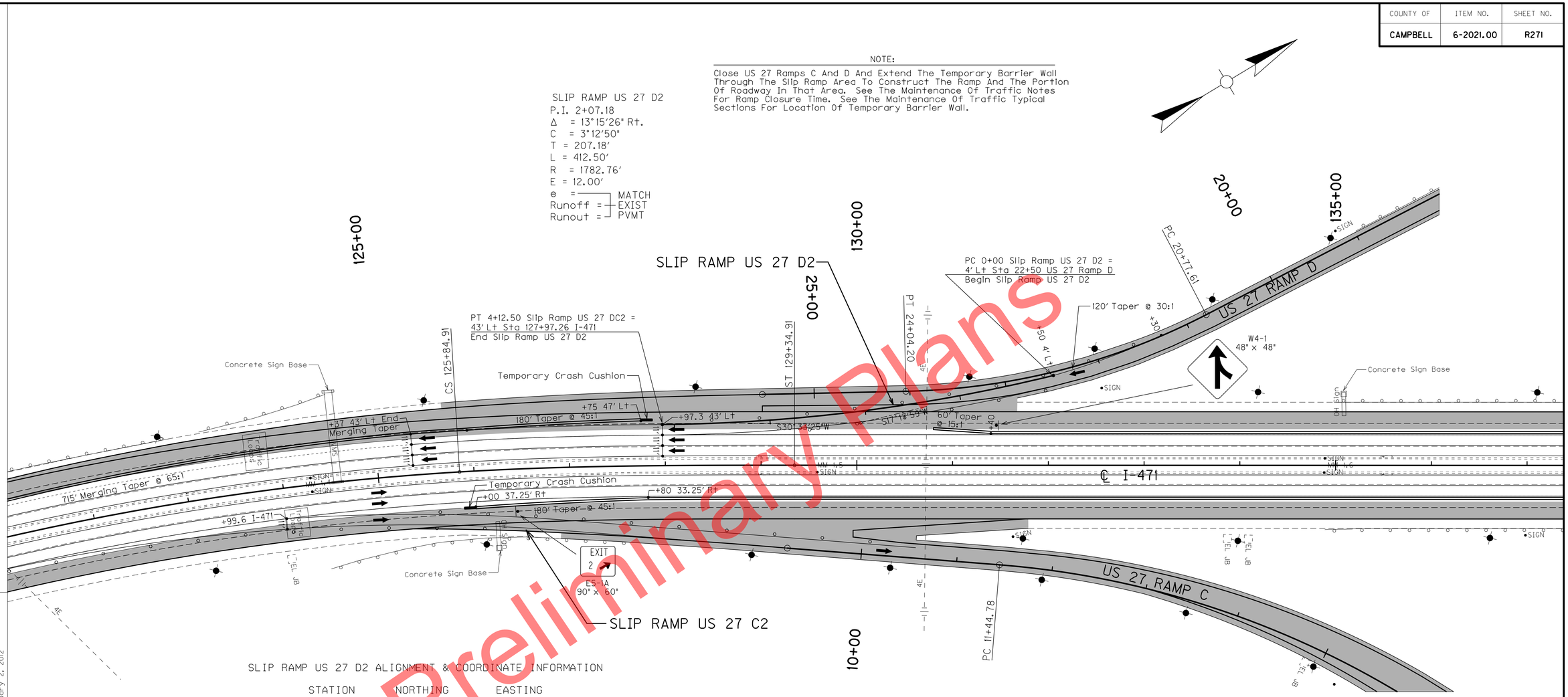

SLIP RAMP US 27 D2 ALIGNMENT & COORDINATE INFORMATION

STATION	NORTHING	EASTING
ELEMENT:	CIRCULAR	
PC 0+00.0000	4277818.9405	5285480.6032
PI 2+07.1757	4277621.1370	5285418.9953
CC	4278349.0807	5283778.4911
PT 4+12.5011	4277442.7331	5285313.6680
RADIUS:	1782.7603	
DELTA:	13°15'26.25"	RIGHT
DEGREE OF CURVATURE(ARC):	3°12'49.97"	
LENGTH:	412.5011	
TANGENT:	207.1757	
CHORD:	411.5815	
MIDDLE ORDINATE:	11.9174	
EXTERNAL:	11.9976	
TANGENT DIRECTION:	S 17°17'59.05"	W
RADIAL DIRECTION:	N 72°42'00.95"	W
CHORD DIRECTION:	S 23°55'42.17"	W
RADIAL DIRECTION:	N 59°26'34.71"	W
TANGENT DIRECTION:	S 30°33'25.29"	W

LEGEND
- Temporary Concrete Barrier Wall
- Channelizing Device
- Construction This Phase

SIGNS WILL BE COVERED, REMOVED, STORED, OR PLACED AS DIRECTED BY THE ENGINEER.

SCALE: 1"= 50'

MAINTENANCE OF TRAFFIC PLAN
PHASE 3
SLIP RAMP US 27 D2

Preliminary Plans

FILE NAME: P:\CIVIL\147\6-2021.00\CONTRACT PLANS AND PROPOSAL\CONTRACT PLAN SET\ROADWAY\R271OOMT.DGN
USER: tvonbehren
DATE PLOTTED: January 2, 2012
E-SHEET NAME:
MicroStation v8.11.7.443

COUNTY OF	ITEM NO.	SHEET NO.
CAMPBELL	6-2021.00	R272

NOTE:

Close GA Ramp E And Extend The Temporary Barrier Wall Through The Slip Ramp Area To Construct The Portion Of Roadway In That Area. See The Maintenance Of Traffic Notes For Ramp Closure Time. See The Maintenance Of Traffic Typical Sections For Location Of Temporary Barrier Wall.

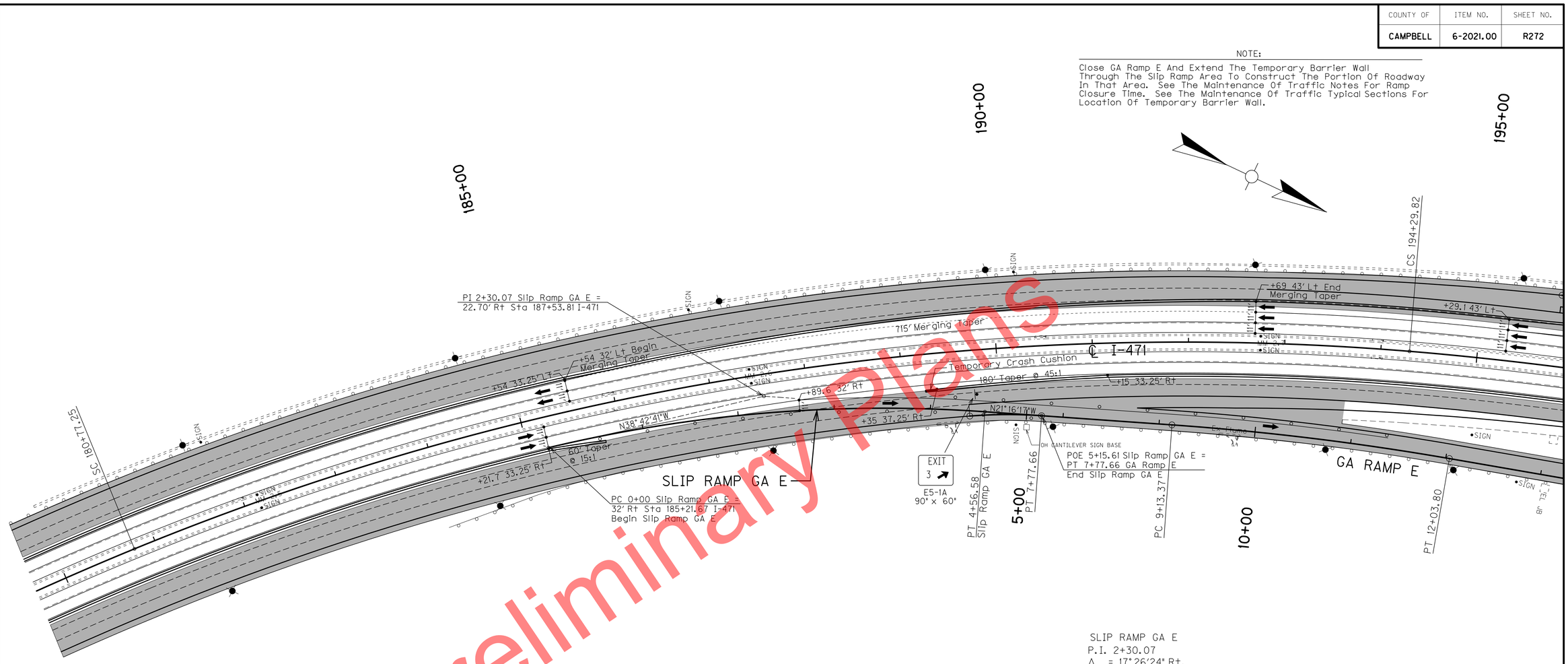

Preliminary Plans

SLIP RAMP GA E ALIGNMENT & COORDINATE INFORMATION

	STATION	NORTHING	EASTING
	ELEMENT: CIRCULAR		
PC	0+00.0000	4282163.3207	5285064.5254
PI	2+30.0689	4282342.8451	5284920.6410
CC		4283101.4158	5286234.9858
PT	4+56.5797	4282557.2402	5284837.1757
	RADIUS:	1500.0000	
	DELTA:	17° 26' 24.22"	RIGHT
	DEGREE OF CURVATURE(ARC):	3° 49' 10.99"	
	LENGTH:	456.5797	
	TANGENT:	230.0689	
	CHORD:	454.8191	
	MIDDLE ORDINATE:	17.3386	
	EXTERNAL:	17.5413	
	TANGENT DIRECTION:	N 38° 42' 40.73"	W
	RADIAL DIRECTION:	N 51° 17' 19.27"	E
	CHORD DIRECTION:	N 29° 59' 28.63"	W
	RADIAL DIRECTION:	N 68° 43' 43.48"	E
	TANGENT DIRECTION:	N 21° 16' 16.52"	W
	ELEMENT: LINEAR		
PT	4+56.5797	4282557.2402	5284837.1757
POE	5+15.6132	4282612.2520	5284815.7593
	TANGENT DIRECTION:	N 21° 16' 16.52"	W
	TANGENT LENGTH:	59.0335	

SLIP RAMP GA E
P.I. 2+30.07
Δ = 17° 26' 24" Rt.
C = 3° 49' 11"
T = 230.07'
L = 456.58'
R = 1500'
E = 17.54'
e = MATCH
Runoff = EXIST
Runout = PVMT

LEGEND

- Temporary Concrete Barrier Wall
- Channelizing Device
- Construction This Phase

SIGNS WILL BE COVERED, REMOVED, STORED, OR PLACED AS DIRECTED BY THE ENGINEER.

SCALE: 1"= 50'

MAINTENANCE OF TRAFFIC PLAN
PHASE 3
SLIP RAMP GA E

MicroStation v8.11.7.443
E-SHEET NAME:
USER: tvonbehren
DATE PLOTTED: January 2, 2012
FILE NAME: P:\CIVIL\147\N6-2021.00\CONTRACT PLANS AND PROPOSAL\CONTRACT PLAN SET\ROADWAY\R272OMT.DGN

COUNTY OF	ITEM NO.	SHEET NO.
CAMPBELL	6-2021.00	R273

NOTE:

Close GA Ramp F And Extend The Temporary Barrier Wall Through The Slip Ramp Area To Construct The Portion Of Roadway In That Area. See The Maintenance Of Traffic Notes For Ramp Closure Time. See The Maintenance Of Traffic Typical Sections For Location Of Temporary Barrier Wall.

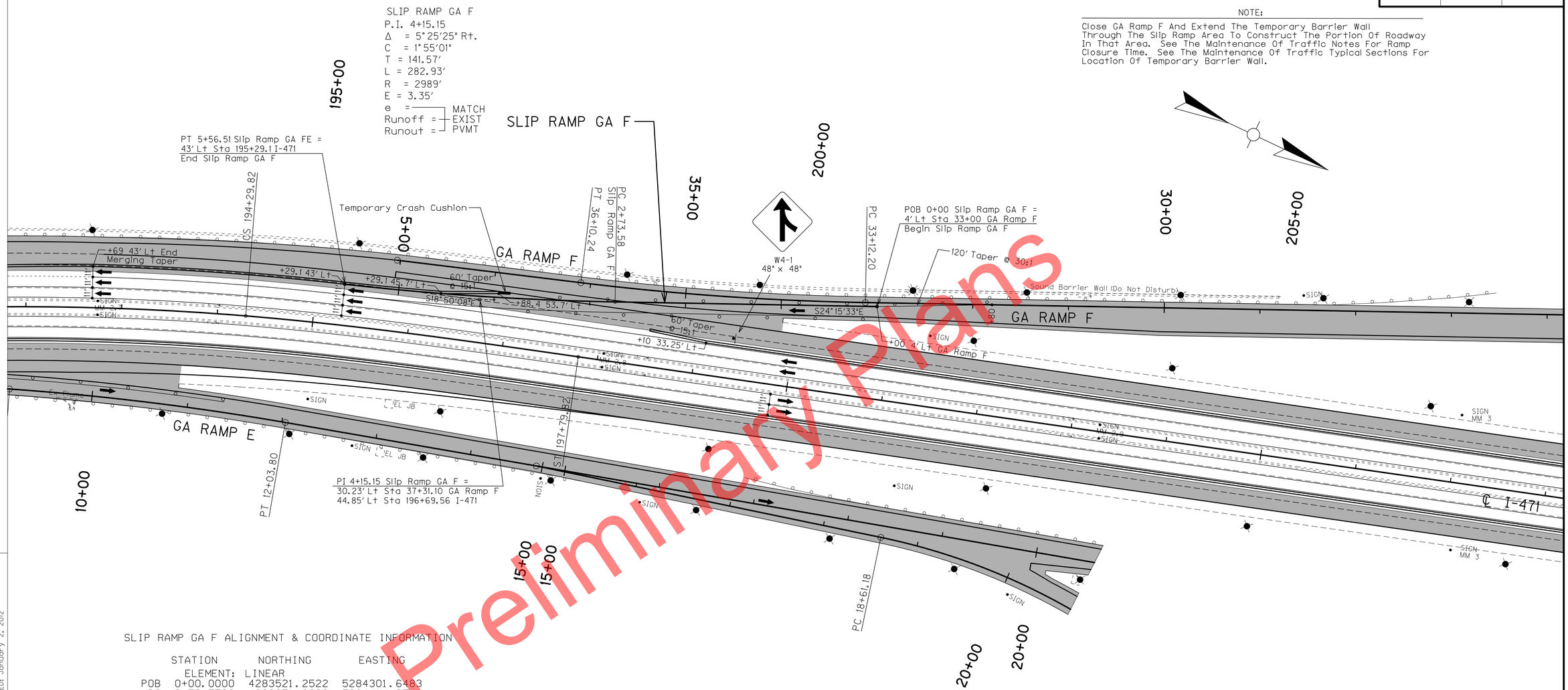

Preliminary Plans

SLIP RAMP GA F ALIGNMENT & COORDINATE INFORMATION

STATION	NORTHING	EASTING
ELEMENT: LINEAR		
POB 0+00.0000	4283521.2522	5284301.6483
PC 2+73.5769	4283271.8329	5284414.0510
TANGENT DIRECTION:	S 24°15'32.65" E	
TANGENT LENGTH:	273.5769	
ELEMENT: CIRCULAR		
PC 2+73.5769	4283271.8329	5284414.0510
PI 4+15.1486	4283142.7625	5284472.2175
CC	4282043.7629	5281688.9886
PT 5+56.5088	4283008.7721	5284517.9245
RADIUS:	2989.0000	
DELTA:	5°25'24.55" RIGHT	
DEGREE OF CURVATURE(ARC):	1°55'00.80"	
LENGTH:	282.9319	
TANGENT:	141.5717	
CHORD:	282.8263	
MIDDLE ORDINATE:	3.3471	
EXTERNAL:	3.3508	
TANGENT DIRECTION:	S 24°15'32.65" E	
RADIAL DIRECTION:	S 65°44'27.35" W	
CHORD DIRECTION:	S 21°32'50.38" E	
RADIAL DIRECTION:	S 71°09'51.90" W	
TANGENT DIRECTION:	S 18°50'08.10" E	

LEGEND

- Temporary Concrete Barrier Wall
- Channelizing Device
- Construction This Phase

SIGNS WILL BE COVERED, REMOVED, STORED, OR PLACED AS DIRECTED BY THE ENGINEER.

SCALE: 1"= 50'

MAINTENANCE OF TRAFFIC PLAN
PHASE 3
SLIP RAMP GA F

FILE NAME: P:\CIVIL\I471\6-2021.00\CONTRACT PLANS AND PROPOSAL\CONTRACT PLAN SET\ROADWAY\R27300MT.DGN
USER: tvonbehren
DATE PLOTTED: January 2, 2012
E-SHEET NAME:
MicroStation v8.11.7.443

COUNTY OF	ITEM NO.	SHEET NO.
CAMPBELL	6-2021.00	R274

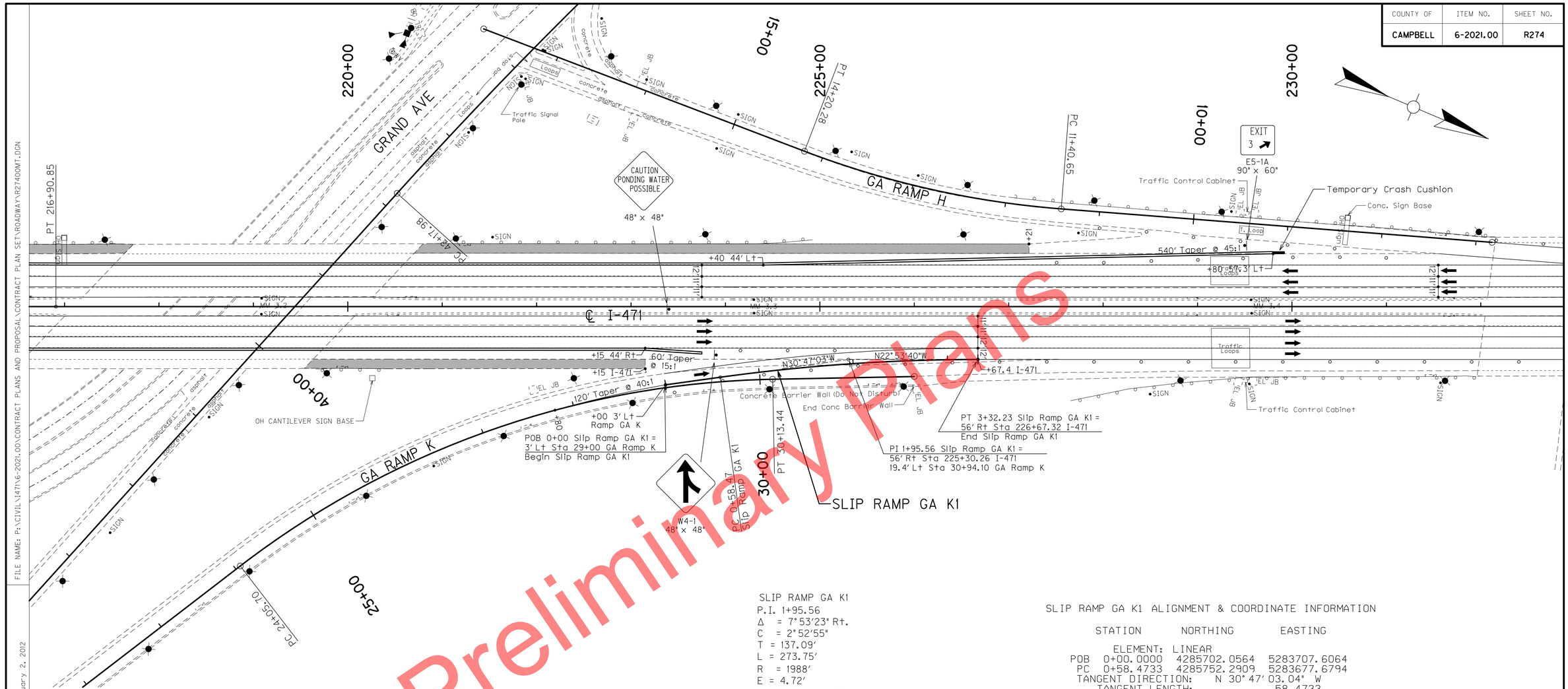

SLIP RAMP GA K1
P.I. 1+95.56
Δ = 7°53'23" Rt.
C = 2°52'55"
T = 137.09'
L = 273.75'
R = 1988'
E = 4.72'
e = MATCH
Runoff = EXIST
Runout = PVMT

SLIP RAMP GA K1 ALIGNMENT & COORDINATE INFORMATION

STATION	NORTHING	EASTING
ELEMENT: LINEAR		
POB 0+00.0000	4285702.0564	5283707.6064
PC 0+58.4733	4285752.2909	5283677.6794
TANGENT DIRECTION:	N 30° 47' 03.04" W	
TANGENT LENGTH:	58.4733	
ELEMENT: CIRCULAR		
PC 0+58.4733	4285752.2909	5283677.6794
PI 1+95.5645	4285870.0661	5283607.5154
CC	4286769.7606	5285385.5727
PT 3+32.2223	4285996.3577	5283554.1820
RADIUS:	1988.0000	
DELTA:	7° 53' 22.81" RIGHT	
DEGREE OF CURVATURE(ARC):	2° 52' 55.49"	
LENGTH:	273.7490	
TANGENT:	137.0912	
CHORD:	273.5328	
MIDDLE ORDINATE:	4.7101	
EXTERNAL:	4.7213	
TANGENT DIRECTION:	N 30° 47' 03.04" W	
RADIAL DIRECTION:	N 59° 12' 56.96" E	
CHORD DIRECTION:	N 26° 50' 21.64" W	
RADIAL DIRECTION:	N 67° 06' 19.77" E	
TANGENT DIRECTION:	N 22° 53' 40.23" W	

LEGEND

- Temporary Concrete Barrier Wall
- Channelizing Device
- Construction This Phase

SIGNS WILL BE COVERED, REMOVED, STORED, OR PLACED AS DIRECTED BY THE ENGINEER.

SCALE: 1"= 50'

MAINTENANCE OF TRAFFIC PLAN
PHASE 1
SLIP RAMP GA K1

FILE NAME: P:\CIVIL\147\N6-2021.00\CONTRACT PLANS AND PROPOSAL\CONTRACT PLAN SET\ROADWAY\R274OMT.DGN
USER: tvonbehren
DATE PLOTTED: January 2, 2012
E-SHEET NAME:
MicroStation v8.11.7.443

COUNTY OF	ITEM NO.	SHEET NO.
CAMPBELL	6-2021.00	R275

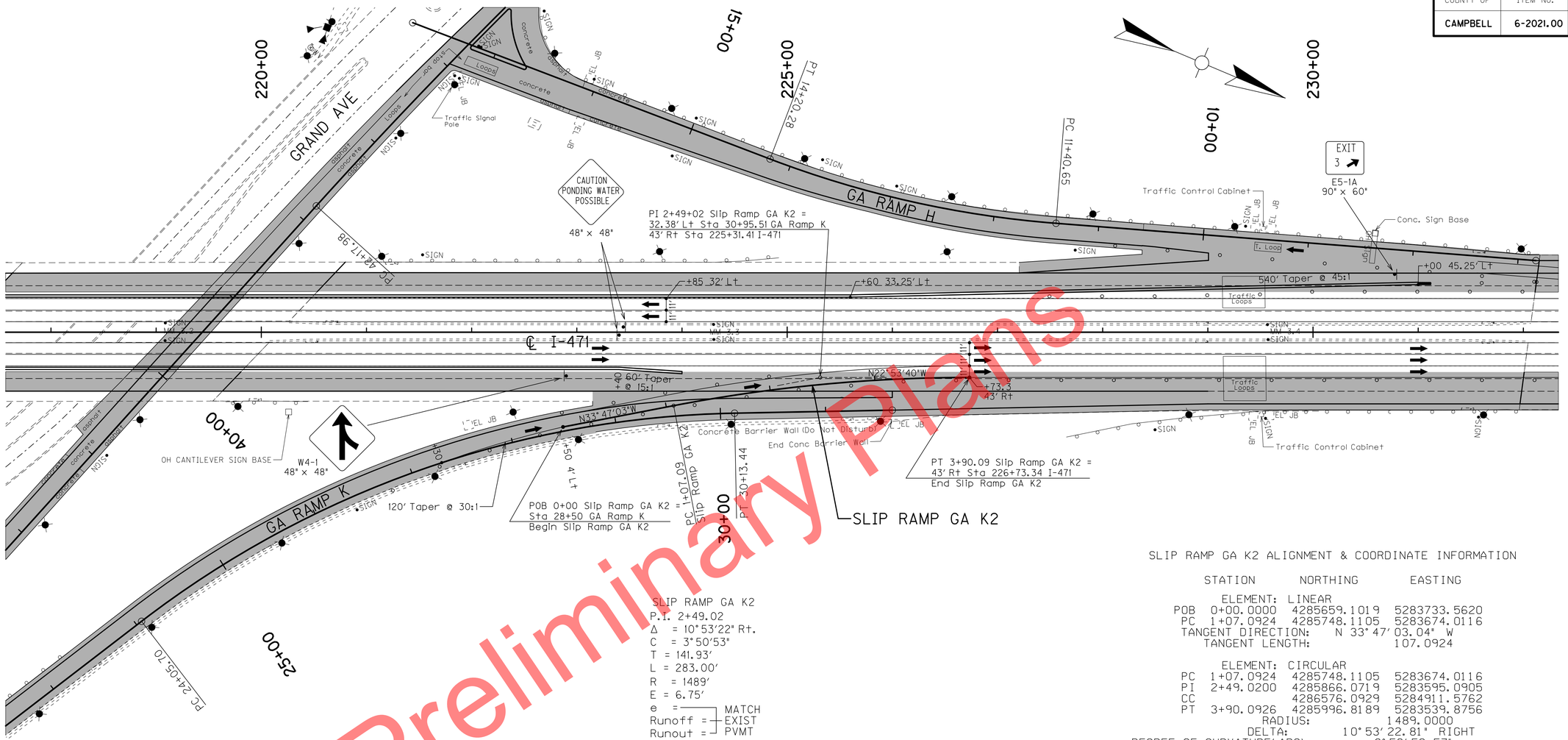

SLIP RAMP GA K2
P.I. 2+49.02
Δ = 10°53'22" Rt.
C = 3°50'53"
T = 141.93'
L = 283.00'
R = 1489'
E = 6.75'
e = MATCH
Runoff = EXIST
Runout = PVMT

NOTE:

Close GA Ramp K And Extend The Temporary Barrier Wall Through The Slip Ramp Area To Construct The Portion Of Roadway In That Area. See The Maintenance Of Traffic Notes For Ramp Closure Time. See The Maintenance Of Traffic Typical Sections For Location Of Temporary Barrier Wall.

SLIP RAMP GA K2 ALIGNMENT & COORDINATE INFORMATION

	STATION	NORTHING	EASTING
ELEMENT: LINEAR			
POB	0+00.0000	4285659.1019	5283733.5620
PC	1+07.0924	4285748.1105	5283674.0116
TANGENT DIRECTION:		N 33° 47' 03.04" W	
TANGENT LENGTH:		107.0924	
ELEMENT: CIRCULAR			
PC	1+07.0924	4285748.1105	5283674.0116
PI	2+49.0200	4285866.0719	5283595.0905
CC		4286576.0929	5284911.5762
PT	3+90.0926	4285996.8189	5283539.8756
RADIUS:		1489.0000	
DELTA:		10° 53' 22.81"	RIGHT
DEGREE OF CURVATURE(ARC):		3° 50' 52.57"	
LENGTH:		283.0002	
TANGENT:		141.9276	
CHORD:		282.5745	
MIDDLE ORDINATE:		6.7183	
EXTERNAL:		6.7488	
TANGENT DIRECTION:		N 33° 47' 03.04" W	
RADIAL DIRECTION:		N 56° 12' 56.96" E	
CHORD DIRECTION:		N 28° 20' 21.64" W	
RADIAL DIRECTION:		N 67° 06' 19.77" E	
TANGENT DIRECTION:		N 22° 53' 40.23" W	

LEGEND

- Temporary Concrete Barrier Wall
- Channelizing Device
- Construction This Phase

SIGNS WILL BE COVERED, REMOVED, STORED, OR PLACED AS DIRECTED BY THE ENGINEER.

SCALE: 1"= 50'

MAINTENANCE OF TRAFFIC PLAN
PHASE 3
SLIP RAMP GA K2

Preliminary Plans

MicroStation v8.11.7.443
E-SHEET NAME:
USER: tvonbehren
DATE PLOTTED: January 2, 2012
FILE NAME: P:\CIVIL\147\N6-2021.00\CONTRACT PLANS AND PROPOSAL\CONTRACT PLAN SET\ROADWAY\R275OMT.DGN

COUNTY OF	ITEM NO.	SHEET NO.
CAMPBELL	6-2021.00	R276

SLIP RAMP MP A1 ALIGNMENT & COORDINATE INFORMATION

	STATION	NORTHING	EASTING
	ELEMENT: CIRCULAR		
PC	0+00.0000	4287263.1554	5282861.3962
PI	1+70.3224	4287122.2796	5282957.1236
CC		4286295.7397	5281437.7131
PT	3+39.5395	4286965.3747	5283023.3851
RADIUS:		1721.2689	
DELTA:		11°18'08.04"	RIGHT
DEGREE OF CURVATURE(ARC):		3°19'43.30"	
LENGTH:		339.5395	
TANGENT:		170.3224	
CHORD:		338.9893	
MIDDLE ORDINATE:		8.3655	
EXTERNAL:		8.4063	
TANGENT DIRECTION:		S 34°11'48.27"	E
RADIAL DIRECTION:		S 55°48'11.73"	W
CHORD DIRECTION:		S 28°32'44.25"	E
RADIAL DIRECTION:		S 67°06'19.77"	W
TANGENT DIRECTION:		S 22°53'40.23"	E

SLIP RAMP MP A1
P.I. 1+70.32
Δ = 11°18'08" Rt.
C = 3°19'43"
T = 170.32'
L = 339.54'
R = 1721.27'
E = 8.41'
e = MATCH
Runoff = EXIST
Runout = PVMT

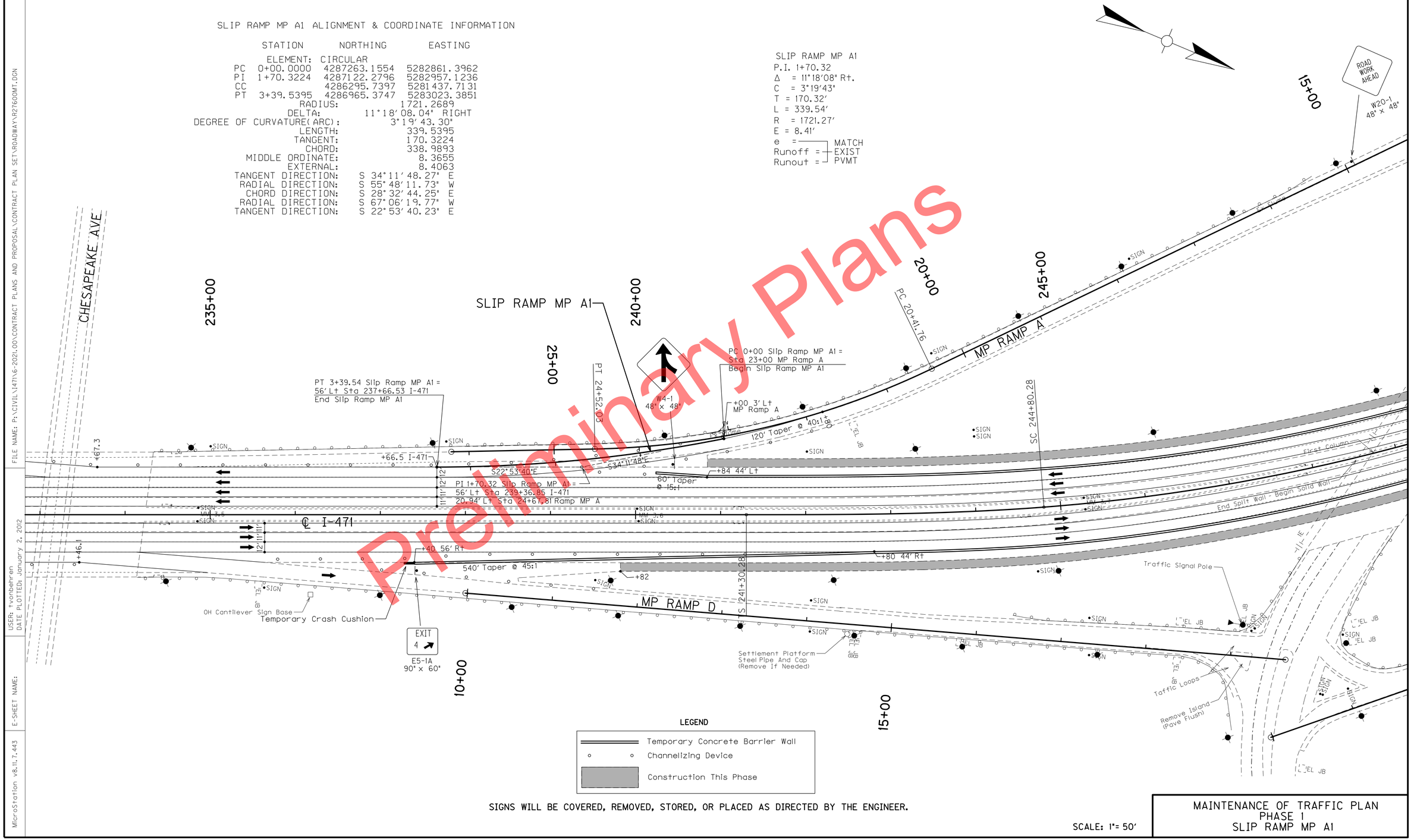

Preliminary Plans

LEGEND

- Temporary Concrete Barrier Wall
- Channelizing Device
- Construction This Phase

SIGNS WILL BE COVERED, REMOVED, STORED, OR PLACED AS DIRECTED BY THE ENGINEER.

SCALE: 1"= 50'

MAINTENANCE OF TRAFFIC PLAN
PHASE 1
SLIP RAMP MP A1

FILE NAME: P:\CIVIL\147\N6-2021.00\CONTRACT PLANS AND PROPOSAL\CONTRACT PLAN SET\ROADWAY\R276OMT.DGN
USER: tvonbehren
DATE PLOTTED: January 2, 2012
E-SHEET NAME:
MicroStation v8.11.7.443

COUNTY OF	ITEM NO.	SHEET NO.
CAMPBELL	6-2021.00	R277

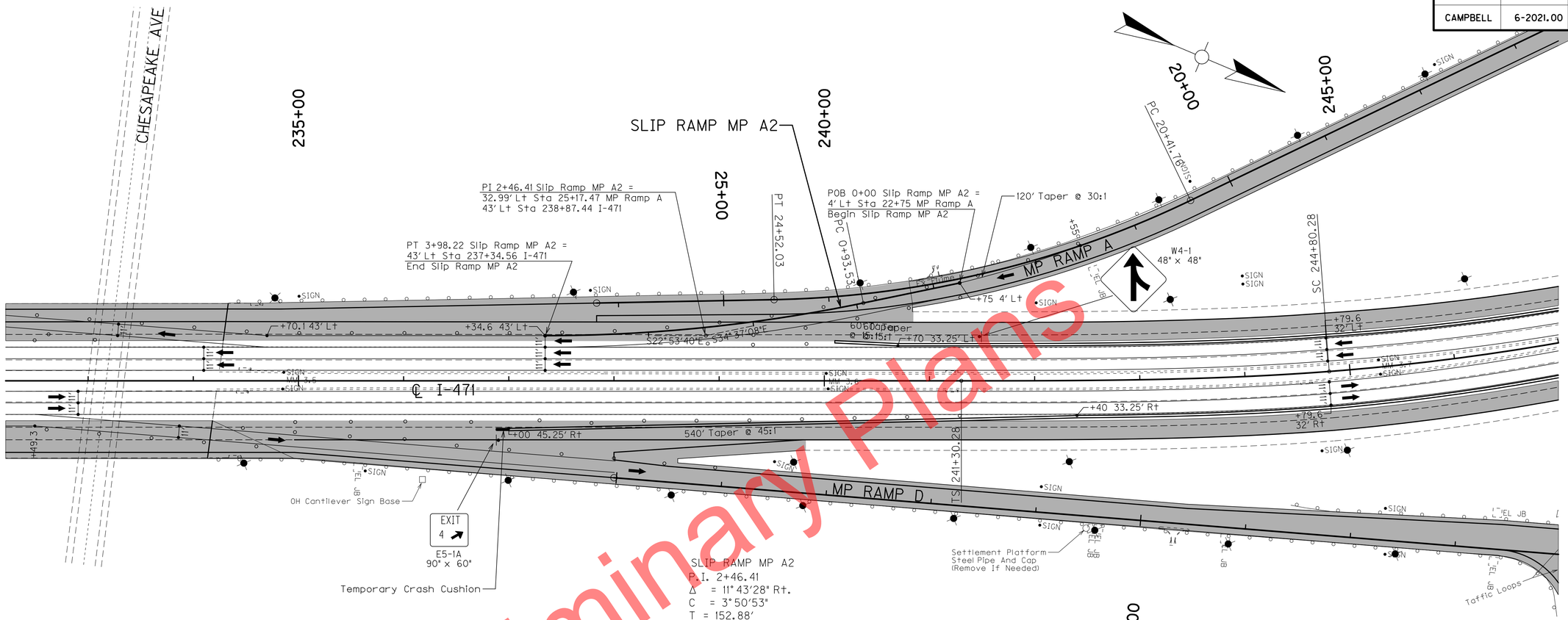

SLIP RAMP MP A2
P.I. 2+46.41
Δ = 11°43'28" Rt.
C = 3°50'53"
T = 152.88'
L = 304.69''
R = 1489'
E = 7.83'
e = MATCH
Runoff = EXIST
Runout = PVMT

NOTE:

Close MP Ramp A2 And Extend The Temporary Barrier Wall Through The Slip Ramp Area To Construct The Portion Of Roadway In That Area. See The Maintenance Of Traffic Notes For Ramp Closure Time. See The Maintenance Of Traffic Typical Sections For Location Of Temporary Barrier Wall.

LEGEND

- Temporary Concrete Barrier Wall
- Channelizing Device
- Construction This Phase

SIGNS WILL BE COVERED, REMOVED, STORED, OR PLACED AS DIRECTED BY THE ENGINEER.

15+00

SLIP RAMP MP A2 ALIGNMENT & COORDINATE INFORMATION

	STATION	NORTHING	EASTING
	ELEMENT: LINEAR		
POB	0+00.0000	4287284.6035	5282848.3316
PC	0+93.5335	4287207.6302	5282901.4693
	TANGENT DIRECTION:	S 34° 37' 07.79" E	
	TANGENT LENGTH:	93.5335	
	ELEMENT: CIRCULAR		
PC	0+93.5335	4287207.6302	5282901.4693
PI	2+46.4129	4287081.8181	5282988.3223
CC		4286361.7080	5281676.0972
PT	3+98.2247	4286940.9821	5283047.7978
	RADIUS:	1489.0000	
	DELTA:	11° 43' 27.56" RIGHT	
	DEGREE OF CURVATURE(ARC):	3° 50' 52.57"	
	LENGTH:	304.6911	
	TANGENT:	152.8794	
	CHORD:	304.1598	
	MIDDLE ORDINATE:	7.7867	
	EXTERNAL:	7.8277	
	TANGENT DIRECTION:	S 34° 37' 07.79" E	
	RADIAL DIRECTION:	S 55° 22' 52.21" W	
	CHORD DIRECTION:	S 28° 45' 24.01" E	
	RADIAL DIRECTION:	S 67° 06' 19.77" W	
	TANGENT DIRECTION:	S 22° 53' 40.23" E	

SCALE: 1"= 50'

MAINTENANCE OF TRAFFIC PLAN
PHASE 3
SLIP RAMP MP A2

Preliminary Plans

FILE NAME: P:\CIVIL\147\N6-2021.00\CONTRACT PLANS AND PROPOSAL\CONTRACT PLAN SET\ROADWAY\R277OMT.DGN
USER: tvonbehren
DATE PLOTTED: January 2, 2012
E-SHEET NAME:
MicroStation v8.11.7.443

COUNTY OF	ITEM NO.	SHEET NO.
CAMPBELL	6-2021.00	R278

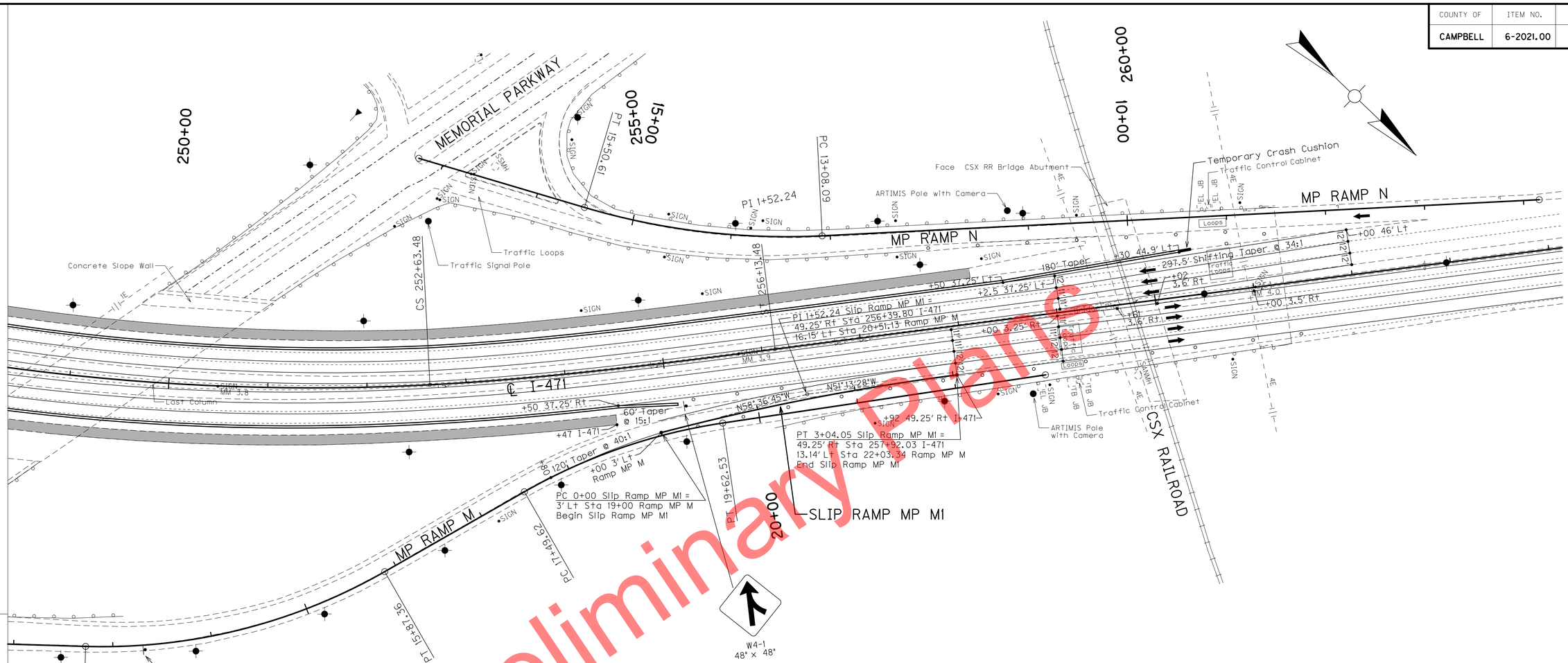

Preliminary Plans

SLIP RAMP MP M1
P.I. 1+52.24
Δ = 7°23'17" Rt.
C = 2°25'48"
T = 152.24'
L = 304.05'
R = 2357.98'
E = 4.91
e = MATCH EXIST PVMT
Runoff =
Runout =

SLIP RAMP MP M1 ALIGNMENT & COORDINATE INFORMATION

	STATION	NORTHING	EASTING
	ELEMENT: CIRCULAR		
PC	0+00.0000	4288464.5974	5282192.6393
PI	1+52.2378	4288543.8862	5282062.6791
CC		4290477.5268	5283420.7292
PT	3+04.0536	4288639.2282	5281943.9936
	RADIUS:	2357.9842	
	DELTA:	7°23'17.11"	RIGHT
	DEGREE OF CURVATURE(ARC):	2°25'47.51"	
	LENGTH:	304.0536	
	TANGENT:	152.2378	
	CHORD:	303.8430	
	MIDDLE ORDINATE:	4.8991	
	EXTERNAL:	4.9093	
	TANGENT DIRECTION:	N 58°36'45.35"	W
	RADIAL DIRECTION:	N 31°23'14.65"	E
	CHORD DIRECTION:	N 54°55'06.80"	W
	RADIAL DIRECTION:	N 38°46'31.76"	E
	TANGENT DIRECTION:	N 51°13'28.24"	W

LEGEND

- Temporary Concrete Barrier Wall
- Channelizing Device
- Construction This Phase

SIGNS WILL BE COVERED, REMOVED, STORED, OR PLACED AS DIRECTED BY THE ENGINEER.

SCALE: 1"= 50'

MAINTENANCE OF TRAFFIC PLAN
PHASE 1
SLIP RAMP MP M1

FILE NAME: P:\CIVIL\147\N6-2021.00\CONTRACT PLANS AND PROPOSAL\CONTRACT PLAN SET\ROADWAY\R278OMT.DGN
USER: tvonbehren
DATE PLOTTED: January 2, 2012
E-SHEET NAME:
MicroStation v8.11.7.443

COUNTY OF	ITEM NO.	SHEET NO.
CAMPBELL	6-2021.00	R279

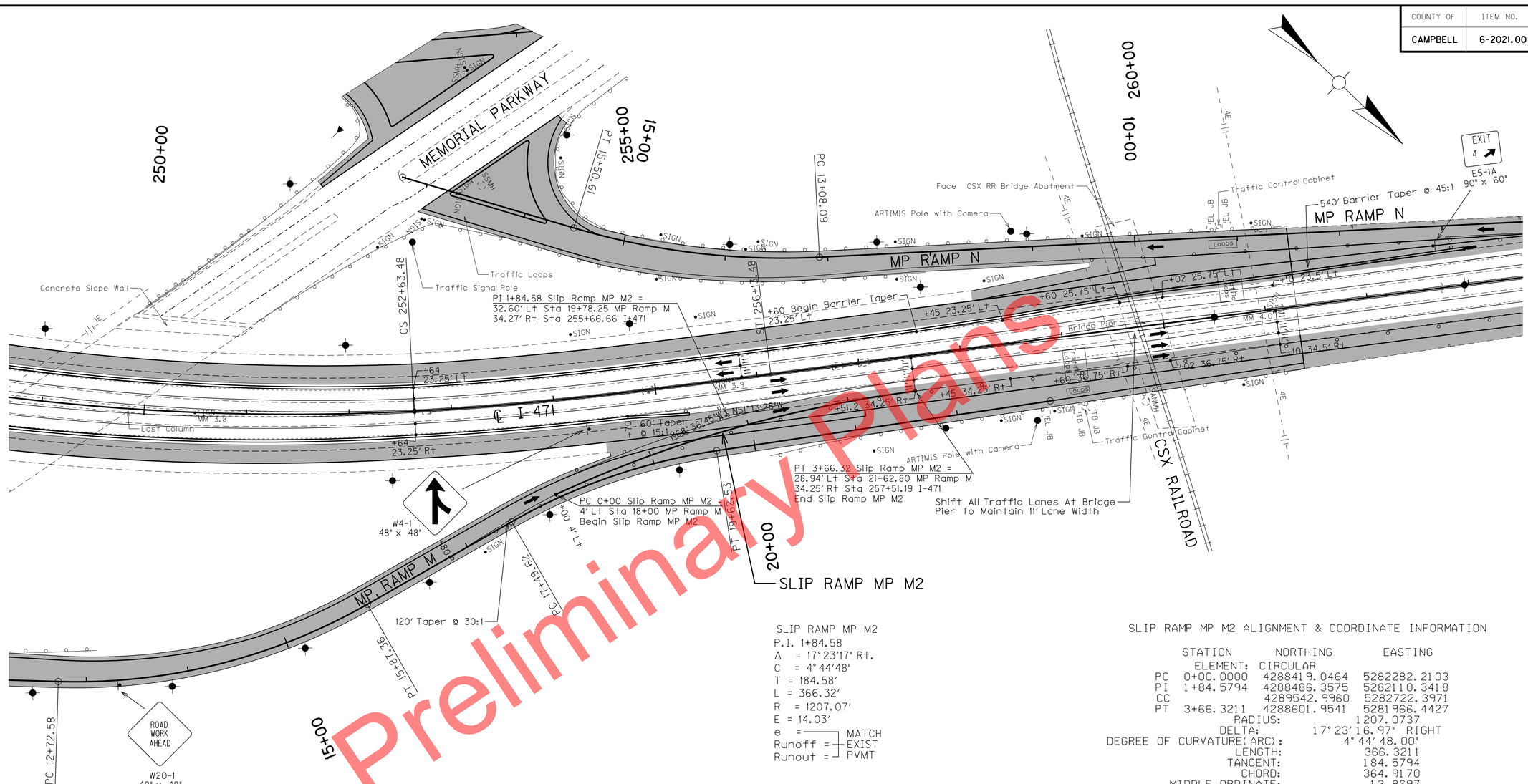

SLIP RAMP MP M2
P.I. 1+84.58
Δ = 17°23'17" Rt.
C = 4°44'48"
T = 184.58'
L = 366.32'
R = 1207.07'
E = 14.03'
e = MATCH EXIST PVMT
Runoff =
Runout =

NOTE:

Close MP Ramp M2 And Extend The Temporary Barrier Wall Through The Slip Ramp Area To Construct The Portion Of Roadway In That Area. See The Maintenance Of Traffic Notes For Ramp Closure Time. See The Maintenance Of Traffic Typical Sections For Location Of Temporary Barrier Wall.

SLIP RAMP MP M2 ALIGNMENT & COORDINATE INFORMATION

	STATION	NORTHING	EASTING
	ELEMENT:	CIRCULAR	
PC	0+00.0000	428841 9.0464	5282282.2103
PI	1+84.5794	4288486.3575	5282110.3418
CC		4289542.9960	5282722.3971
PT	3+66.3211	4288601.9541	5281966.4427
	RADIUS:	1207.0737	
	DELTA:	17° 23' 16.97"	RIGHT
DEGREE OF CURVATURE(ARC):		4° 44' 48.00"	
	LENGTH:	366.3211	
	TANGENT:	184.5794	
	CHORD:	364.9170	
MIDDLE ORDINATE:		13.8697	
	EXTERNAL:	14.0309	
TANGENT DIRECTION:		N 68° 36' 45.21"	W
RADIAL DIRECTION:		N 21° 23' 14.79"	E
CHORD DIRECTION:		N 59° 55' 06.73"	W
RADIAL DIRECTION:		N 38° 46' 31.76"	E
TANGENT DIRECTION:		N 51° 13' 28.24"	W

LEGEND

- Temporary Concrete Barrier Wall
- Channelizing Device
- Construction This Phase

SIGNS WILL BE COVERED, REMOVED, STORED, OR PLACED AS DIRECTED BY THE ENGINEER.

SCALE: 1"= 50'

MAINTENANCE OF TRAFFIC PLAN
PHASE 3
SLIP RAMP MP M2

Preliminary Plans

MicroStation v8.11.7.443
E-SHEET NAME:
USER: tvanbehren
DATE PLOTTED: January 2, 2012
FILE NAME: P:\CIVIL\147\N6-2021.00\CONTRACT PLANS AND PROPOSAL\CONTRACT PLAN SET\ROADWAY\R279OMT.DGN

COUNTY OF	ITEM NO.	SHEET NO.
CAMPBELL	6-2021.00	R280

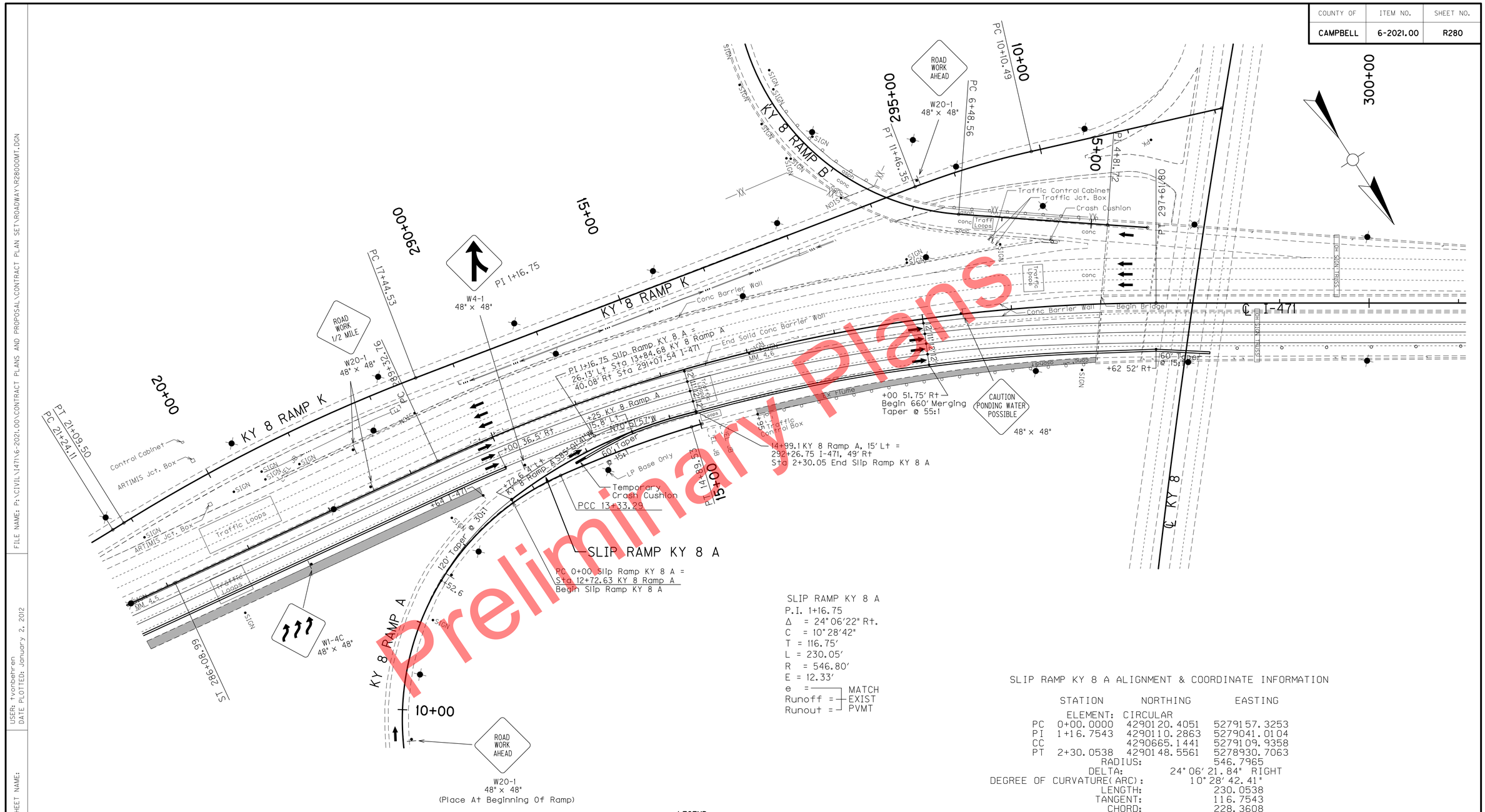

SLIP RAMP KY 8 A
P.I. 1+16.75
Δ = 24°06'22" Rt.
C = 10°28'42"
T = 116.75'
L = 230.05'
R = 546.80'
E = 12.33'
e = MATCH EXIST PVMT
Runoff =
Runout =

SLIP RAMP KY 8 A ALIGNMENT & COORDINATE INFORMATION

	STATION	NORTHING	EASTING
	ELEMENT:	CIRCULAR	
PC	0+00.0000	4290120.4051	5279157.3253
PI	1+16.7543	4290110.2863	5279041.0104
CC		4290665.1441	5279109.9358
PT	2+30.0538	4290148.5561	5278930.7063
	RADIUS:	546.7965	
	DELTA:	24°06'21.84"	RIGHT
DEGREE OF CURVATURE(ARC):		10°28'42.41"	
	LENGTH:	230.0538	
	TANGENT:	116.7543	
	CHORD:	228.3608	
	MIDDLE ORDINATE:	12.0543	
	EXTERNAL:	12.3260	
TANGENT DIRECTION:		S 85°01'41.06"	W
RADIAL DIRECTION:		N 4°58'18.94"	W
CHORD DIRECTION:		N 82°55'08.02"	W
RADIAL DIRECTION:		N 19°08'02.90"	E
TANGENT DIRECTION:		N 70°51'57.10"	W

LEGEND

- Temporary Concrete Barrier Wall
- Channelizing Device
- Construction This Phase

SIGNS WILL BE COVERED, REMOVED, STORED, OR PLACED AS DIRECTED BY THE ENGINEER.

SCALE: 1"= 50'

MAINTENANCE OF TRAFFIC PLAN
PHASE 1
SLIP RAMP KY 8 A

MicroStation v8.11.7.443
E-SHEET NAME:
USER: tvonbehren
DATE PLOTTED: January 2, 2012
FILE NAME: P:\CIVIL\147N6-2021.00\CONTRACT PLANS AND PROPOSAL\CONTRACT PLAN SET\ROADWAY\R280GMT.DGN

COUNTY OF	ITEM NO.	SHEET NO.
CAMPBELL	6-2021.00	R281

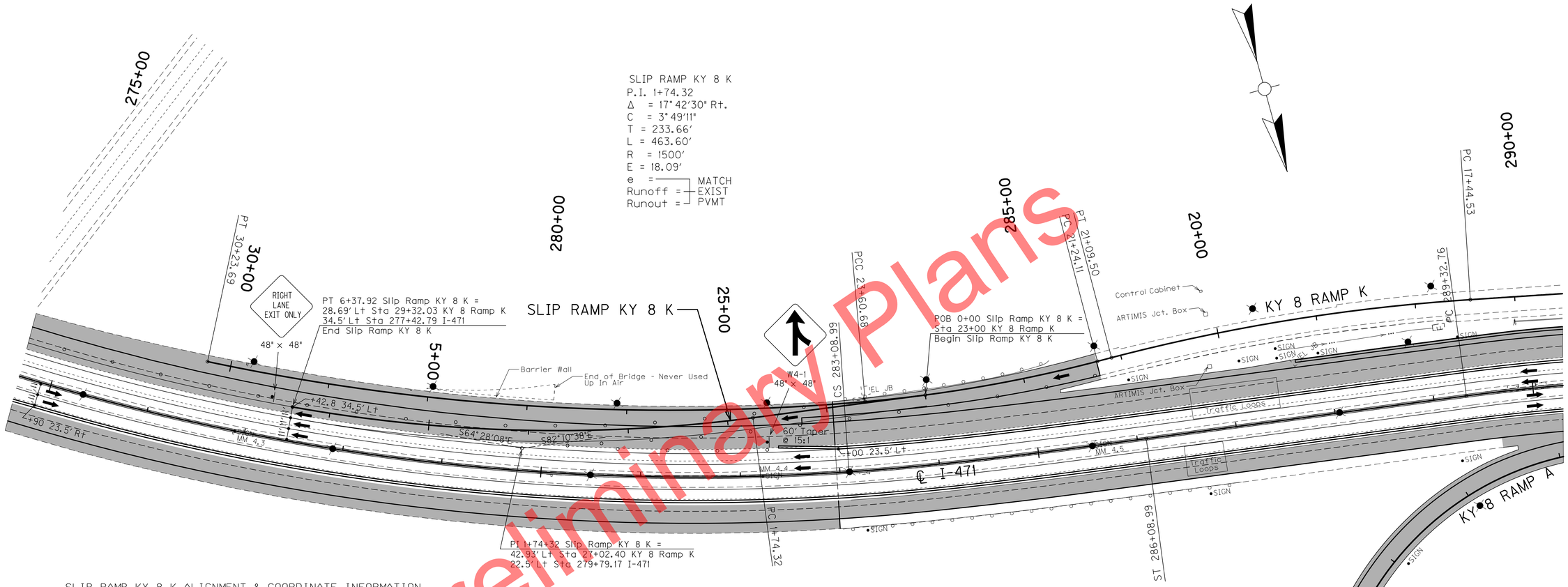

Preliminary Plans

SLIP RAMP KY 8 K ALIGNMENT & COORDINATE INFORMATION

	STATION	NORTHING	EASTING
	ELEMENT: LINEAR		
POB	0+00.0000	4289895.6195	5279726.7359
PC	1+74.3167	4289871.8933	5279899.4304
	TANGENT DIRECTION:	S 82°10'37.87" E	
	TANGENT LENGTH:	174.3167	
	ELEMENT: CIRCULAR		
PC	1+74.3167	4289871.8933	5279899.4304
PI	4+07.9796	4289840.0894	5280130.9187
CC		4288385.8527	5279695.2652
PT	6+37.9165	4289739.3808	5280341.7649
	RADIUS:	1500.0000	
	DELTA:	17°42'29.55" RIGHT	
	DEGREE OF CURVATURE(ARC):	3°49'10.99"	
	LENGTH:	463.5998	
	TANGENT:	233.6629	
	CHORD:	461.7569	
	MIDDLE ORDINATE:	17.8748	
	EXTERNAL:	18.0904	
	TANGENT DIRECTION:	S 82°10'37.87" E	
	RADIAL DIRECTION:	S 7°49'22.13" W	
	CHORD DIRECTION:	S 73°19'23.09" E	
	RADIAL DIRECTION:	S 25°31'51.69" W	
	TANGENT DIRECTION:	S 64°28'08.31" E	

NOTE:

Close KY 8 Ramp K And Extend The Temporary Barrier Wall Through The Slip Ramp Area To Construct The Portion Of Roadway In That Area. See The Maintenance Of Traffic Notes For Ramp Closure Time. See The Maintenance Of Traffic Typical Sections For Location Of Temporary Barrier Wall.

LEGEND

- Temporary Concrete Barrier Wall
- Channelizing Device
- Construction This Phase

SIGNS WILL BE COVERED, REMOVED, STORED, OR PLACED AS DIRECTED BY THE ENGINEER.

SCALE: 1"= 50'

MAINTENANCE OF TRAFFIC PLAN
PHASE 3
SLIP RAMP KY 8 K

FILE NAME: P:\CIVIL\147IN6-2021.00\CONTRACT PLANS AND PROPOSAL\CONTRACT PLAN SET\ROADWAY\R281OOMT.DGN
USER: tvonbehren
DATE PLOTTED: January 2, 2012
E-SHEET NAME:
MicroStation v8.11.7.443

COUNTY OF	ITEM NO.	SHEET NO.
CAMPBELL	6-2021.00	R282

Portable Changeable Message Signs At ½ Mile And 1 Mile Prior To I-275 Ramp A With Message "EXIT 1B TO I-275 WB CLOSED, USE DETOUR EXIT 1A" Or As Directed By The Engineer.

NOTES:

TWO PORTABLE CHANGEABLE MESSAGE SIGNS ARE TO BE PLACED ON I-71 IN OHIO WARNING OF NO DIRECT ACCESS TO I-275 WB FROM I-471 SB. LOCATIONS TO BE DIRECTED BY THE ENGINEER.

WHEN AN EXIT RAMP IS CLOSED, AN "EXIT CLOSED" SIGN PANEL WITH A BLACK LEGEND AND BORDER ON AN ORANGE BACKGROUND SHOULD BE PLACED DIAGONALLY ACROSS THE INTERCHANGE/INTERSECTION GUIDE SIGNS. (SEE PG. 592 OF THE 2009 M.U.T.C.D.)

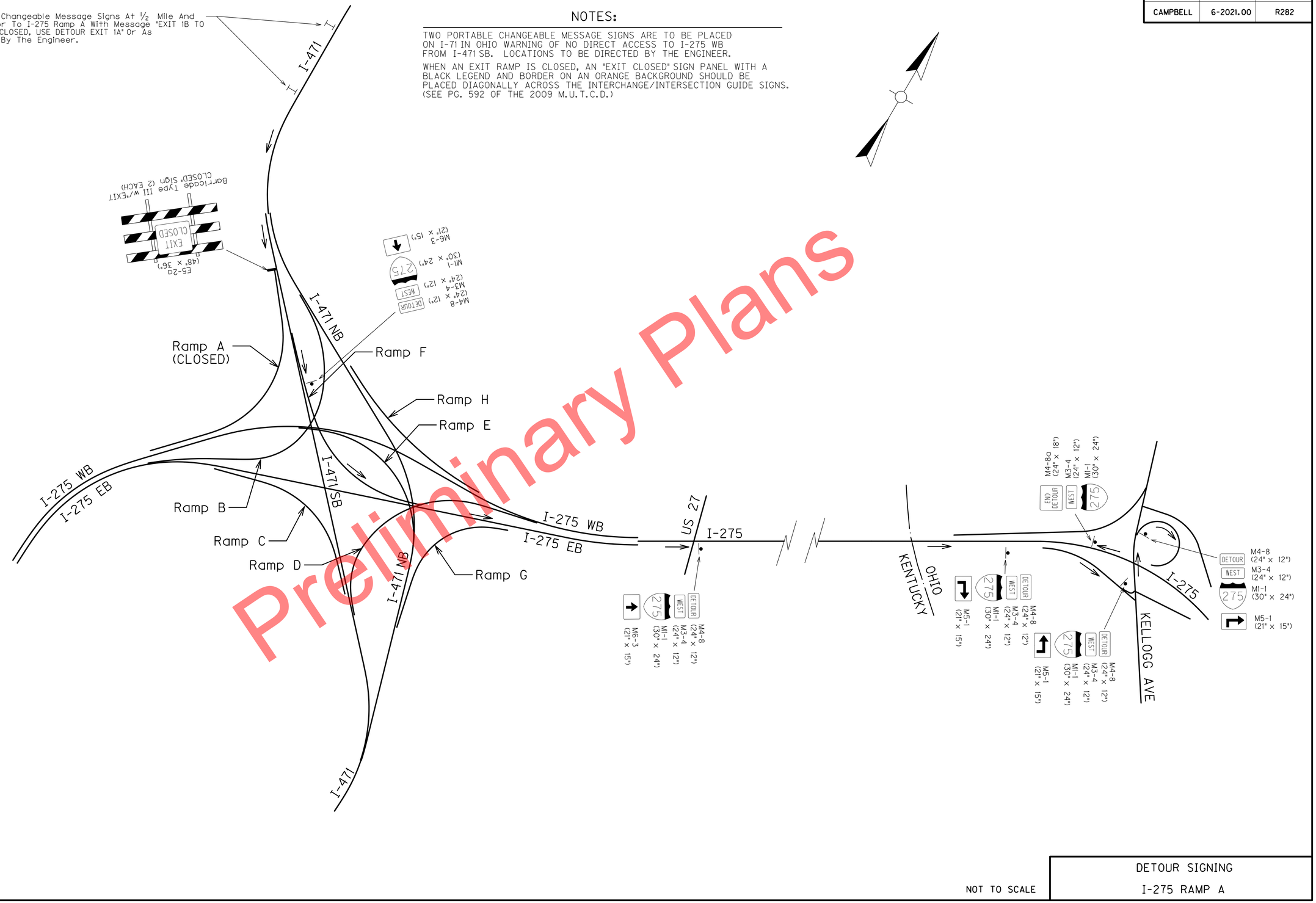

Preliminary Plans

NOT TO SCALE

DETOUR SIGNING

I-275 RAMP A

MicroStation v8.11.7.443
E-SHEET NAME:
USER: tvonbehren
DATE PLOTTED: January 2, 2012
FILE NAME: P:\CIVIL\147IN6-2021.00\CONTRACT PLANS AND PROPOSAL\CONTRACT PLAN SET\ROADWAY\R282DOMT.DGN

COUNTY OF	ITEM NO.	SHEET NO.
CAMPBELL	6-2021.00	R283

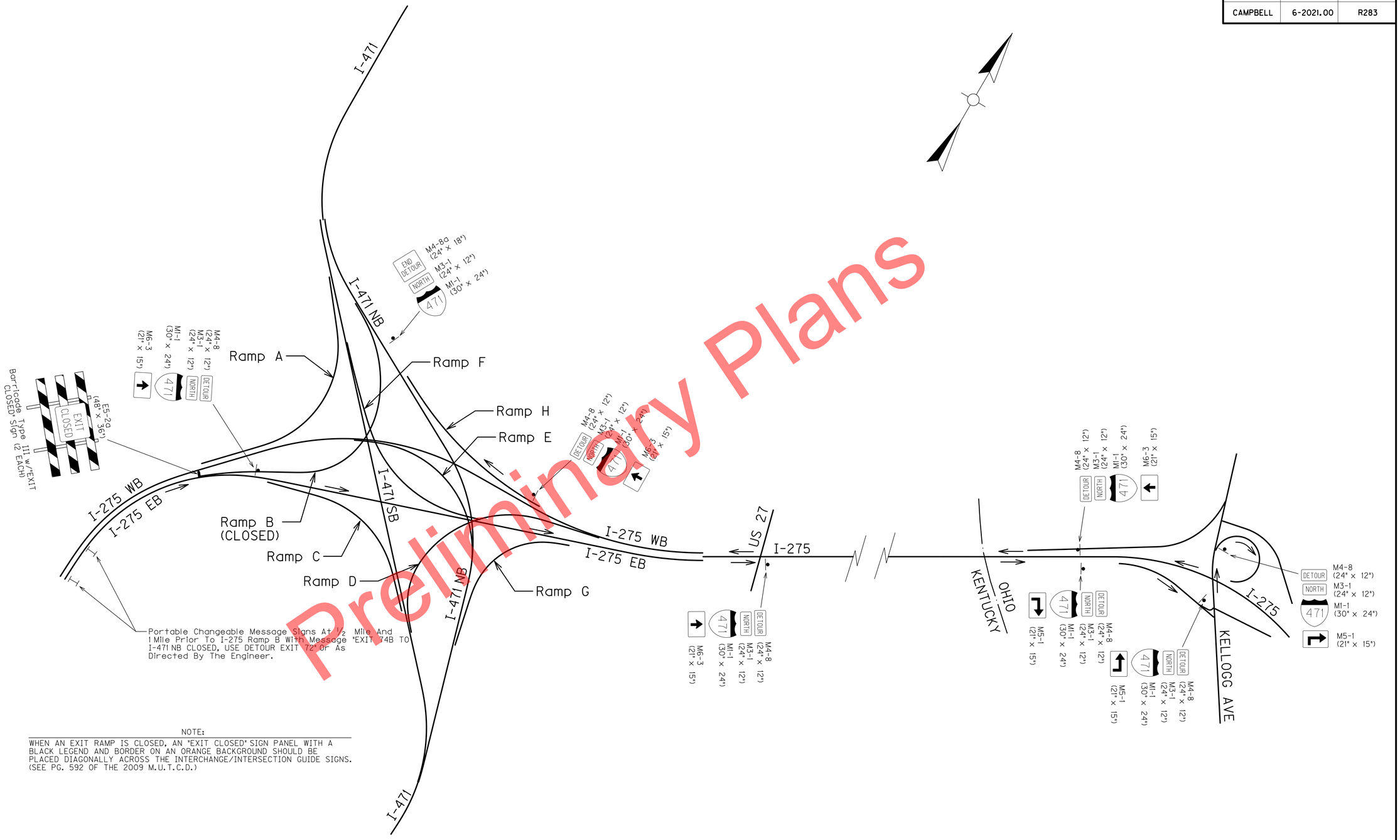

Preliminary Plans

NOTE:

WHEN AN EXIT RAMP IS CLOSED, AN "EXIT CLOSED" SIGN PANEL WITH A BLACK LEGEND AND BORDER ON AN ORANGE BACKGROUND SHOULD BE PLACED DIAGONALLY ACROSS THE INTERCHANGE/INTERSECTION GUIDE SIGNS. (SEE PG. 592 OF THE 2009 M.U.T.C.D.)

NOT TO SCALE

DETOUR SIGNING

I-275 RAMP B

FILE NAME: P:\CIVIL\471\6-2021.00\CONTRACT PLANS AND PROPOSAL\CONTRACT PLAN SET\ROADWAY\R283GOMT.DGN
USER: tvonbehren
DATE PLOTTED: January 2, 2012
E-SHEET NAME:
MicroStation v8.11.7.443

COUNTY OF	ITEM NO.	SHEET NO.
CAMPBELL	6-2021.00	R284

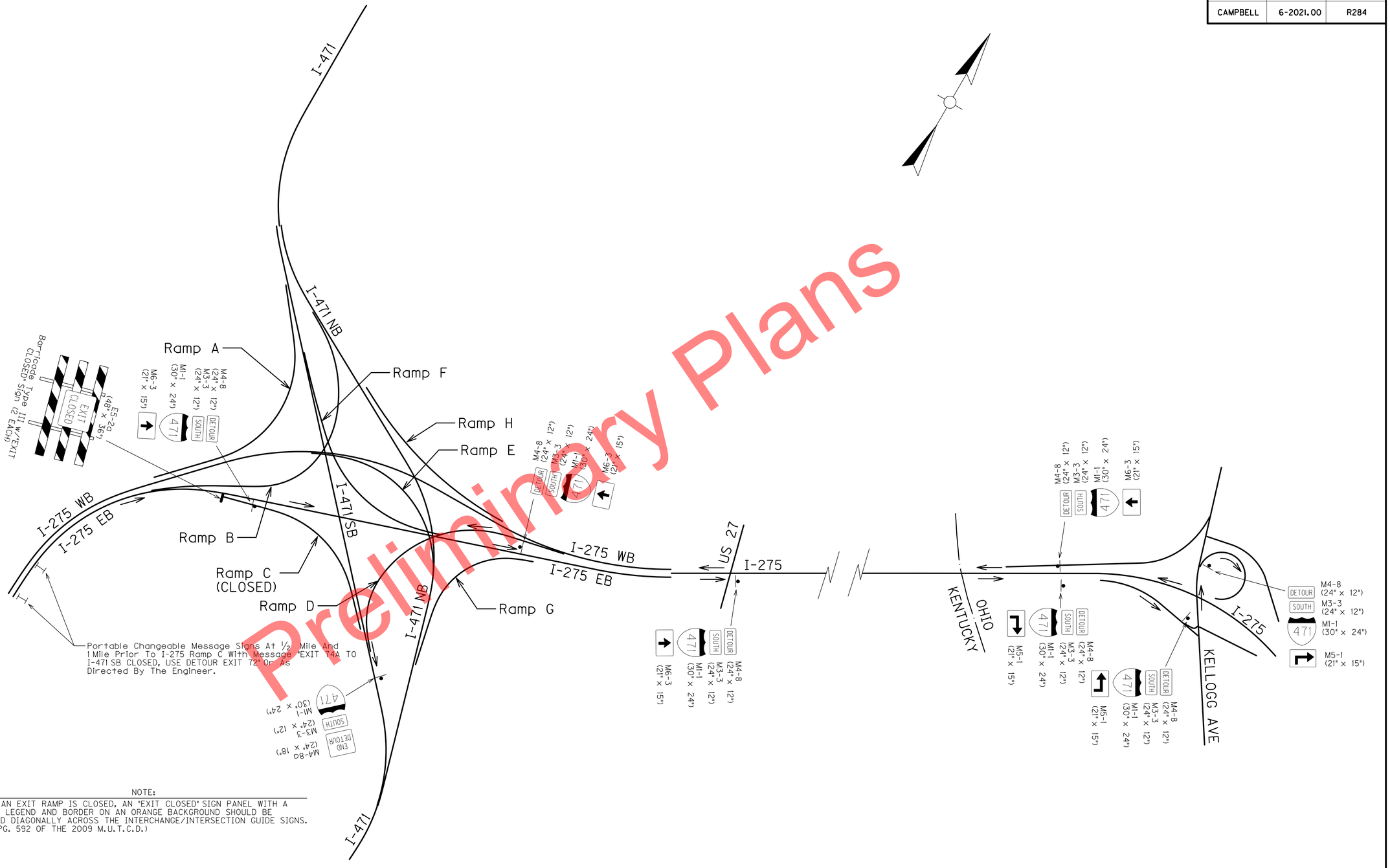

NOTE:

WHEN AN EXIT RAMP IS CLOSED, AN "EXIT CLOSED" SIGN PANEL WITH A BLACK LEGEND AND BORDER ON AN ORANGE BACKGROUND SHOULD BE PLACED DIAGONALLY ACROSS THE INTERCHANGE/INTERSECTION GUIDE SIGNS. (SEE PG. 592 OF THE 2009 M.U.T.C.D.)

Preliminary Plans

NOT TO SCALE

DETOUR SIGNING

I-275 RAMP C

MicroStation v8.11.7.443
E-SHEET NAME:
USER: tvonbehren
DATE PLOTTED: January 2, 2012
FILE NAME: P:\CIVIL\471\6-2021.00\CONTRACT PLANS AND PROPOSAL\CONTRACT PLAN SET\ROADWAY\R284OMT.DGN

COUNTY OF	ITEM NO.	SHEET NO.
CAMPBELL	6-2021.00	R285

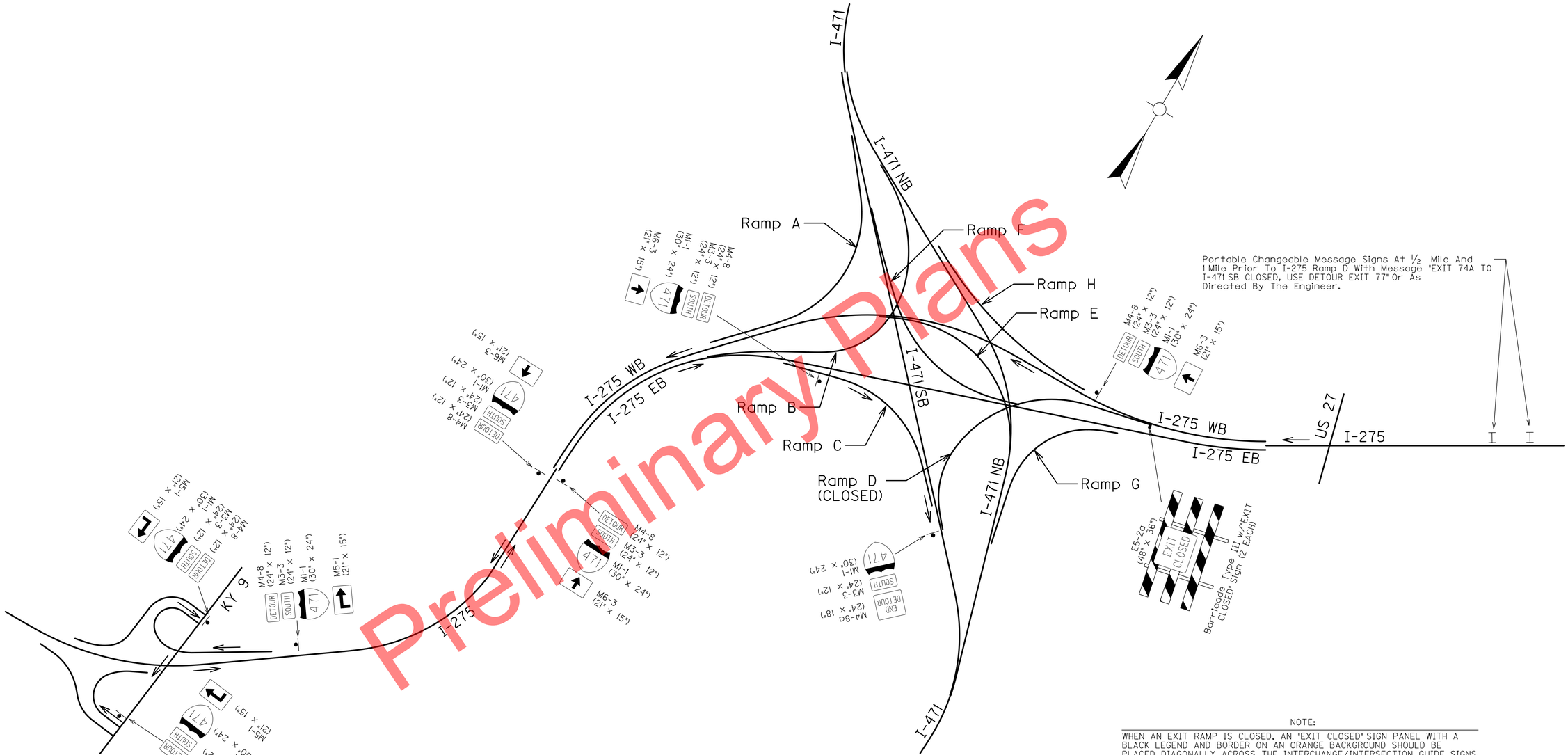

Preliminary Plans

NOTE:

WHEN AN EXIT RAMP IS CLOSED, AN "EXIT CLOSED" SIGN PANEL WITH A BLACK LEGEND AND BORDER ON AN ORANGE BACKGROUND SHOULD BE PLACED DIAGONALLY ACROSS THE INTERCHANGE/INTERSECTION GUIDE SIGNS. (SEE PG. 592 OF THE 2009 M.U.T.C.D.)

NOT TO SCALE

DETOUR SIGNING
I-275 RAMP D

FILE NAME: P:\CIVIL\147\N6-2021.00\CONTRACT PLANS AND PROPOSAL\CONTRACT PLAN SET\ROADWAY\R285GOMT.DGN
USER: tvonbehren
DATE PLOTTED: January 2, 2012
E-SHEET NAME:
MicroStation v8.11.7.443

COUNTY OF	ITEM NO.	SHEET NO.
CAMPBELL	6-2021.00	R286

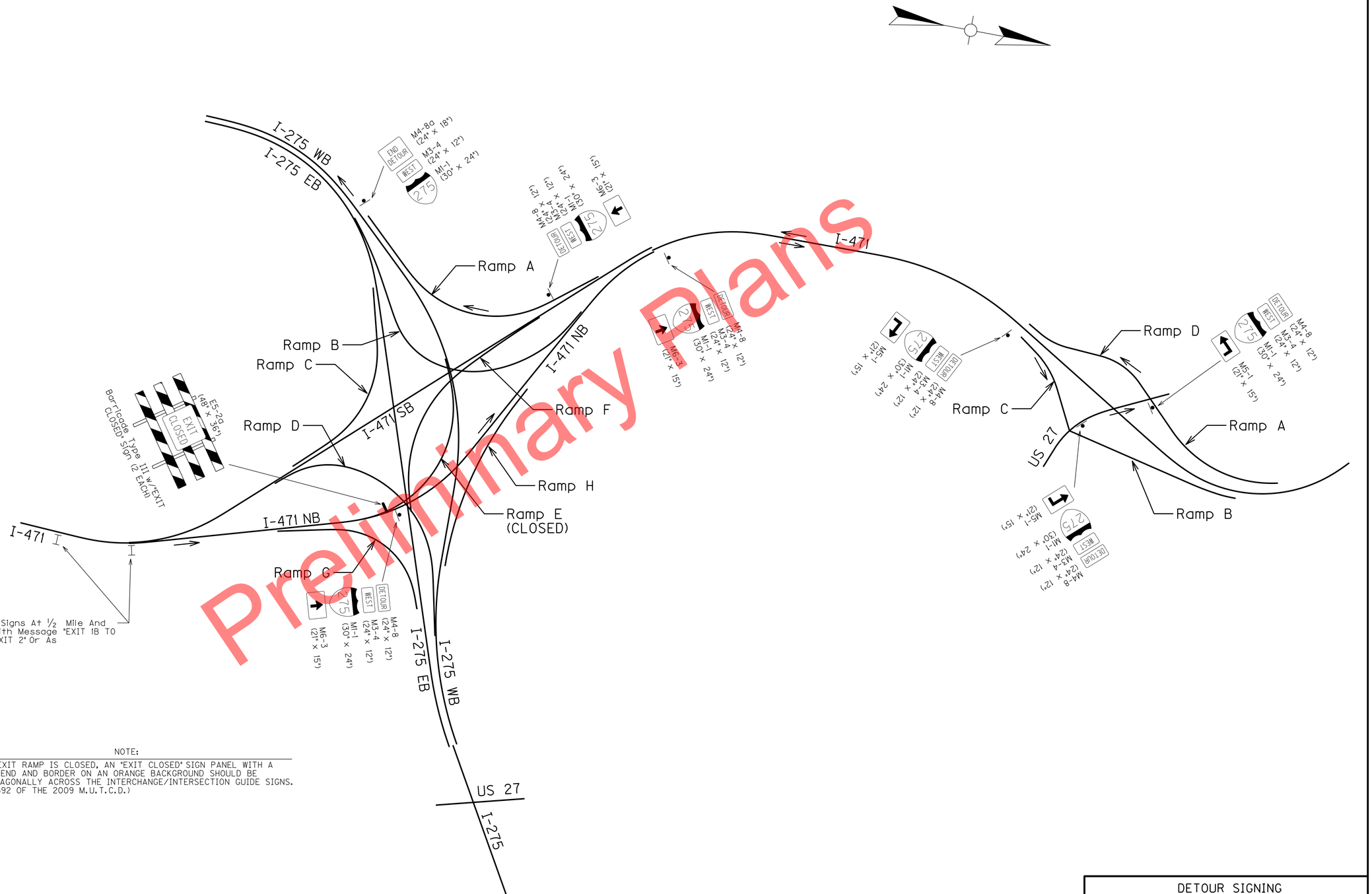

Portable Changeable Message Signs At ½ Mile And 1 Mile Prior To I-275 Ramp E With Message "EXIT 1B TO I-275 WB CLOSED, USE DETOUR EXIT 2" Or As Directed By The Engineer.

NOTE:

WHEN AN EXIT RAMP IS CLOSED, AN "EXIT CLOSED" SIGN PANEL WITH A BLACK LEGEND AND BORDER ON AN ORANGE BACKGROUND SHOULD BE PLACED DIAGONALLY ACROSS THE INTERCHANGE/INTERSECTION GUIDE SIGNS. (SEE PG. 592 OF THE 2009 M.U.T.C.D.)

Preliminary Plans

NOT TO SCALE

DETOUR SIGNING

I-275 RAMP E

FILE NAME: P:\CIVIL\147\N6-2021.00\CONTRACT PLANS AND PROPOSAL\CONTRACT PLAN SET\ROADWAY\R286GOMT.DGN
USER: tvonbehren
DATE PLOTTED: January 2, 2012
E-SHEET NAME:
MicroStation v8.11.7.443

COUNTY OF	ITEM NO.	SHEET NO.
CAMPBELL	6-2021.00	R287

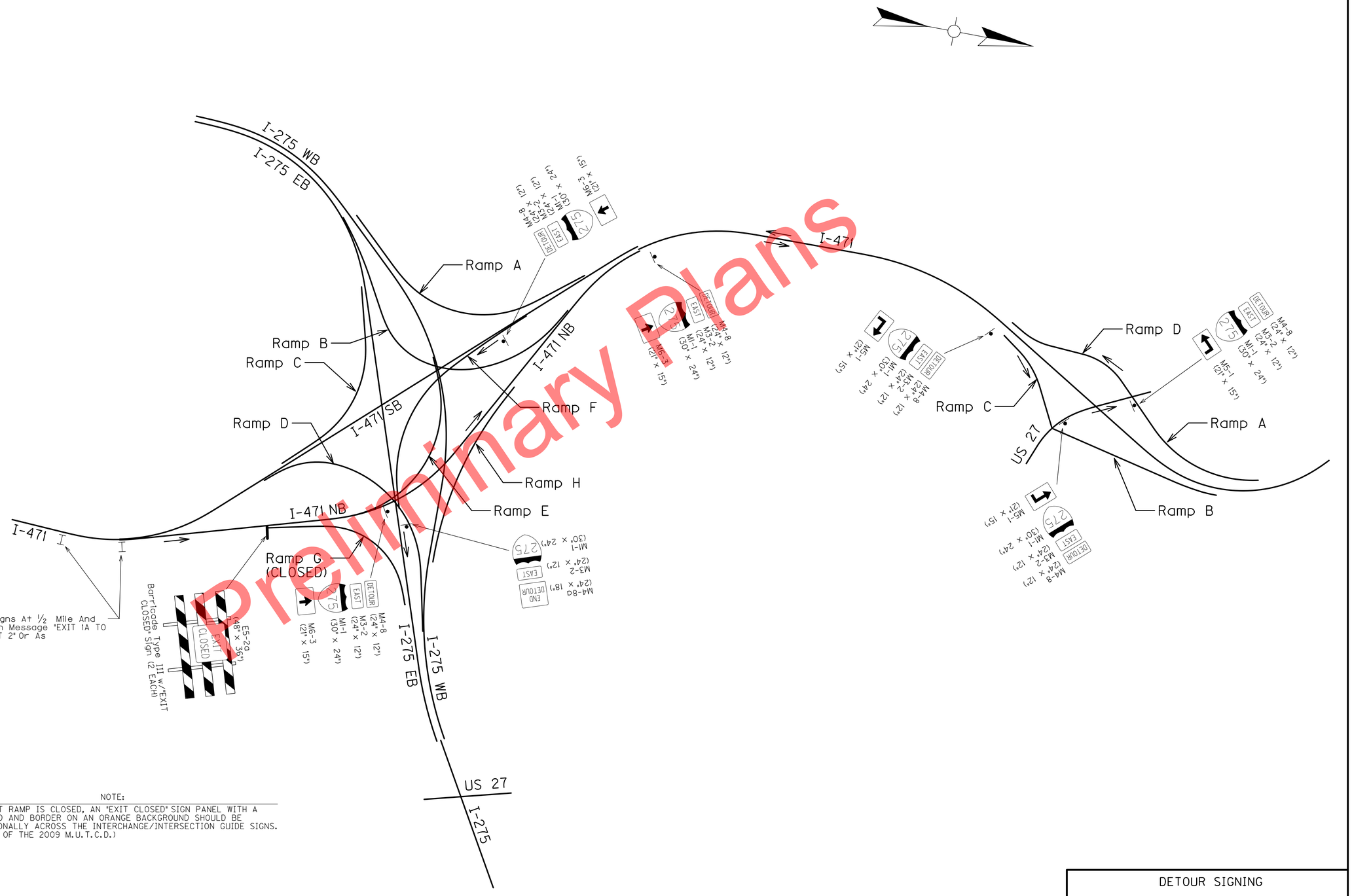

Preliminary Plans

NOTE:

WHEN AN EXIT RAMP IS CLOSED, AN "EXIT CLOSED" SIGN PANEL WITH A BLACK LEGEND AND BORDER ON AN ORANGE BACKGROUND SHOULD BE PLACED DIAGONALLY ACROSS THE INTERCHANGE/INTERSECTION GUIDE SIGNS. (SEE PG. 592 OF THE 2009 M.U.T.C.D.)

NOT TO SCALE

DETOUR SIGNING
I-275 RAMP G

MicroStation v8.11.7.443
E-SHEET NAME:
USER: tvonbehren
DATE PLOTTED: January 2, 2012
FILE NAME: P:\CIVIL\147IN6-2021.00\CONTRACT PLANS AND PROPOSAL\CONTRACT PLAN SET\ROADWAY\R287GOMT.DGN

COUNTY OF	ITEM NO.	SHEET NO.
CAMPBELL	6-2021.00	R288

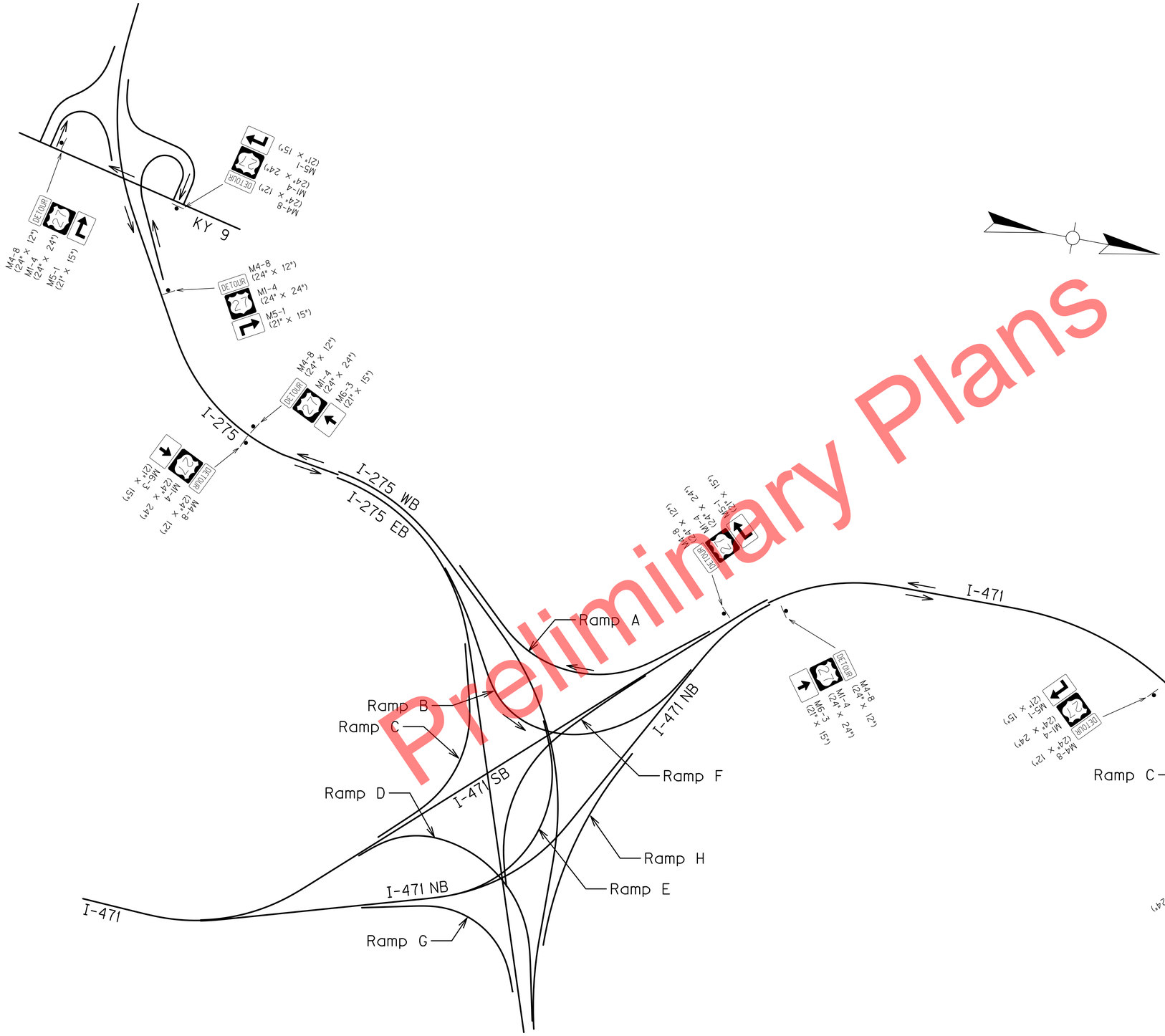

NOTE:

WHEN AN EXIT RAMP IS CLOSED, AN "EXIT CLOSED" SIGN PANEL WITH A BLACK LEGEND AND BORDER ON AN ORANGE BACKGROUND SHOULD BE PLACED DIAGONALLY ACROSS THE INTERCHANGE/INTERSECTION GUIDE SIGNS. (SEE PG. 592 OF THE 2009 M.U.T.C.D.)

Portable Changeable Message Signs At ½ Mile And 1 Mile Prior To US 27 Ramp A With Message "EXIT 2 TO US 27 CLOSED, USE DETOUR EXIT 1B" Or As Directed By The Engineer.

Preliminary Plans

NOT TO SCALE

DETOUR SIGNING

US 27 RAMP A

MicroStation v8.11.7.443
E-SHEET NAME:
USER: tvonbehren
DATE PLOTTED: January 2, 2012
FILE NAME: P:\CIVIL\147\N6-2021.00\CONTRACT PLANS AND PROPOSAL\CONTRACT PLAN SET\ROADWAY\R288GMT.DGN

COUNTY OF	ITEM NO.	SHEET NO.
CAMPBELL	6-2021.00	R289

Place Portable Changeable Message Sign For US 27 Southbound Traffic Prior To Highland Ave With Message "Entrance To I-471 NB Closed Ahead", Or As Directed By The Engineer.

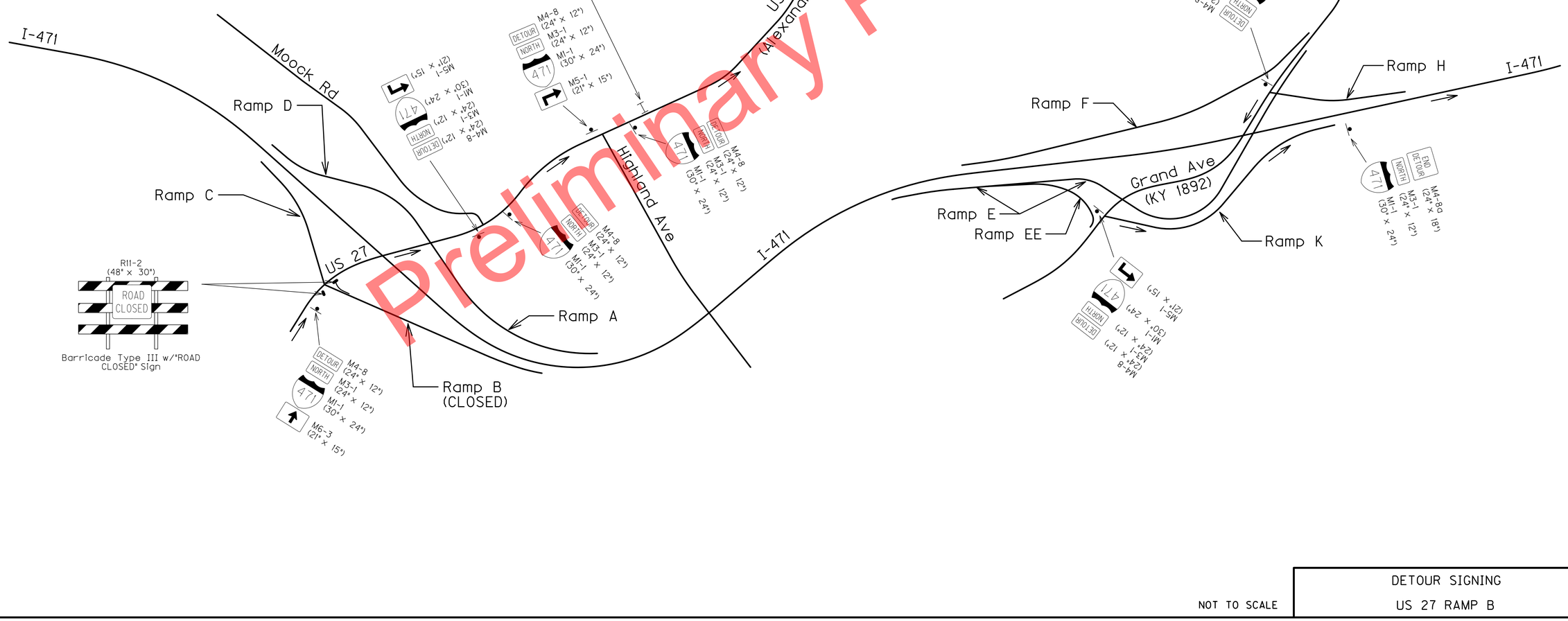

Preliminary Plans

NOT TO SCALE

DETOUR SIGNING
US 27 RAMP B

MicroStation v8.11.7.443
E-SHEET NAME:
USER: tvonbehren
DATE PLOTTED: January 2, 2012
FILE NAME: P:\CIVIL\471N\6-2021.00\CONTRACT PLANS AND PROPOSAL\CONTRACT PLAN SET\ROADWAY\R289GMT.DGN

COUNTY OF	ITEM NO.	SHEET NO.
CAMPBELL	6-2021.00	R290

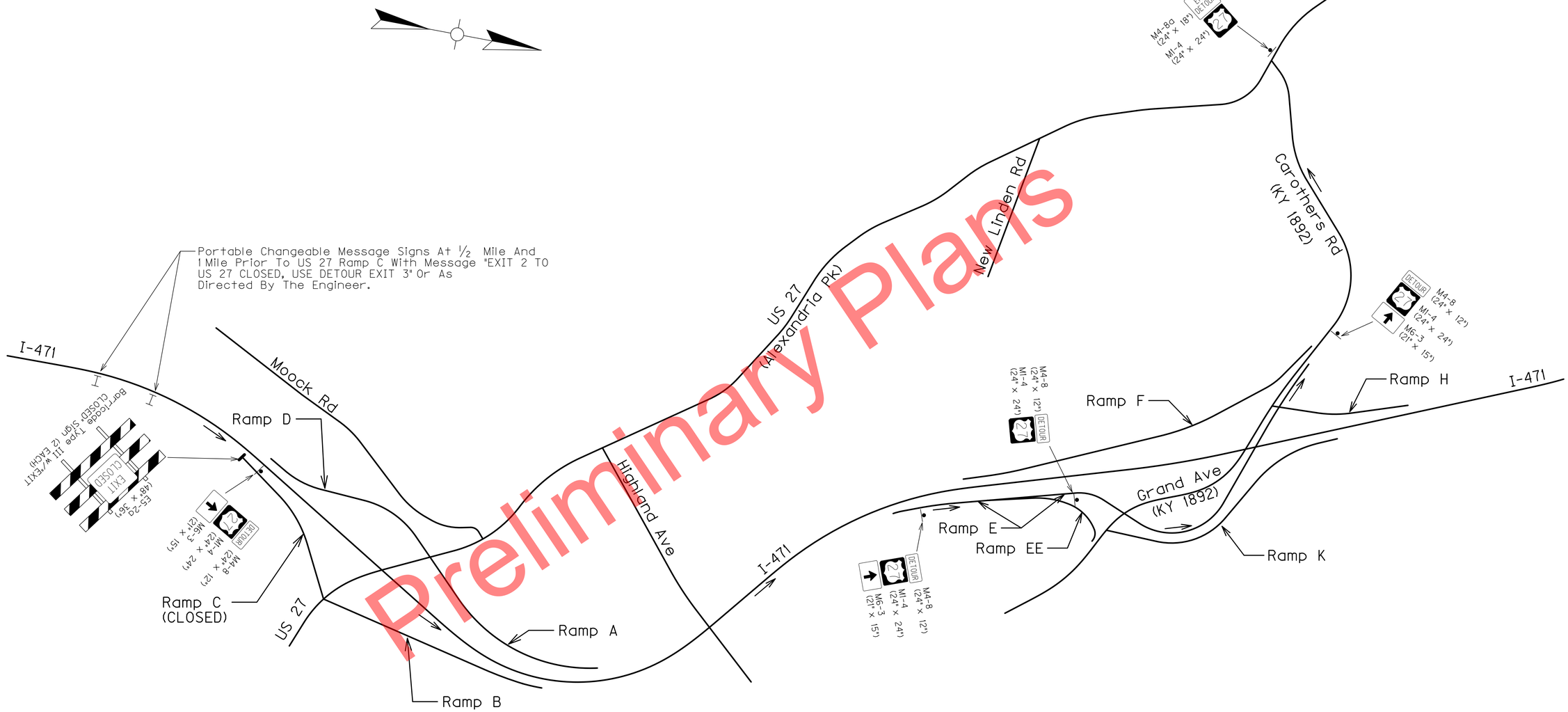

NOTE:

WHEN AN EXIT RAMP IS CLOSED, AN "EXIT CLOSED" SIGN PANEL WITH A BLACK LEGEND AND BORDER ON AN ORANGE BACKGROUND SHOULD BE PLACED DIAGONALLY ACROSS THE INTERCHANGE/INTERSECTION GUIDE SIGNS. (SEE PG. 592 OF THE 2009 M.U.T.C.D.)

NOT TO SCALE

DETOUR SIGNING

US 27 RAMP C

MicroStation v8.11.7.443
E-SHEET NAME:
USER: tvonbehren
DATE PLOTTED: January 2, 2012
FILE NAME: P:\CIVIL\I471\6-2021.00\CONTRACT PLANS AND PROPOSAL\CONTRACT PLAN SET\ROADWAY\R290OOMT.DGN

COUNTY OF	ITEM NO.	SHEET NO.
CAMPBELL	6-2021.00	R291

Place Portable Changeable Message Sign For US 27 Southbound Traffic Prior To Highland Ave With Message "Entrance To I-471 SB Closed Ahead", Or As Directed By The Engineer.

R11-2 (48" x 30")
ROAD CLOSED
Barricade Type III w/"ROAD CLOSED" Sign

I-471
Moock Rd
Ramp D (CLOSED)
Ramp C
US 27
Ramp A
Ramp B
Highland Ave
US 27 (Alexandria Pk)
New Linden Rd
US 27
Carothers Rd (KY 1892)
Ramp F
Ramp H
I-471
Ramp E
Ramp EE
Grand Ave (KY 1892)
Ramp K

DETOUR SOUTH 471 M4-8 (24" x 12") M3-3 (24" x 12") M1-1 (30" x 24") M5-1 (21" x 15")
DETOUR SOUTH 471 M6-3 (21" x 15")
END DETOUR SOUTH 471 M4-8a (24" x 18") M3-3 (24" x 12") M1-1 (30" x 24")
DETOUR SOUTH 471 M1-1 (30" x 24") M3-3 (24" x 12") M4-8 (24" x 12")

Preliminary Plans

NOT TO SCALE

DETOUR SIGNING
US 27 RAMP D

MicroStation v8.11.7.443
E-SHEET NAME:
USER: tvonbehren
DATE PLOTTED: January 2, 2012
FILE NAME: P:\CIVIL\471\6-2021.00\CONTRACT PLANS AND PROPOSAL\CONTRACT PLAN SET\ROADWAY\R291OOMT.DGN

COUNTY OF	ITEM NO.	SHEET NO.
CAMPBELL	6-2021.00	R292

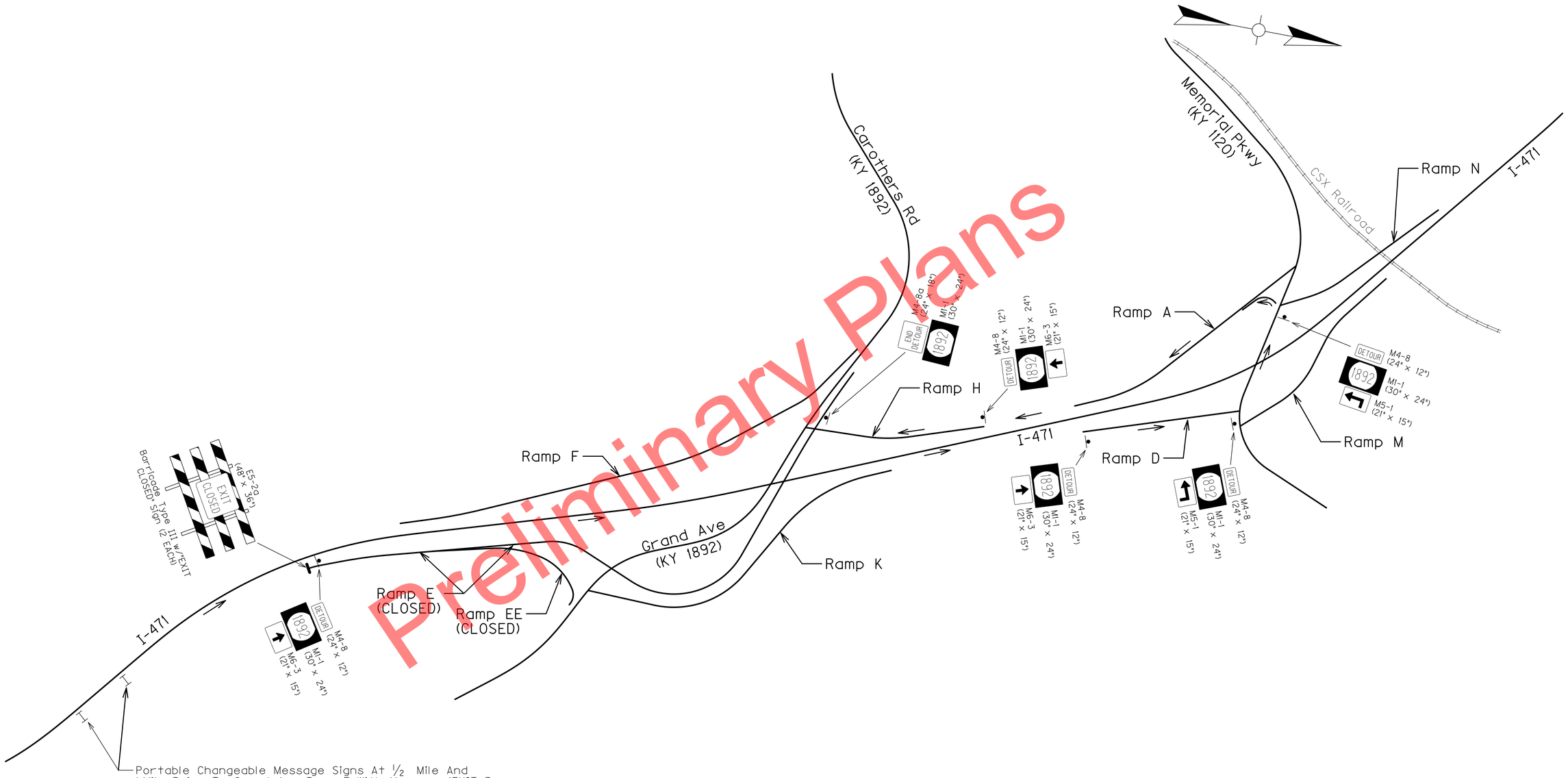

Portable Changeable Message Signs At ½ Mile And 1 Mile Prior To Grand Ave Ramp E With Message "EXIT 3 TO GRAND AVE CLOSED, USE DETOUR EXIT 4" Or As Directed By The Engineer.

NOTE:

WHEN AN EXIT RAMP IS CLOSED, AN "EXIT CLOSED" SIGN PANEL WITH A BLACK LEGEND AND BORDER ON AN ORANGE BACKGROUND SHOULD BE PLACED DIAGONALLY ACROSS THE INTERCHANGE/INTERSECTION GUIDE SIGNS. (SEE PG. 592 OF THE 2009 M.U.T.C.D.)

NOT TO SCALE

DETOUR SIGNING

GRAND AVE RAMPS E & EE

Preliminary Plans

MicroStation v8.11.7.443
E-SHEET NAME:
USER: tvonbehren
DATE PLOTTED: January 2, 2012
FILE NAME: P:\CIVIL\147\N6-2021.00\CONTRACT PLANS AND PROPOSAL\CONTRACT PLAN SET\ROADWAY\R292OMT.DGN

COUNTY OF	ITEM NO.	SHEET NO.
CAMPBELL	6-2021.00	R293

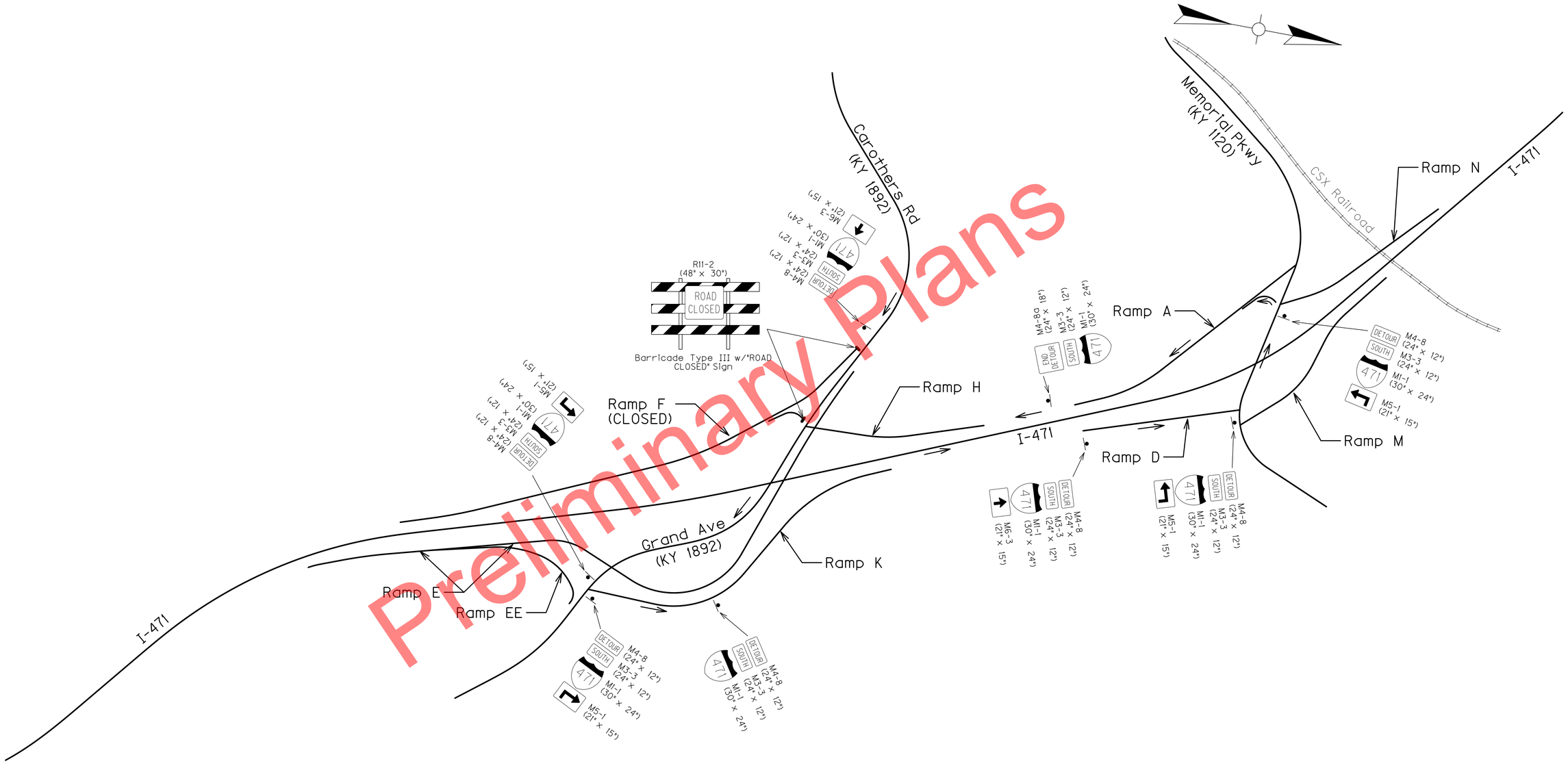

Preliminary Plans

NOT TO SCALE

DETOUR SIGNING
GRAND AVE RAMP F

MicroStation v8.11.7.443
E-SHEET NAME:
USER: tvonbehren
DATE PLOTTED: January 2, 2012
FILE NAME: P:\CIVIL\147\N6-2021.00\CONTRACT PLANS AND PROPOSAL\CONTRACT PLAN SET\ROADWAY\R293OMT.DGN

COUNTY OF	ITEM NO.	SHEET NO.
CAMPBELL	6-2021.00	R294

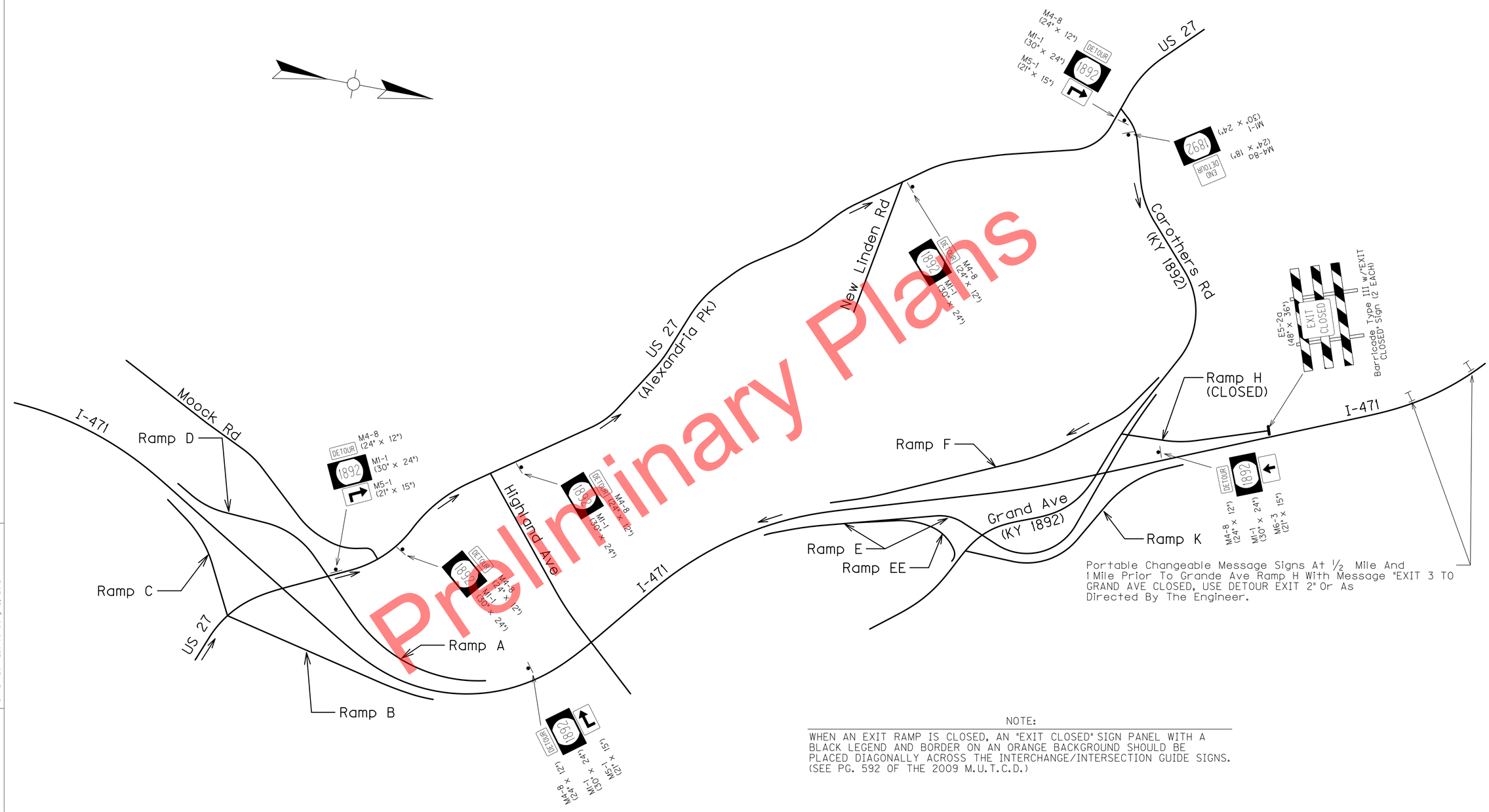

Preliminary Plans

NOTE:

WHEN AN EXIT RAMP IS CLOSED, AN "EXIT CLOSED" SIGN PANEL WITH A BLACK LEGEND AND BORDER ON AN ORANGE BACKGROUND SHOULD BE PLACED DIAGONALLY ACROSS THE INTERCHANGE/INTERSECTION GUIDE SIGNS. (SEE PG. 592 OF THE 2009 M.U.T.C.D.)

NOT TO SCALE

DETOUR SIGNING

GRAND AVE RAMP H

MicroStation v8.11.7.443
E-SHEET NAME:
USER: tvonbehren
DATE PLOTTED: January 2, 2012
FILE NAME: P:\CIVIL\147IN6-2021.00\CONTRACT PLANS AND PROPOSAL\CONTRACT PLAN SET\ROADWAY\R294GOMT.DGN

COUNTY OF	ITEM NO.	SHEET NO.
CAMPBELL	6-2021.00	R295

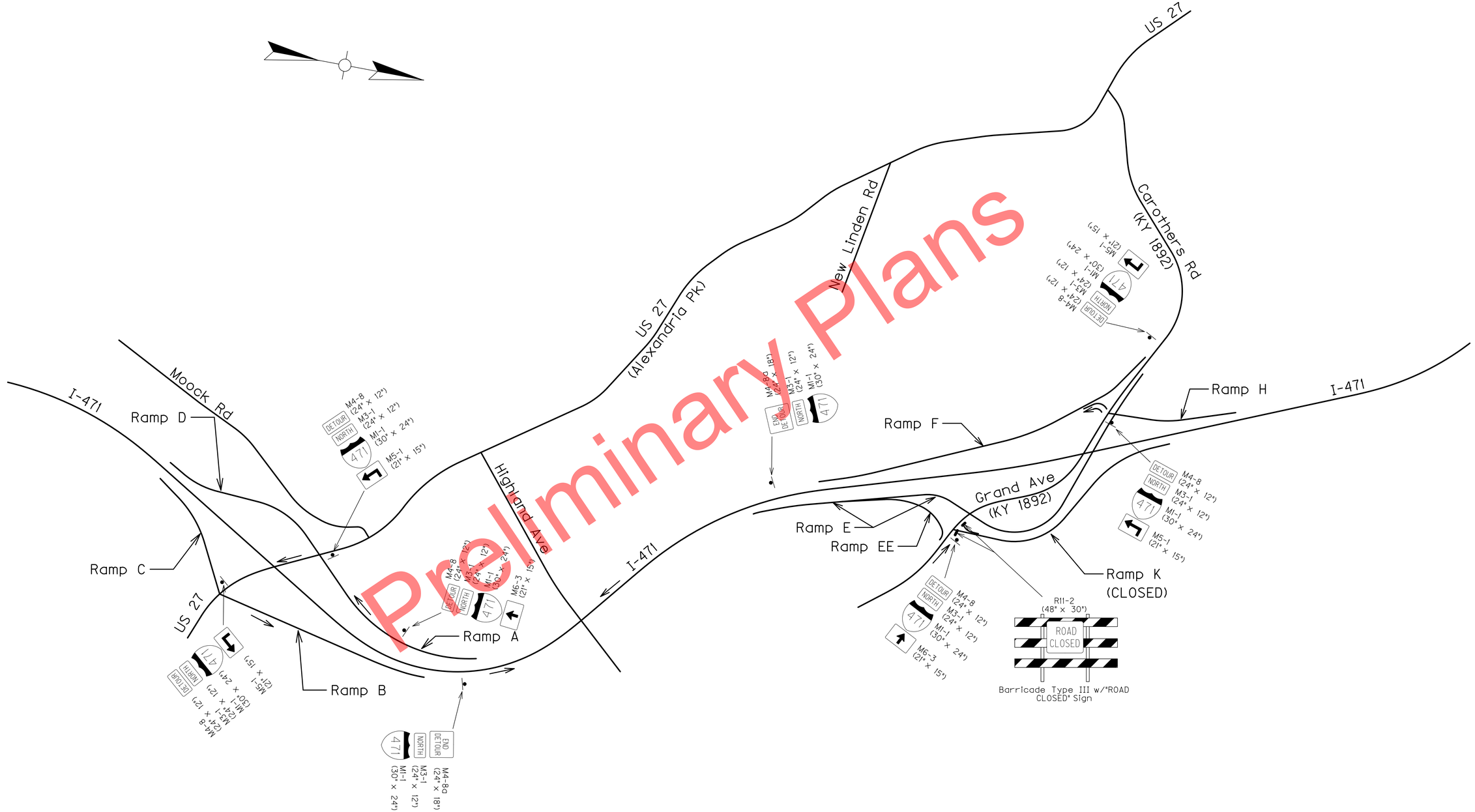

Preliminary Plans

NOT TO SCALE

DETOUR SIGNING
GRAND AVE RAMP K

MicroStation v8.11.7.443
E-SHEET NAME:
USER: tvonbehren
DATE PLOTTED: January 2, 2012
FILE NAME: P:\CIVIL\471N\6-2021.00\CONTRACT PLANS AND PROPOSAL\CONTRACT PLAN SET\ROADWAY\R295GOMT.DGN

COUNTY OF	ITEM NO.	SHEET NO.
CAMPBELL	6-2021.00	R296

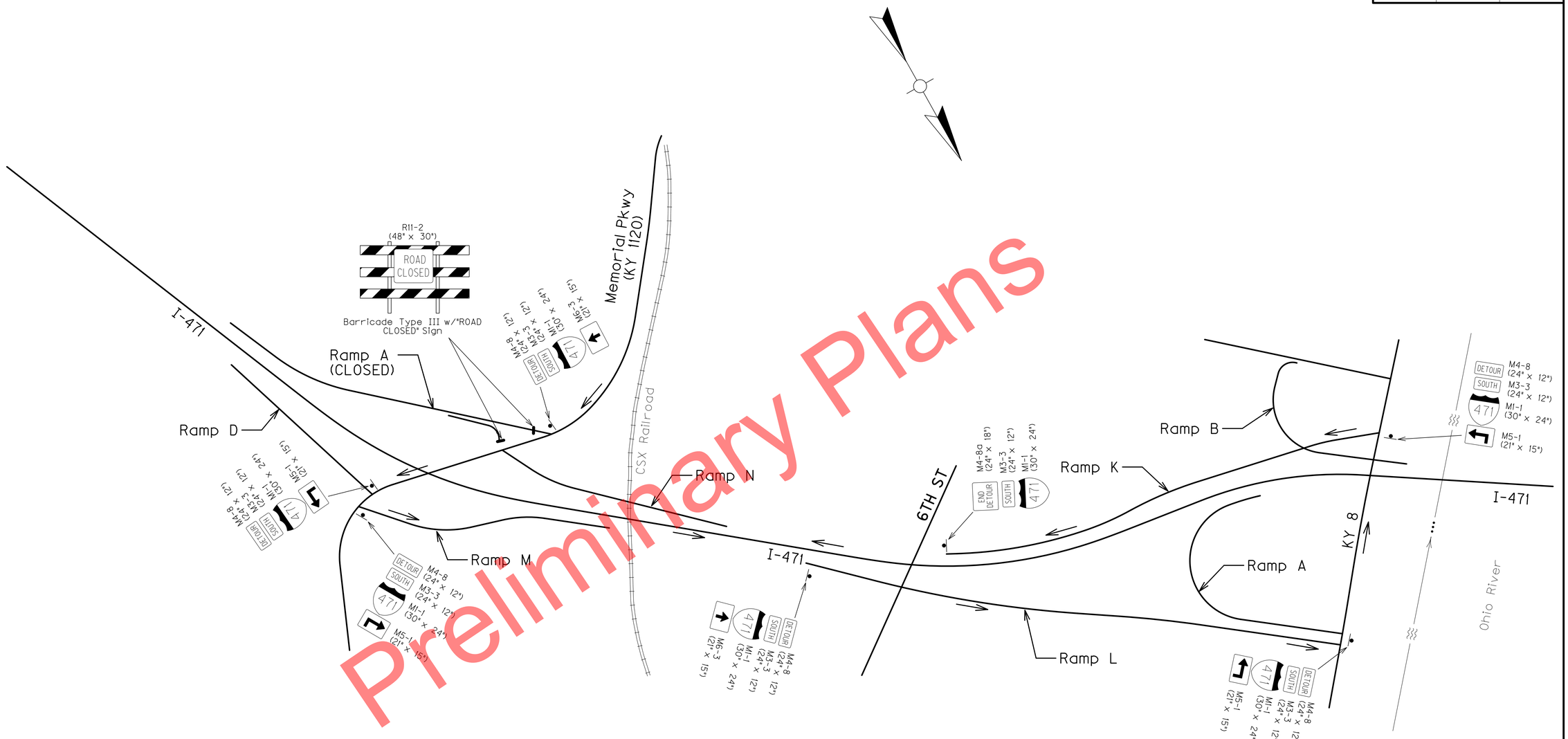

Preliminary Plans

NOT TO SCALE

DETOUR SIGNING
MEMORIAL PKWY RAMP A

MicroStation v8.11.7.443
E-SHEET NAME:
USER: tvonbehren
DATE PLOTTED: January 2, 2012
FILE NAME: P:\CIVIL\147\N6-2021.00\CONTRACT PLANS AND PROPOSAL\CONTRACT PLAN SET\ROADWAY\R296GOMT.DGN

COUNTY OF	ITEM NO.	SHEET NO.
CAMPBELL	6-2021.00	R297

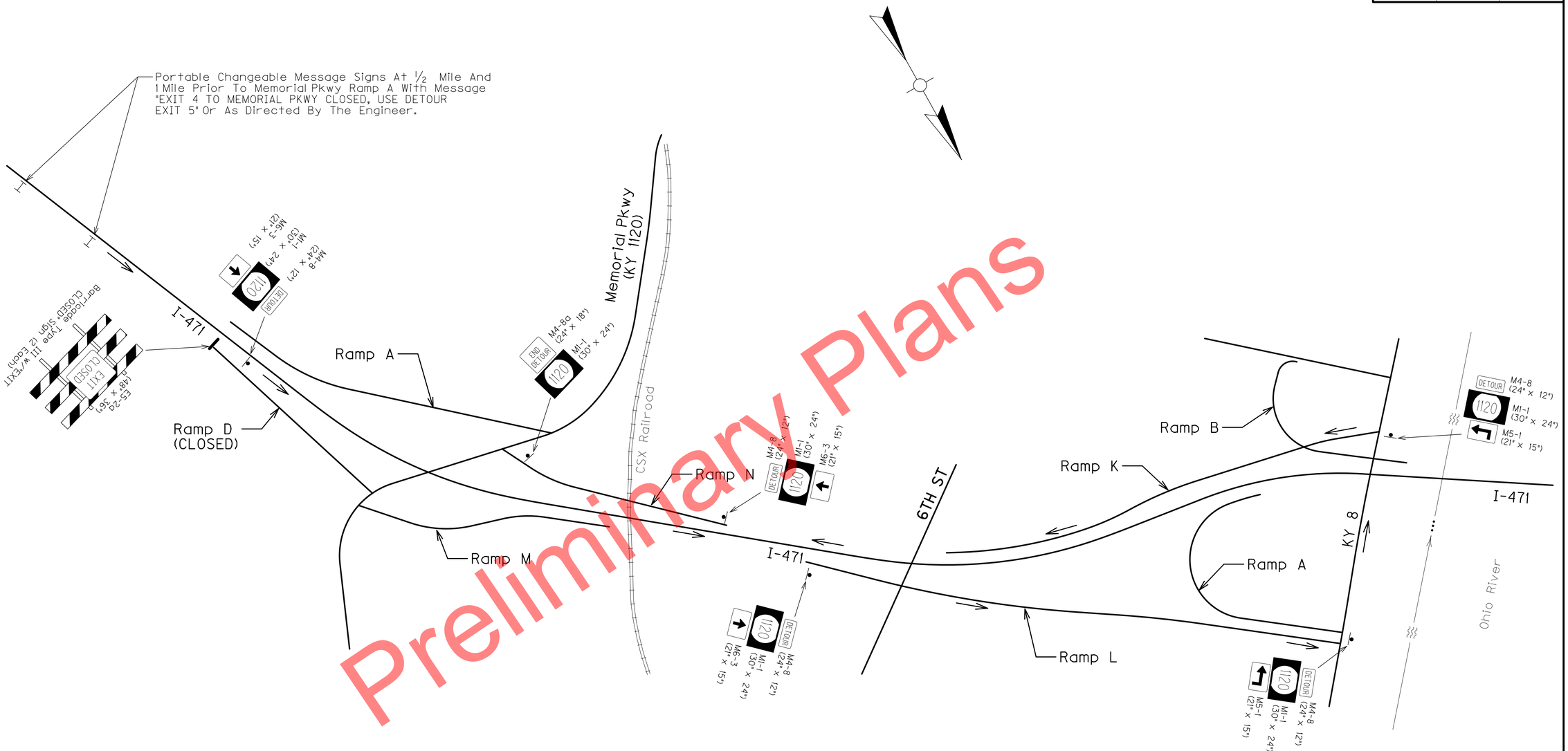

Preliminary Plans

NOTE:

WHEN AN EXIT RAMP IS CLOSED, AN "EXIT CLOSED" SIGN PANEL WITH A BLACK LEGEND AND BORDER ON AN ORANGE BACKGROUND SHOULD BE PLACED DIAGONALLY ACROSS THE INTERCHANGE/INTERSECTION GUIDE SIGNS. (SEE PG. 592 OF THE 2009 M.U.T.C.D.)

NOT TO SCALE

DETOUR SIGNING

MEMORIAL PKWY RAMP D

MicroStation v8.11.7.443
E-SHEET NAME:
USER: tvonbehren
DATE PLOTTED: January 2, 2012
FILE NAME: P:\CIVIL\147\N6-2021.00\CONTRACT PLANS AND PROPOSAL\CONTRACT PLAN SET\ROADWAY\R297GOMT.DGN

COUNTY OF	ITEM NO.	SHEET NO.
CAMPBELL	6-2021.00	R298

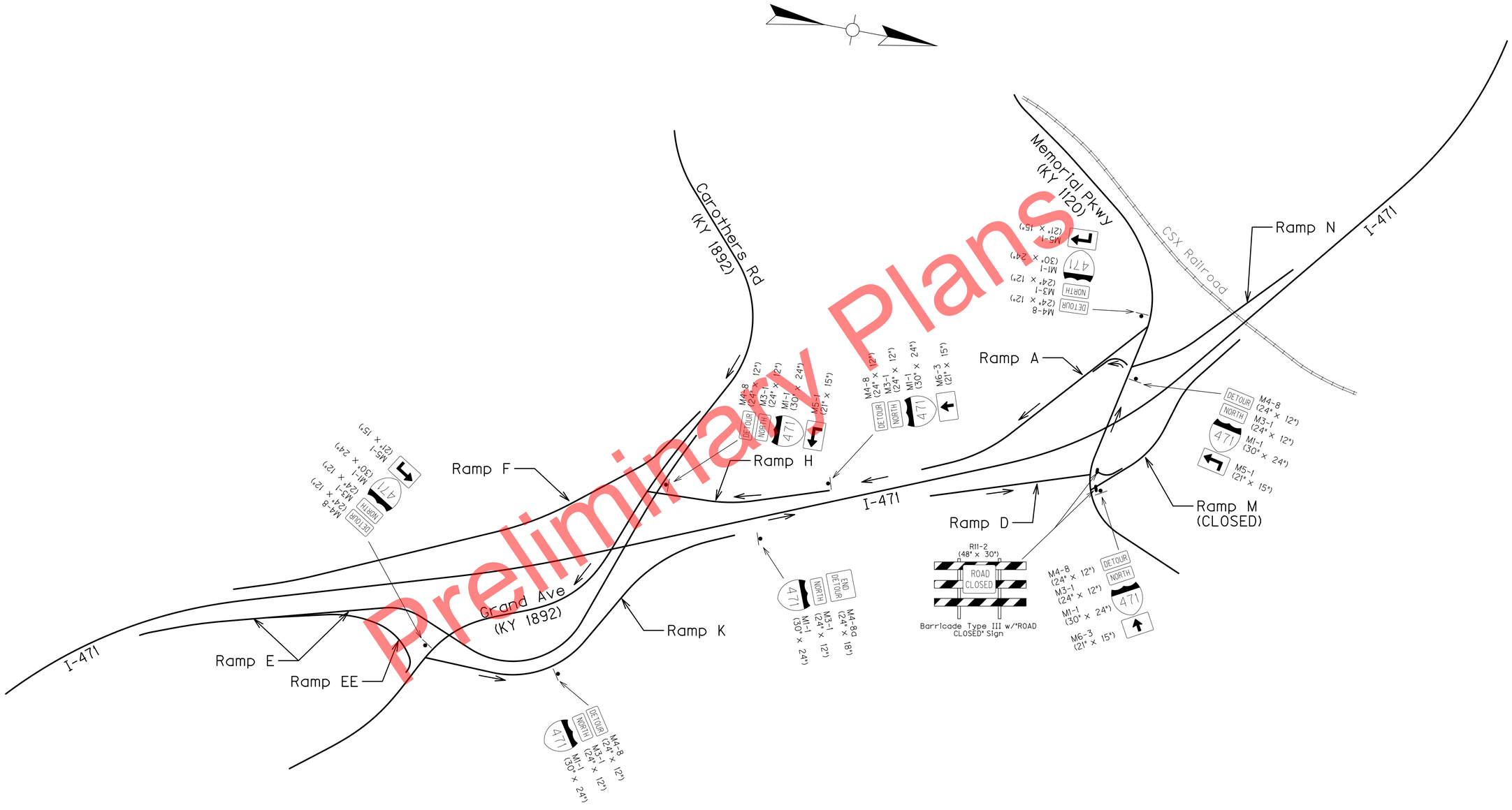

Preliminary Plans

NOT TO SCALE

DETOUR SIGNING
MEMORIAL PKWY RAMP M

MicroStation v8.11.7.443
E-SHEET NAME:
USER: tvonbehren
DATE PLOTTED: January 2, 2012
FILE NAME: P:\CIVIL\471\6-2021.00\CONTRACT PLANS AND PROPOSAL\CONTRACT PLAN SET\ROADWAY\R298OMT.DGN

COUNTY OF	ITEM NO.	SHEET NO.
CAMPBELL	6-2021.00	R299

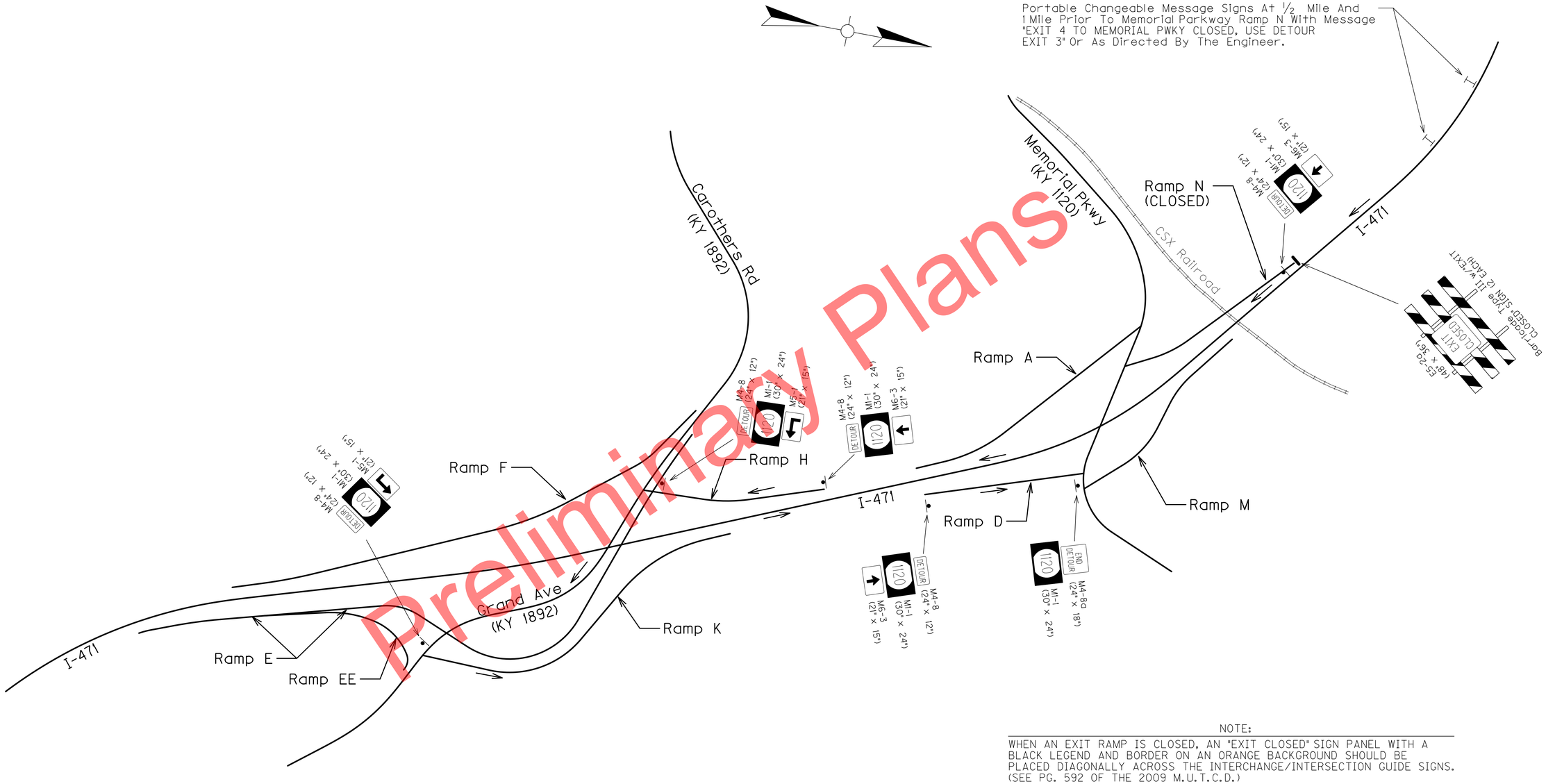

Preliminary Plans

NOT TO SCALE

DETOUR SIGNING

MEMORIAL PKWY RAMP N

FILE NAME: P:\CIVIL\147\N6-2021.00\CONTRACT PLANS AND PROPOSAL\CONTRACT PLAN SET\ROADWAY\R299GMT.DGN
USER: tvonbehren
DATE PLOTTED: January 2, 2012
E-SHEET NAME:
MicroStation v8.11.7.443

COUNTY OF	ITEM NO.	SHEET NO.
CAMPBELL	6-2021.00	R300

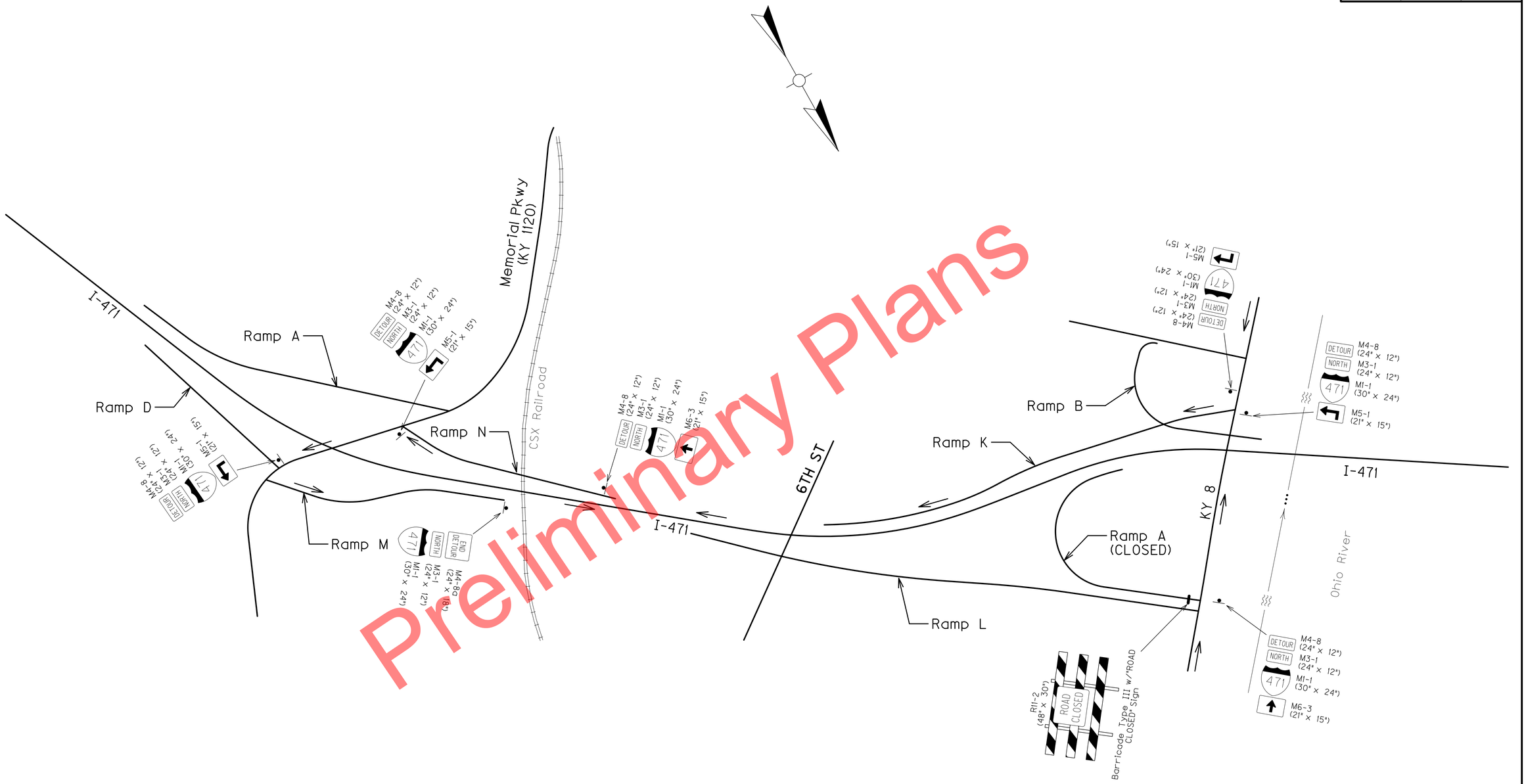

Preliminary Plans

NOT TO SCALE

DETOUR SIGNING

KY 8 RAMP A

MicroStation v8.11.7.443
E-SHEET NAME:
USER: tvonbehren
DATE PLOTTED: January 2, 2012
FILE NAME: P:\CIVIL\I471\6-2021.00\CONTRACT PLANS AND PROPOSAL\CONTRACT PLAN SET\ROADWAY\R300OOMT.DGN

COUNTY OF	ITEM NO.	SHEET NO.
CAMPBELL	6-2021.00	R301

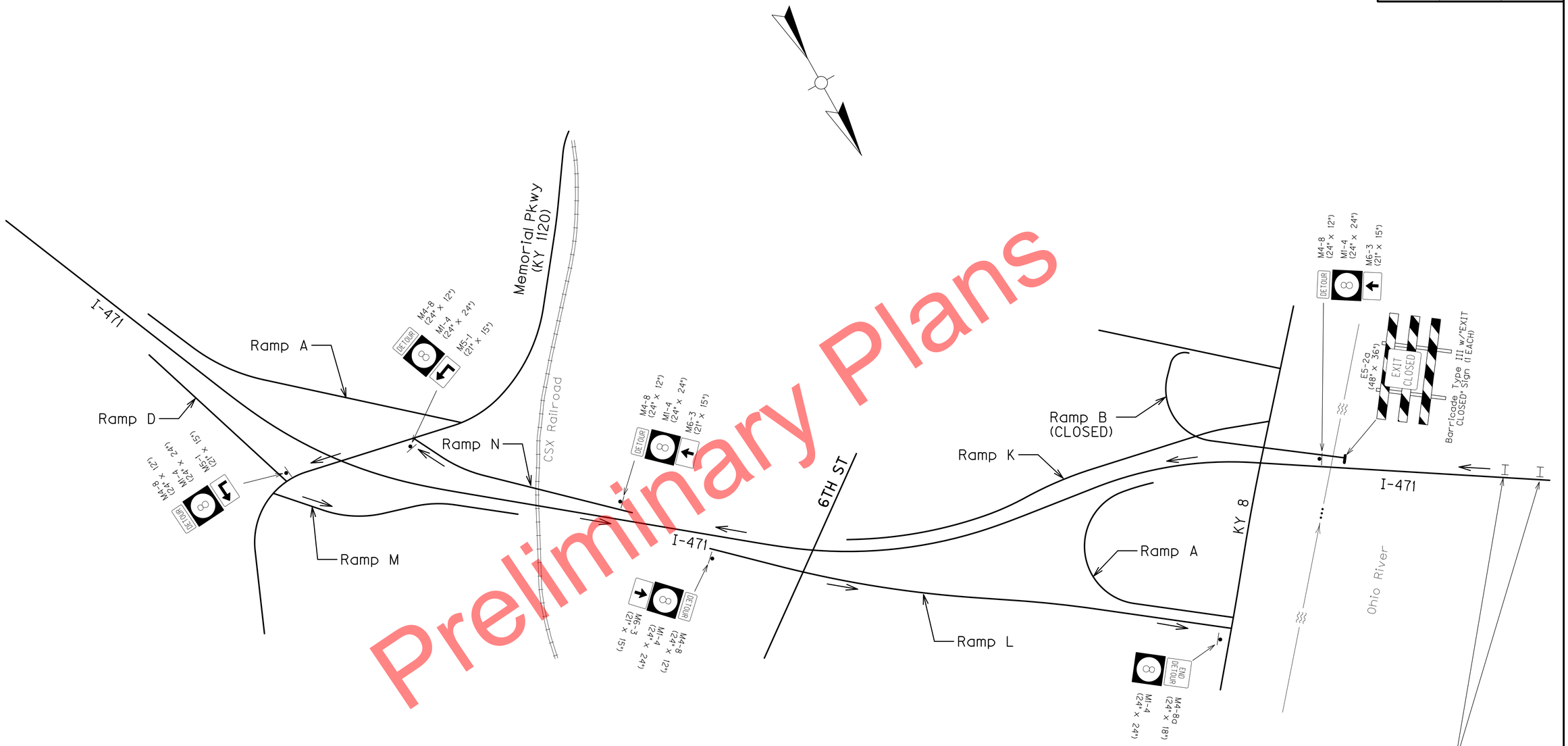

Portable Changeable Message Signs On I-471 SB At ½ Mile And 1 Mile Prior To KY 8 Ramp B And One On The US 50 Ramp To I-471 SB In Ohio With Message "EXIT 5 TO KY 8 CLOSED, USE DETOUR EXIT 4" Or As Directed By The Engineer.

NOTE:

WHEN AN EXIT RAMP IS CLOSED, AN "EXIT CLOSED" SIGN PANEL WITH A BLACK LEGEND AND BORDER ON AN ORANGE BACKGROUND SHOULD BE PLACED DIAGONALLY ACROSS THE INTERCHANGE/INTERSECTION GUIDE SIGNS. (SEE PG. 592 OF THE 2009 M.U.T.C.D.)

NOT TO SCALE

DETOUR SIGNING

KY 8 RAMP B

Preliminary Plans

MicroStation v8.11.7.443
E-SHEET NAME:
USER: tvonbehren
DATE PLOTTED: January 2, 2012
FILE NAME: P:\CIVIL\1471\6-2021.00\CONTRACT PLANS AND PROPOSAL\CONTRACT PLAN SET\ROADWAY\R301OOMT.DGN

COUNTY OF	ITEM NO.	SHEET NO.
CAMPBELL	6-2021.00	R302

Preliminary Plans

Monmouth St (US 27)

Saratoga St

Washington Ave

E 10th St (KY 1120)

KY 8

I-471

MP Ramp A

MP Ramp D

MP Ramp N

MP Ramp M

Memorial Pkwy (KY 1120)

CSX Railroad

6TH ST

KY 8 Ramp K (CLOSED)

KY 8 Ramp L

KY 8 Ramp A

KY8 Ramp B

M4-8 (24" x 12") DETOUR
M3-3 (24" x 12") SOUTH
M1-1 (30" x 24") 471
M5-1 (21" x 15")

M4-8a (24" x 18") END DETOUR
M3-3 (24" x 12") SOUTH
M1-1 (30" x 24") 471

R11-2 (48" x 30") ROAD CLOSED
Barricade Type III w/"ROAD CLOSED" Sign

M6-3 (21" x 15")

NOT TO SCALE

DETOUR SIGNING
KY 8 RAMP K

FILE NAME: P:\CIVIL\147\N6-2021.00\CONTRACT PLANS AND PROPOSAL\CONTRACT PLAN SET\ROADWAY\R3020MT.DGN
USER: tvonbehren
DATE PLOTTED: January 2, 2012
E-SHEET NAME:
MicroStation v8.11.7.443

COUNTY OF	ITEM NO.	SHEET NO.
CAMPBELL	6-2021.00	R303

Preliminary Plans

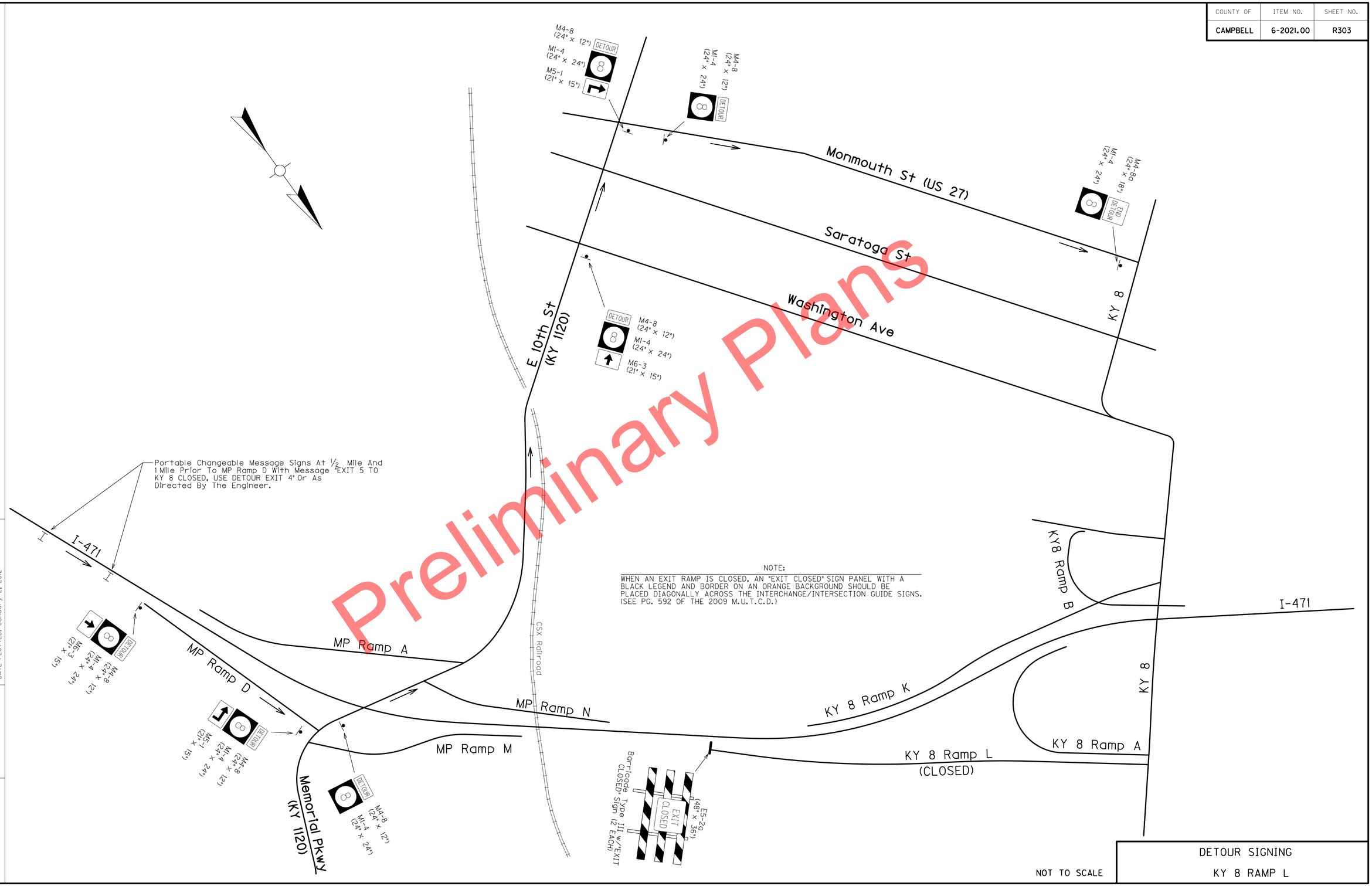

NOTE:
WHEN AN EXIT RAMP IS CLOSED, AN "EXIT CLOSED" SIGN PANEL WITH A BLACK LEGEND AND BORDER ON AN ORANGE BACKGROUND SHOULD BE PLACED DIAGONALLY ACROSS THE INTERCHANGE/INTERSECTION GUIDE SIGNS. (SEE PG. 592 OF THE 2009 M.U.T.C.D.)

NOT TO SCALE

DETOUR SIGNING
KY 8 RAMP L

MicroStation v8.11.7.443
E-SHEET NAME:
USER: tvonbehren
DATE PLOTTED: January 2, 2012
FILE NAME: P:\CIVIL\147IN6-2021.00\CONTRACT PLANS AND PROPOSAL\CONTRACT PLAN SET\ROADWAY\R303GOMT.DGN

COUNTY OF	ITEM NO.	SHEET NO.
CAMPBELL	6-2021.00	R304

STATE PLANE COORDINATES

Coordinates for horizontal control were obtained from GPS methods and adjusted to the NAD 83 State Plane Coordinate System, Kentucky Single Zone in U.S. Survey Feet using monuments in the Northern Kentucky Control Network to control the GPS Site Calibration used to determine the coordinates of the monuments for this project. These are State Plane Coordinates and are on the State Plane Grid.

BASIS OF ELEVATIONS

Elevations are NAVD 88 in U.S. Survey Feet. The Origin of Levels for this project is Control Monument 152. Its elevation (676.76) is based on a GPS observation using GEOID03 and a site calibration of the entire project area using Northern Kentucky Control Network monuments. Once the GPS elevation of CP 152 was determined, closed differential levels loops were run from it through all other monuments used for this project.

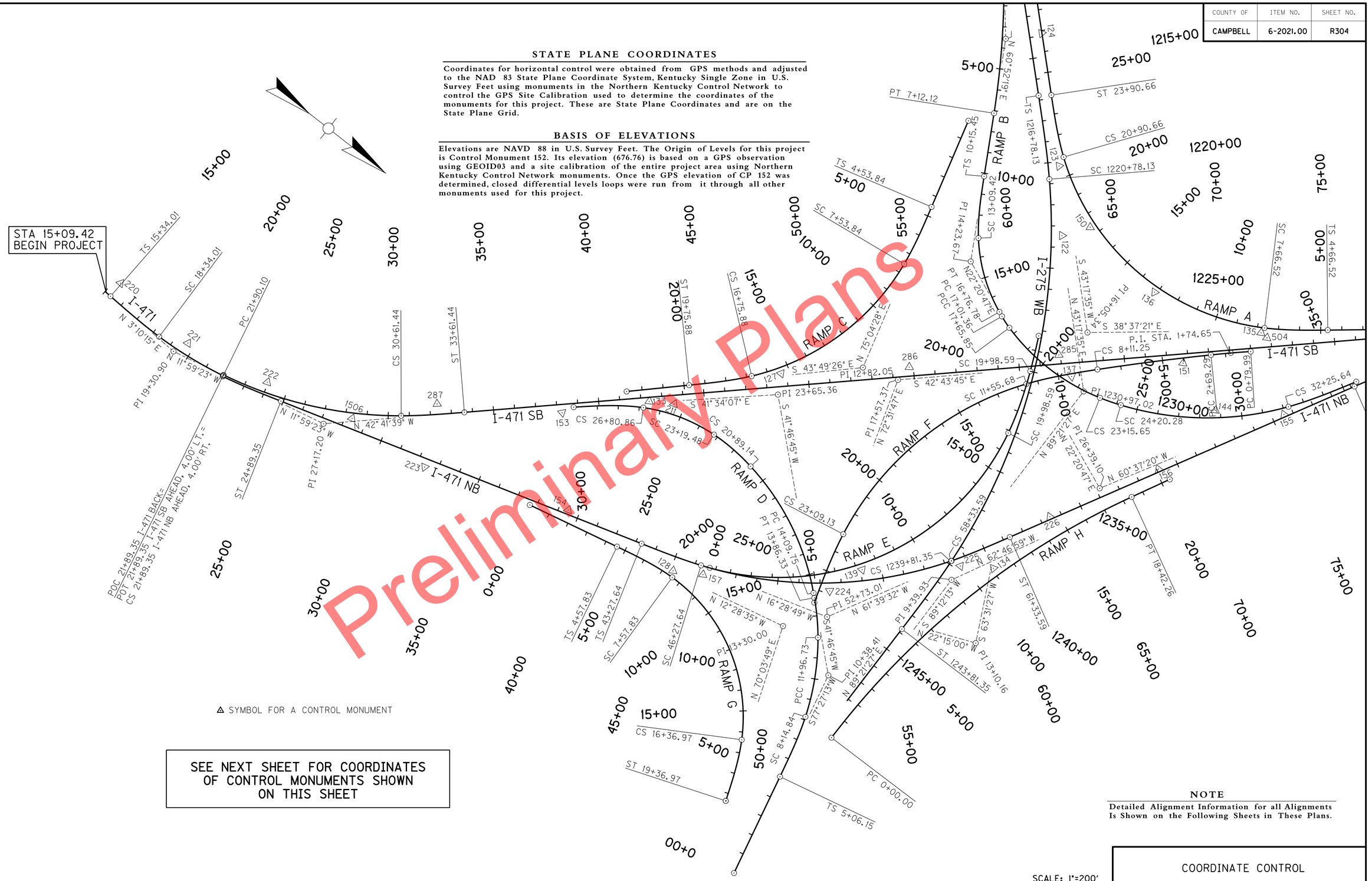

△ SYMBOL FOR A CONTROL MONUMENT

SEE NEXT SHEET FOR COORDINATES OF CONTROL MONUMENTS SHOWN ON THIS SHEET

NOTE

Detailed Alignment Information for all Alignments Is Shown on the Following Sheets in These Plans.

SCALE: 1"=200'

COORDINATE CONTROL

Preliminary Plans

MicroStation v8.11.7.443
E-SHEET NAME:
USER: tvonbehren
DATE PLOTTED: January 2, 2012
FILE NAME: P:\CIVIL\471N6-2021.00\CONTRACT PLANS AND PROPOSAL\CONTRACT PLAN SET\ROADWAY\R304GCC.DGN

COUNTY OF	ITEM NO.	SHEET NO.
CAMPBELL	6-2021.00	R305

COORDINATE CONTROL POINTS

POINT	DESCRIPTION	State Plane Coordinates			CENTERLINE	STATION and OFFSET
		NORTH (Y)	EAST (X)	ELEV. (Z)		
122	5/8" Rebar & 1 1/2" Aluminum Cap	4271333.198	5286405.930	733.58	I-275 WB	1223+45.04, 50.48' Lt
123	5/8" Rebar & 1 1/2" Aluminum Cap	4271119.431	5286154.736	731.85	I-275 WB	1220+20.74, 51.68' Lt
124	5/8" Rebar & 1 1/2" Aluminum Cap	4270666.286	5285709.711	723.02	I-275 WB	1213+88.30, 58.95' Lt
127	5/8" Rebar & 1 1/2" Aluminum Cap	4270687.811	5287741.322	744.24	I-471 SB	48+72.80, 62.09' Lt
128	5/8" Rebar & 1 1/2" Aluminum Cap	4270861.220	5288793.884	758.21	I-471 NB	45+11.64, 66.66' Rt
133	5/8" Rebar & 1 1/2" Aluminum Cap	4270277.134	5288230.891	765.19	I-471 SB	42+38.99, 19.27' Rt
134	5/8" Rebar & 1 1/2" Aluminum Cap	4272049.712	5287848.461	721.52	I-275 Ramp H	11+08.84, 38.91' Lt
135	5/8" Rebar & 1 1/2" Aluminum Cap	4272360.711	5286187.518	687.52	I-275 Ramp A	7+79.74, 25.12' Lt
136	5/8" Rebar & 1 1/2" Aluminum Cap	4271844.205	5286347.102	711.81	I-275 Ramp A	13+13.02, 27.32' Lt
137	5/8" Rebar & 1 1/2" Aluminum Cap	4271781.095	5286904.145	704.17	I-471 SB	62+44.03, 63.94' Rt
139	5/8" Rebar & 1 1/2" Aluminum Cap	4271563.558	5288237.366	724.73	I-471 NB	54+05.67, 52.66' Lt
144	5/8" Rebar & 1 1/2" Aluminum Cap	4272416.780	5286610.272	712.71	I-275 Ramp B	28+75.70, 35.21' Lt
150	5/8" Rebar & 1 1/2" Aluminum Cap	4271414.444	5286292.597	727.00	I-275 Ramp A	17+38.52, 27.39' Lt
151	5/8" Rebar & 1 1/2" Aluminum Cap	4272158.074	5286528.501	692.64	I-471 SB	67+75.82, 43.47' Rt
153	5/8" Rebar & 1 1/2" Aluminum Cap	4269984.742	5288527.466	778.36	I-471 SB	38+22.99, 38.98' Rt
154	5/8" Rebar & 1 1/2" Aluminum Cap	4270292.127	5288872.933	774.56	I-471 NB	39+45.46, 20.82' Lt

COORDINATE CONTROL POINTS

POINT	DESCRIPTION	State Plane Coordinates			CENTERLINE	STATION and OFFSET
		NORTH (Y)	EAST (X)	ELEV. (Z)		
155	5/8" Rebar & 1 1/2" Aluminum Cap	4272684.225	5286425.529	699.41	I-471 NB	75+56.84, 12.78' Lt
156	5/8" Rebar & 1 1/2" Aluminum Cap	4272375.519	5286996.603	707.37	I-471 NB	69+07.66, 13.38' Lt
157	5/8" Rebar & 1 1/2" Aluminum Cap	4270984.038	5288720.885	752.57	I-471 NB	46+48.80, 39.45' Rt
211	Alum. Disk In Concrete Base	4270378.231	5288167.940	761.38	I-471 SB	43+55.99, 41.55' Rt
220	5/8" Rebar & 1 1/2" Aluminum Cap	4267958.201	5289333.906	846.24	I-471	15+28.92, 77.94' Lt
221	5/8" Rebar & 1 1/2" Aluminum Cap	4268384.855	5289361.004	841.19	I-471	19+65.15, 52.43' Lt
222	5/8" Rebar & 1 1/2" Aluminum Cap	4268795.904	5289274.739	827.31	I-471 SB	23+97.57, 49.22' Lt
223	5/8" Rebar & 1 1/2" Aluminum Cap	4269630.452	5289132.033	799.87	I-471 NB	32+37.46, 39.92' Rt
224	5/8" Rebar & 1 1/2" Aluminum Cap	4271504.517	5288411.352	730.31	I-471 NB	52+44.83, 37.47' Rt
225	5/8" Rebar & 1 1/2" Aluminum Cap	4271919.657	5287936.892	714.80	I-471 NB	58+65.91, 37.42' Rt
226	5/8" Rebar & 1 1/2" Aluminum Cap	4272109.375	5287491.265	710.62	I-471 NB	63+45.95, 12.80' Lt
285	5/8" Rebar & 1 1/2" Aluminum Cap	4271670.264	5286860.964	706.08	I-471 SB	61+91.85, 42.95' Lt
286	5/8" Rebar & 1 1/2" Aluminum Cap	4271147.732	5287343.223	726.36	I-471 SB	54+80.78, 42.82' Lt
287	5/8" Rebar & 1 1/2" Aluminum Cap	4269492.797	5288859.938	799.88	I-471 SB	32+35.28, 49.66' Lt
504	Alum. Disk In Concrete Base	4272397.203	5286189.049	684.25	I-471 SB	71+81.75, 43.87' Lt
1506	Alum. Disk In Concrete Base	4269217.709	5289162.720	813.87	I-471 SB	28+31.09, 26.08' Rt

Preliminary Plans

COORDINATES OF CONTROL MONUMENTS
SHOWN ON THE PREVIOUS SHEET

COORDINATE CONTROL

MicroStation v8.11.7.443
E-SHEET NAME:
USER: tvonbehren
DATE PLOTTED: January 2, 2012
FILE NAME: P:\CIVIL\147IN6-2021.00\CONTRACT PLANS AND PROPOSAL\CONTRACT PLAN SET\ROADWAY\R305GCC.DGN

COUNTY OF	ITEM NO.	SHEET NO.
CAMPBELL	6-2021.00	R306

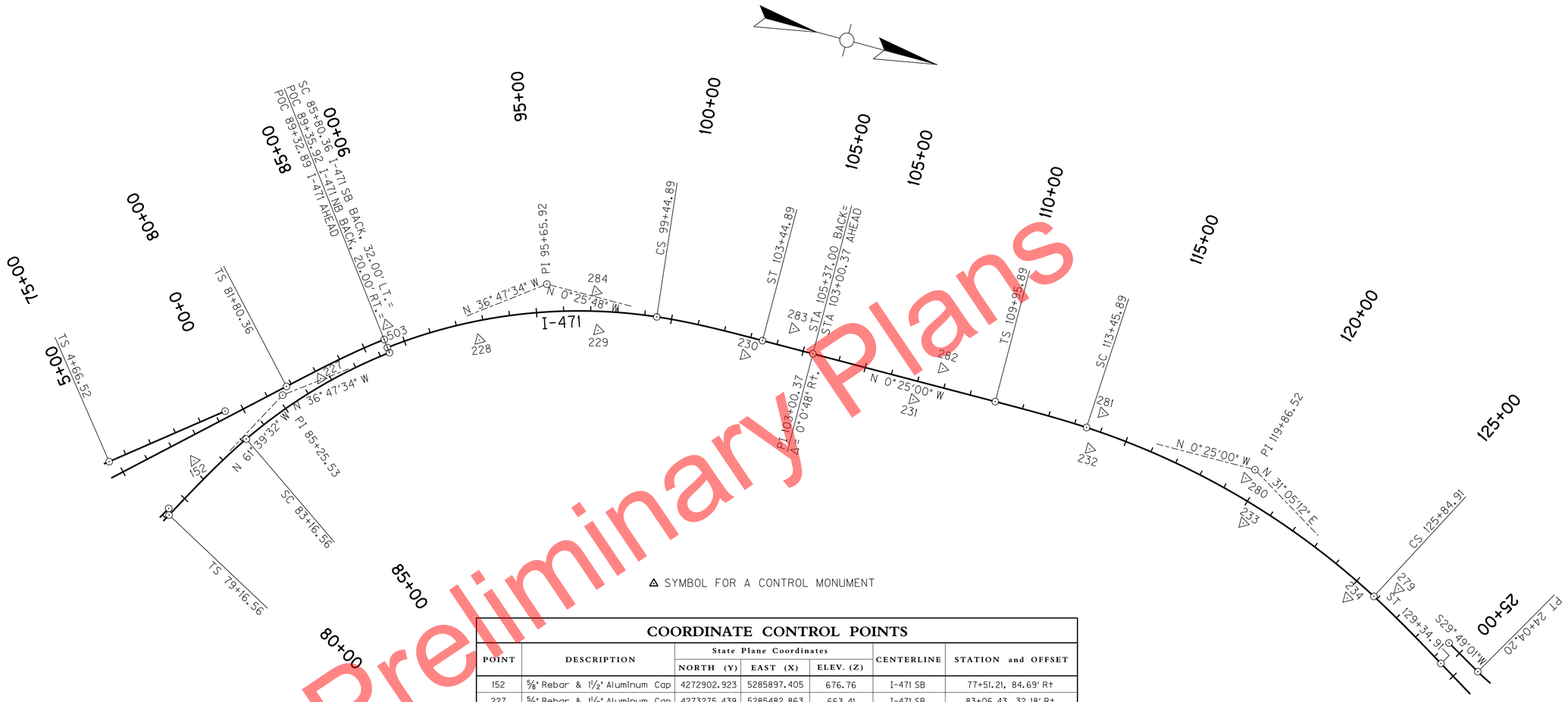

Preliminary Plans

△ SYMBOL FOR A CONTROL MONUMENT

COORDINATE CONTROL POINTS

POINT	DESCRIPTION	State Plane Coordinates			CENTERLINE	STATION and OFFSET
		NORTH (Y)	EAST (X)	ELEV. (Z)		
152	⅝" Rebar & 1½" Aluminum Cap	4272902.923	5285897.405	676.76	I-471 SB	77+51.21, 84.69' Rt
227	⅝" Rebar & 1½" Aluminum Cap	4273275.439	5285482.863	663.41	I-471 SB	83+06.43, 32.18' Rt
228	⅝" Rebar & 1½" Aluminum Cap	4273803.264	5285192.950	653.72	I-471 A	92+72.92, 69.80' Rt
229	⅝" Rebar & 1½" Aluminum Cap	4274216.847	5285044.647	652.06	I-471 A	97+30.05, 69.84' Rt
230	⅝" Rebar & 1½" Aluminum Cap	4274762.414	5284992.635	650.92	I-471 A	102+94.25, 68.62' Rt
231	⅝" Rebar & 1½" Aluminum Cap	4275405.823	5284988.343	647.52	I-471 B	107+01.18, 69.09' Rt
232	⅝" Rebar & 1½" Aluminum Cap	4276081.469	5284994.350	643.37	I-471 B	113+82.14, 70.71' Rt
233	⅝" Rebar & 1½" Aluminum Cap	4276699.848	5285111.035	651.89	I-471 B	120+29.17, 76.24' Rt
234	⅝" Rebar & 1½" Aluminum Cap	4277142.423	5285278.013	667.85	I-471 B	125+15.02, 70.08' Rt
279	⅝" Rebar & 1½" Aluminum Cap	4277316.213	5285196.685	674.42	I-471 B	126+31.77, 82.10' Lt
280	⅝" Rebar & 1½" Aluminum Cap	4276665.916	5284949.434	654.03	I-471 B	119+52.34, 69.97' Lt
282	⅝" Rebar & 1½" Aluminum Cap	4275480.709	5284849.999	647.17	I-471 B	107+77.07, 68.71' Lt
283	⅝" Rebar & 1½" Aluminum Cap	4274911.659	5284851.546	650.48	I-471 A	104+44.67, 71.32' Lt
284	⅝" Rebar & 1½" Aluminum Cap	4274172.571	5284909.064	655.73	I-471 A	97+17.57, 72.24' Lt
503	Alum. Disk In Concrete Base	4273459.816	5285228.768	657.08	I-471 A	89+61.11, 78.33' Lt

STATE PLANE COORDINATES

Coordinates for horizontal control were obtained from GPS methods and adjusted to the NAD 83 State Plane Coordinate System, Kentucky Single Zone in U.S. Survey Feet using monuments in the Northern Kentucky Control Network to control the GPS Site Calibration used to determine the coordinates of the monuments for this project. These are State Plane Coordinates and are on the State Plane Grid.

BASIS OF ELEVATIONS

Elevations are NAVD 88 in U.S. Survey Feet. The Origin of Levels for this project is Control Monument 152. Its elevation (676.76) is based on a GPS observation using GEOID03 and a site calibration of the entire project area using Northern Kentucky Control Network monuments. Once the GPS elevation of CP 152 was determined, closed differential levels loops were run from it through all other monuments used for this project.

NOTE

Detailed Alignment Information for all Alignments Is Shown on the Following Sheets in These Plans.

SCALE: 1"=200'

COORDINATE CONTROL

MicroStation v8.11.7.443
E-SHEET NAME:
USER: tvonbehren
DATE PLOTTED: January 2, 2012
FILE NAME: P:\CIVIL\147\N6-2021.00\CONTRACT PLANS AND PROPOSAL\CONTRACT PLAN SET\ROADWAY\R306GOCC.DGN

COUNTY OF	ITEM NO.	SHEET NO.
CAMPBELL	6-2021.00	R307

COORDINATE CONTROL POINTS

POINT	DESCRIPTION	State Plane Coordinates			CENTERLINE	STATION and OFFSET
		NORTH (Y)	EAST (X)	ELEV. (Z)		
235	5/8" Rebar & 1 1/2" Aluminum Cap	4277716.162	5285614.849	689.07	I-471 B	131+86.53, 74.18' Rt
236	5/8" Rebar & 1 1/2" Aluminum Cap	4278300.892	5285963.531	706.65	I-471 B	138+67.32, 70.87' Rt
237	5/8" Rebar & 1 1/2" Aluminum Cap	4278749.910	5286159.088	720.66	I-471 B	143+52.82, 6.50' Rt
238	5/8" Rebar & 1 1/2" Aluminum Cap	4278970.094	5286368.535	723.24	I-471 B	146+49.53, 72.18' Rt
239	5/8" Rebar & 1 1/2" Aluminum Cap	4279450.786	5286630.843	737.04	I-471 B	151+86.62, 74.74' Rt
240	5/8" Rebar & 1 1/2" Aluminum Cap	4279996.697	5286758.526	753.57	I-471 B	157+21.00, 85.22' Rt
241	5/8" Rebar & 1 1/2" Aluminum Cap	4280477.440	5286685.550	767.73	I-471 B	161+83.09, 77.60' Rt
242	5/8" Rebar & 1 1/2" Aluminum Cap	4280988.302	5286414.328	781.52	I-471 B	167+35.20, 77.75' Rt
243	5/8" Rebar & 1 1/2" Aluminum Cap	4281352.068	5286032.349	778.94	I-471 B	172+47.71, 76.89' Rt
244	5/8" Rebar & 1 1/2" Aluminum Cap	4281754.000	5285535.953	760.02	I-471 B	178+87.04, 76.76' Rt
245	5/8" Rebar & 1 1/2" Aluminum Cap	4282030.882	5285238.269	745.90	I-471 B	183+03.63, 76.70' Rt
246	5/8" Rebar & 1 1/2" Aluminum Cap	4282255.371	5285049.261	736.00	I-471 B	186+05.26, 76.47' Rt
247	5/8" Rebar & 1 1/2" Aluminum Cap	4282580.161	5284840.424	722.61	I-471 B	190+02.43, 78.79' Rt
248	5/8" Rebar & 1 1/2" Aluminum Cap	4283018.071	5284640.439	708.16	I-471 B	194+97.58, 75.80' Rt
266	5/8" Rebar & 1 1/2" Aluminum Cap	4282800.892	5284555.695	717.03	I-471 B	193+25.41, 81.16' Lt

△ SYMBOL FOR A CONTROL MONUMENT

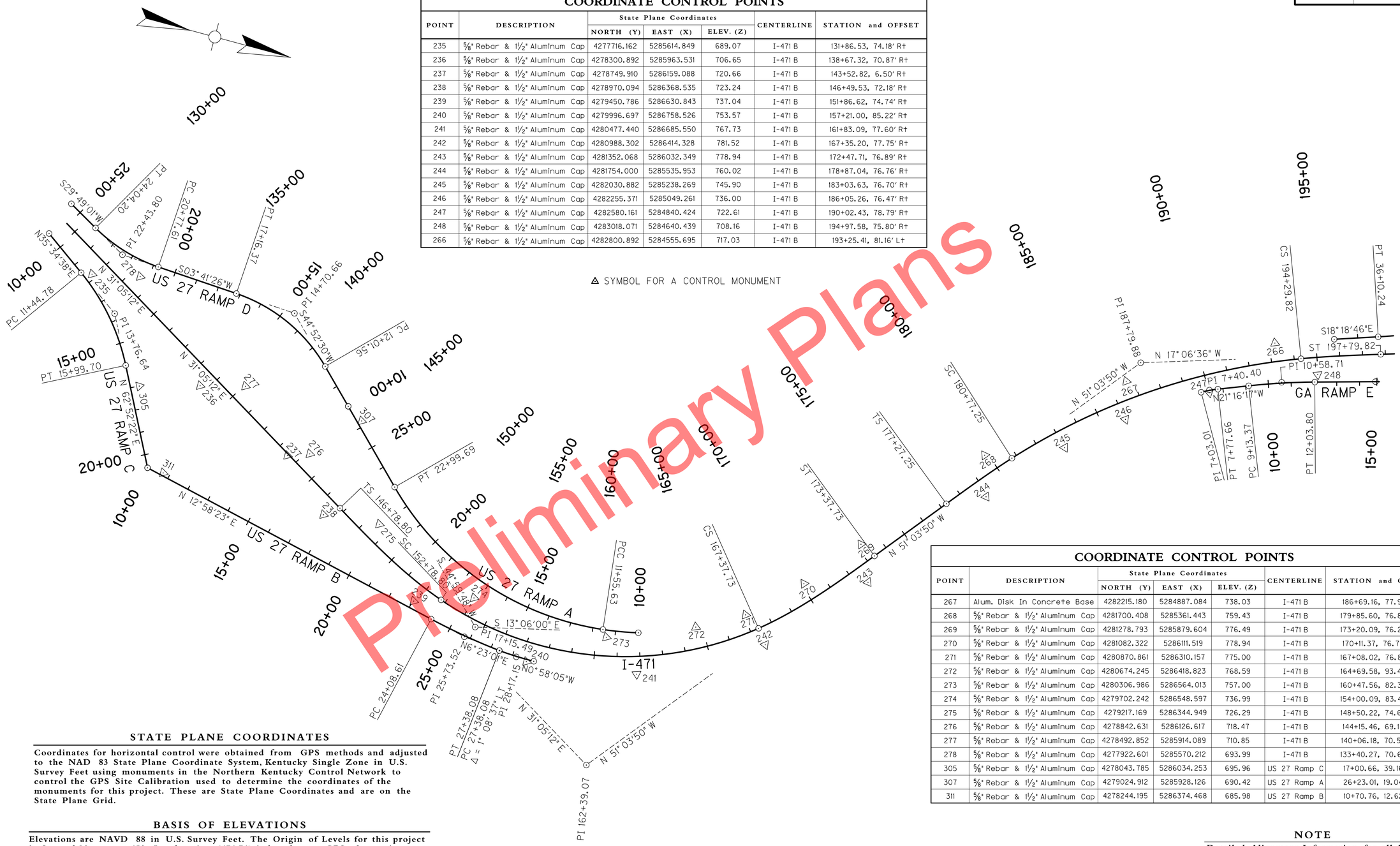

Preliminary Plans

COORDINATE CONTROL POINTS

POINT	DESCRIPTION	State Plane Coordinates			CENTERLINE	STATION and OFFSET
		NORTH (Y)	EAST (X)	ELEV. (Z)		
267	Alum. Disk In Concrete Base	4282215.180	5284887.084	738.03	I-471 B	186+69.16, 77.91' Lt
268	5/8" Rebar & 1 1/2" Aluminum Cap	4281700.408	5285361.443	759.43	I-471 B	179+85.60, 76.83' Lt
269	5/8" Rebar & 1 1/2" Aluminum Cap	4281278.793	5285879.604	776.49	I-471 B	173+20.09, 76.24' Lt
270	5/8" Rebar & 1 1/2" Aluminum Cap	4281082.322	5286111.519	778.94	I-471 B	170+11.37, 76.74' Lt
271	5/8" Rebar & 1 1/2" Aluminum Cap	4280870.861	5286310.157	775.00	I-471 B	167+08.02, 76.87' Lt
272	5/8" Rebar & 1 1/2" Aluminum Cap	4280674.245	5286418.823	768.59	I-471 B	164+69.58, 93.47' Lt
273	5/8" Rebar & 1 1/2" Aluminum Cap	4280306.986	5286564.013	757.00	I-471 B	160+47.56, 82.35' Lt
274	5/8" Rebar & 1 1/2" Aluminum Cap	4279702.242	5286548.597	736.99	I-471 B	154+00.09, 83.43' Lt
275	5/8" Rebar & 1 1/2" Aluminum Cap	4279217.169	5286344.949	726.29	I-471 B	148+50.22, 74.63' Lt
276	5/8" Rebar & 1 1/2" Aluminum Cap	4278842.631	5286126.617	718.47	I-471 B	144+15.46, 69.18' Lt
277	5/8" Rebar & 1 1/2" Aluminum Cap	4278492.852	5285914.089	710.85	I-471 B	140+06.18, 70.59' Lt
278	5/8" Rebar & 1 1/2" Aluminum Cap	4277922.601	5285570.212	693.99	I-471 B	133+40.27, 70.64' Lt
305	5/8" Rebar & 1 1/2" Aluminum Cap	4278043.785	5286034.253	695.96	US 27 Ramp C	17+00.66, 39.16' Lt
307	5/8" Rebar & 1 1/2" Aluminum Cap	4279024.912	5285928.126	690.42	US 27 Ramp A	26+23.01, 19.04' Rt
311	5/8" Rebar & 1 1/2" Aluminum Cap	4278244.195	5286374.468	685.98	US 27 Ramp B	10+70.76, 12.62' Lt

STATE PLANE COORDINATES

Coordinates for horizontal control were obtained from GPS methods and adjusted to the NAD 83 State Plane Coordinate System, Kentucky Single Zone in U.S. Survey Feet using monuments in the Northern Kentucky Control Network to control the GPS Site Calibration used to determine the coordinates of the monuments for this project. These are State Plane Coordinates and are on the State Plane Grid.

BASIS OF ELEVATIONS

Elevations are NAVD 88 in U.S. Survey Feet. The Origin of Levels for this project is Control Monument 152. Its elevation (676.76) is based on a GPS observation using GEOID03 and a site calibration of the entire project area using Northern Kentucky Control Network monuments. Once the GPS elevation of CP 152 was determined, closed differential levels loops were run from it through all other monuments used for this project.

NOTE

Detailed Alignment Information for all Alignments Is Shown on the Following Sheets in These Plans.

SCALE: 1"=200'

COORDINATE CONTROL

FILE NAME: P:\CIVIL\147\N6-2021.00\CONTRACT PLANS AND PROPOSAL\CONTRACT PLAN SET\ROADWAY\R307OCC.DGN
USER: tvanbehren
DATE PLOTTED: January 2, 2012
E-SHEET NAME:
MicroStation v8.11.7.443

COUNTY OF	ITEM NO.	SHEET NO.
CAMPBELL	6-2021.00	R308

STATE PLANE COORDINATES

Coordinates for horizontal control were obtained from GPS methods and adjusted to the NAD 83 State Plane Coordinate System, Kentucky Single Zone in U.S. Survey Feet using monuments in the Northern Kentucky Control Network to control the GPS Site Calibration used to determine the coordinates of the monuments for this project. These are State Plane Coordinates and are on the State Plane Grid.

BASIS OF ELEVATIONS

Elevations are NAVD 88 in U.S. Survey Feet. The Origin of Levels for this project is Control Monument 152. Its elevation (676.76) is based on a GPS observation using GEOID03 and a site calibration of the entire project area using Northern Kentucky Control Network monuments. Once the GPS elevation of CP 152 was determined, closed differential levels loops were run from it through all other monuments used for this project.

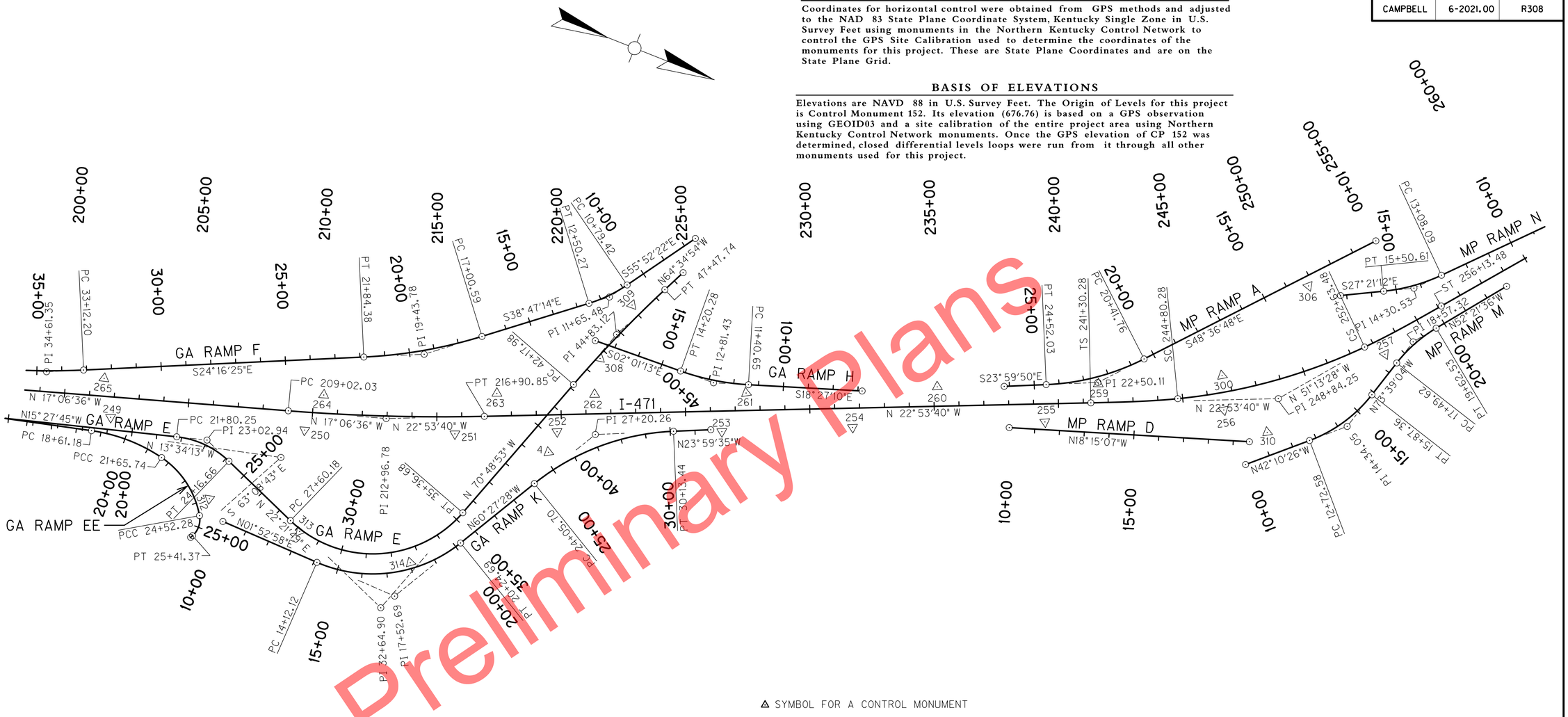

Preliminary Plans

△ SYMBOL FOR A CONTROL MONUMENT

COORDINATE CONTROL POINTS

POINT	DESCRIPTION	State Plane Coordinates			CENTERLINE	STATION and OFFSET
		NORTH (Y)	EAST (X)	ELEV. (Z)		
4	Alum. Disk In Concrete Base	4285368.250	5283921.920	643.36	GA Ramp K	25+20.60, 69.68' Lt
249	5/8" Rebar & 1 1/2" Aluminum Cap	4283679.741	5284439.870	683.95	I-471 B	201+92.02, 82.44' Rt
250	5/8" Rebar & 1 1/2" Aluminum Cap	4284423.658	5284199.967	663.00	I-471 B	209+72.94, 72.34' Rt
251	5/8" Rebar & 1 1/2" Aluminum Cap	4284990.980	5283991.528	643.27	I-471 B	215+72.07, 68.68' Rt
252	5/8" Rebar & 1 1/2" Aluminum Cap	4285369.608	5283831.932	630.19	I-471 B	219+81.92, 68.04' Rt
253	5/8" Rebar & 1 1/2" Aluminum Cap	4285985.488	5283587.664	608.15	I-471 B	226+44.31, 82.62' Rt
254	5/8" Rebar & 1 1/2" Aluminum Cap	4286468.102	5283378.213	589.30	I-471 B	231+70.39, 77.42' Rt
255	5/8" Rebar & 1 1/2" Aluminum Cap	4287179.051	5283072.840	559.80	I-471 B	239+44.13, 72.69' Rt
256	5/8" Rebar & 1 1/2" Aluminum Cap	4287829.916	5282763.329	532.99	I-471 B	246+54.82, 70.42' Rt
257	5/8" Rebar & 1 1/2" Aluminum Cap	4288349.689	5282315.982	513.60	I-471 B	253+23.84, 61.62' Rt
259	5/8" Rebar & 1 1/2" Aluminum Cap	4287322.109	5282851.551	550.07	I-471 B	241+62.06, 75.51' Lt
260	5/8" Rebar & 1 1/2" Aluminum Cap	4286724.507	5283101.222	575.89	I-471 B	235+14.35, 78.00' Lt
261	5/8" Rebar & 1 1/2" Aluminum Cap	4286019.101	5283407.401	605.09	I-471 B	227+45.40, 70.37' Lt

COORDINATE CONTROL POINTS

POINT	DESCRIPTION	State Plane Coordinates			CENTERLINE	STATION and OFFSET
		NORTH (Y)	EAST (X)	ELEV. (Z)		
262	5/8" Rebar & 1 1/2" Aluminum Cap	4285454.812	5283637.161	624.04	I-471 B	221+36.18, 78.24' Lt
263	5/8" Rebar & 1 1/2" Aluminum Cap	4285088.051	5283777.864	636.02	I-471 B	217+43.57, 91.30' Lt
264	5/8" Rebar & 1 1/2" Aluminum Cap	4284443.388	5284040.605	658.97	I-471 B	210+40.64, 73.27' Lt
265	5/8" Rebar & 1 1/2" Aluminum Cap	4283597.831	5284303.874	687.65	I-471 B	201+53.74, 71.64' Lt
300	5/8" Rebar & 1 1/2" Aluminum Cap	4287772.496	5282637.391	528.72	I-471 B	246+72.50, 66.86' Lt
306	5/8" Rebar & 1 1/2" Aluminum Cap	4287962.477	5282174.071	526.53	MP Ramp A	13+19.62, 38.34' Lt
308	5/8" Rebar & 1 1/2" Aluminum Cap	4285422.010	5283494.652	595.49	GA Ramp E	43+67.33, 10.19' Rt
309	5/8" Rebar & 1 1/2" Aluminum Cap	4285462.552	5283247.544	584.89	GA Ramp F	11+04.91, 78.64' Lt
310	5/8" Rebar & 1 1/2" Aluminum Cap	4288025.144	5282782.362	547.12	MP Ramp M	11+24.72, 90.80' Lt
312	5/8" Rebar & 1 1/2" Aluminum Cap	4284169.327	5284597.450	654.87	GA Ramp EE	23+99.97, 55.60' Lt
313	5/8" Rebar & 1 1/2" Aluminum Cap	4284555.180	5284586.306	659.42	GA Ramp E	28+16.14, 9.03' Rt
314	5/8" Rebar & 1 1/2" Aluminum Cap	4285015.288	5284539.036	649.79	GA Ramp K	18+02.95, 23.78' Lt

NOTE

Detailed Alignment Information for all Alignments Is Shown on the Following Sheets in These Plans.

SCALE: 1"=200'

COORDINATE CONTROL

MicroStation v8.11.7.443
E-SHEET NAME:
USER: tvonbehren
DATE PLOTTED: January 2, 2012
FILE NAME: P:\CIVIL\147IN6-2021.00\CONTRACT PLANS AND PROPOSAL\CONTRACT PLAN SET\ROADWAY\R308OCC.DGN

COUNTY OF	ITEM NO.	SHEET NO.
CAMPBELL	6-2021.00	R309

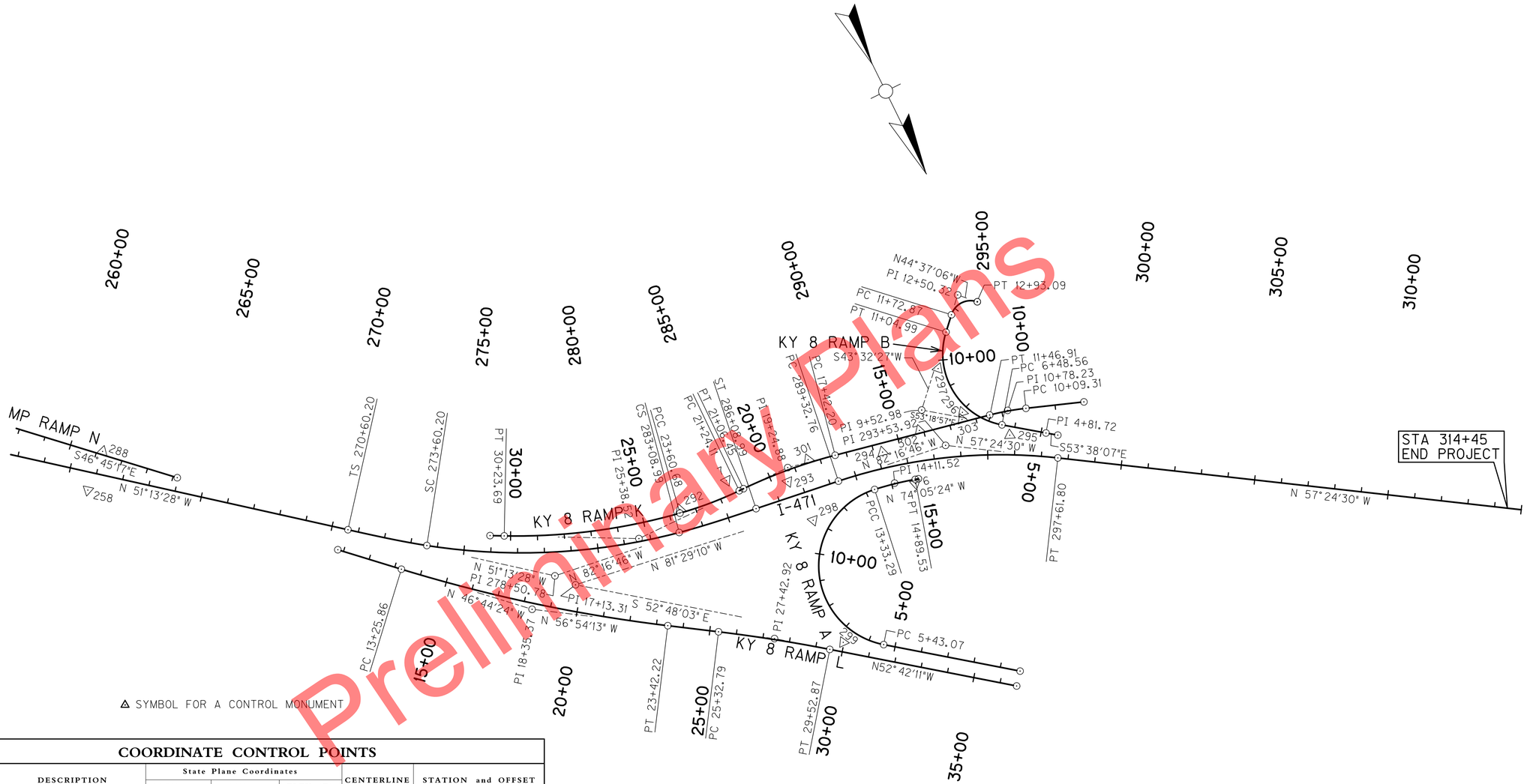

△ SYMBOL FOR A CONTROL MONUMENT

Preliminary Plans

COORDINATE CONTROL POINTS

POINT	DESCRIPTION	State Plane Coordinates			CENTERLINE	STATION and OFFSET
		NORTH (Y)	EAST (X)	ELEV. (Z)		
6	Alum. Disk In Concrete Base	4290175.070	5278950.680	507.57	I-471 B	292+14.65, 80.07' Rt
7	Alum. Disk In Concrete Base	4289853.590	5279577.230	514.51	I-471 B	285+37.29, 134.34' Lt
258	5/8" Rebar & 1½" Aluminum Cap	4288834.242	5281729.055	516.89	I-471 B	260+81.73, 66.67' Rt
288	5/8" Rebar & 1½" Aluminum Cap	4288729.135	5281616.107	516.60	I-471 B	261+03.96, 86.00' Lt
292	5/8" Rebar & 1½" Aluminum Cap	4289873.758	5279780.556	513.19	I-471 B	283+34.45, 82.26' Lt
293	5/8" Rebar & 1½" Aluminum Cap	4289958.473	5279373.479	513.34	I-471 B	287+53.78, 57.87' Lt
294	5/8" Rebar & 1½" Aluminum Cap	4290015.247	5279008.536	513.51	I-471 B	291+17.55, 59.85' Lt
296	5/8" Rebar & 1½" Aluminum Cap	4290013.674	5278675.760	518.44	KY 8 Ramp B	7+96.78, 24.06' Lt
297	5/8" Rebar & 1½" Aluminum Cap	4289827.123	5278684.934	518.13	KY 8 Ramp B	9+71.80, 22.42' Lt
298	5/8" Rebar & 1½" Aluminum Cap	4290129.100	5279352.720	505.75	I-471 B	287+97.28, 108.42' Rt
299	5/8" Rebar & 1½" Aluminum Cap	4290587.265	5279453.297	500.70	KY 8 Ramp A	6+74.09, 53.63' Lt
301	5/8" Rebar & 1½" Aluminum Cap	4289917.553	5279269.700	511.21	KY 8 Ramp K	18+43.19, 12.66' Rt
302	5/8" Rebar & 1½" Aluminum Cap	4290003.422	5278849.464	498.09	KY 8 Ramp K	14+14.89, 10.40' Rt
303	5/8" Rebar & 1½" Aluminum Cap	4290036.857	5278689.001	491.88	KY 8 Ramp K	12+50.98, 9.92' Rt

STATE PLANE COORDINATES

Coordinates for horizontal control were obtained from GPS methods and adjusted to the NAD 83 State Plane Coordinate System, Kentucky Single Zone in U.S. Survey Feet using monuments in the Northern Kentucky Control Network to control the GPS Site Calibration used to determine the coordinates of the monuments for this project. These are State Plane Coordinates and are on the State Plane Grid.

BASIS OF ELEVATIONS

Elevations are NAVD 88 in U.S. Survey Feet. The Origin of Levels for this project is Control Monument 152. Its elevation (676.76) is based on a GPS observation using GEOID03 and a site calibration of the entire project area using Northern Kentucky Control Network monuments. Once the GPS elevation of CP 152 was determined, closed differential levels loops were run from it through all other monuments used for this project.

NOTE

Detailed Alignment Information for all Alignments Is Shown on the Following Sheets in These Plans.

SCALE: 1"=200'

COORDINATE CONTROL

FILE NAME: P:\CIVIL\147\N6-2021.00\CONTRACT PLANS AND PROPOSAL\CONTRACT PLAN SET\ROADWAY\R3090CC.DGN
USER: tvonbehren
DATE PLOTTED: January 2, 2012
E-SHEET NAME:
MicroStation v8.11.7.443

COUNTY OF	ITEM NO.	SHEET NO.
CAMPBELL	6-2021.00	R310

COORDINATE CONTROL POINTS

POINT	DESCRIPTION	State Plane Coordinates			CENTERLINE	STATION and OFFSET
		NORTH (Y)	EAST (X)	ELEV. (Z)		
148	5/8" Rebar & 1 1/2" Aluminum Cap	4270136.571	5284996.159	678.31	I-275 WB	1205+43.08, 240.61' Lt
149	5/8" Rebar & 1 1/2" Aluminum Cap	4269711.443	5284775.636	704.23	I-275 WB	1201+12.30, 219.18' Lt
150	5/8" Rebar & 1 1/2" Aluminum Cap	4271414.444	5286292.597	727.00	I-275 Ramp A	17+38.52, 27.39' Lt
151	5/8" Rebar & 1 1/2" Aluminum Cap	4272158.074	5286528.501	692.64	I-471 SB	67+75.82, 43.47' Rt
152	5/8" Rebar & 1 1/2" Aluminum Cap	4272902.923	5285897.405	676.76	I-471 SB	77+51.21, 84.69' Rt
155	5/8" Rebar & 1 1/2" Aluminum Cap	4272684.225	5286425.529	699.41	I-471 NB	75+56.84, 12.78' Lt
156	5/8" Rebar & 1 1/2" Aluminum Cap	4272375.519	5286996.603	707.37	I-471 NB	69+07.66, 13.38' Lt
226	5/8" Rebar & 1 1/2" Aluminum Cap	4272109.375	5287491.265	710.62	I-471 NB	63+45.95, 12.80' Lt
227	5/8" Rebar & 1 1/2" Aluminum Cap	4273275.439	5285482.863	663.41	I-471 SB	83+06.43, 32.18' Rt
285	5/8" Rebar & 1 1/2" Aluminum Cap	4271670.264	5286860.964	706.08	I-471 SB	61+91.85, 42.95' Lt
286	5/8" Rebar & 1 1/2" Aluminum Cap	4271147.732	5287343.223	726.36	I-471 SB	54+80.78, 42.82' Lt
504	Alum. Disk In Concrete Base	4272397.203	5286189.049	684.25	I-471 SB	71+81.75, 43.87' Lt

STATE PLANE COORDINATES

Coordinates for horizontal control were obtained from GPS methods and adjusted to the NAD 83 State Plane Coordinate System, Kentucky Single Zone in U.S. Survey Feet using monuments in the Northern Kentucky Control Network to control the GPS Site Calibration used to determine the coordinates of the monuments for this project. These are State Plane Coordinates and are on the State Plane Grid.

BASIS OF ELEVATIONS

Elevations are NAVD 88 in U.S. Survey Feet. The Origin of Levels for this project is Control Monument 152. Its elevation (676.76) is based on a GPS observation using GEOID03 and a site calibration of the entire project area using Northern Kentucky Control Network monuments. Once the GPS elevation of CP 152 was determined, closed differential levels loops were run from it through all other monuments used for this project.

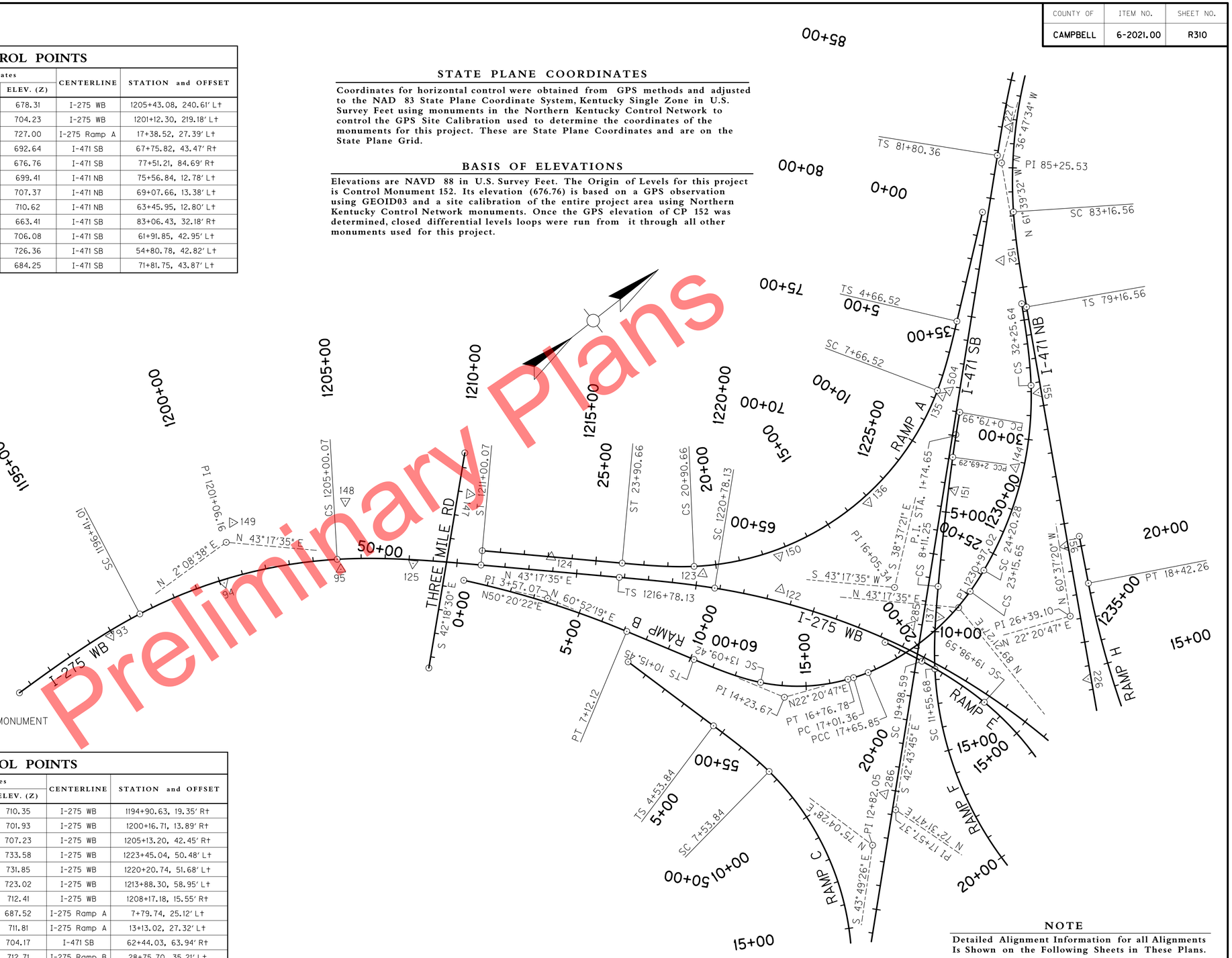

△ SYMBOL FOR A CONTROL MONUMENT

COORDINATE CONTROL POINTS

POINT	DESCRIPTION	State Plane Coordinates			CENTERLINE	STATION and OFFSET
		NORTH (Y)	EAST (X)	ELEV. (Z)		
93	5/8" Rebar & 1 1/2" Aluminum Cap	4269022.612	5284833.154	710.35	I-275 WB	1194+90.63, 19.35' Rt
94	5/8" Rebar & 1 1/2" Aluminum Cap	4269529.357	5284952.328	701.93	I-275 WB	1200+16.71, 13.89' Rt
95	5/8" Rebar & 1 1/2" Aluminum Cap	4269946.370	5285208.111	707.23	I-275 WB	1205+13.20, 42.45' Rt
122	5/8" Rebar & 1 1/2" Aluminum Cap	4271333.198	5286405.930	733.58	I-275 WB	1223+45.04, 50.48' Lt
123	5/8" Rebar & 1 1/2" Aluminum Cap	4271119.431	5286154.736	731.85	I-275 WB	1220+20.74, 51.68' Lt
124	5/8" Rebar & 1 1/2" Aluminum Cap	4270666.286	5285709.711	723.02	I-275 WB	1213+88.30, 58.95' Lt
125	5/8" Rebar & 1 1/2" Aluminum Cap	4270197.785	5285374.914	712.41	I-275 WB	1208+17.18, 15.55' Rt
135	5/8" Rebar & 1 1/2" Aluminum Cap	4272360.711	5286187.518	687.52	I-275 Ramp A	7+79.74, 25.12' Lt
136	5/8" Rebar & 1 1/2" Aluminum Cap	4271844.205	5286347.102	711.81	I-275 Ramp A	13+13.02, 27.32' Lt
137	5/8" Rebar & 1 1/2" Aluminum Cap	4271781.095	5286904.145	704.17	I-471 SB	62+44.03, 63.94' Rt
144	5/8" Rebar & 1 1/2" Aluminum Cap	4272416.780	5286610.272	712.71	I-275 Ramp B	28+75.70, 35.21' Lt
147	5/8" Rebar & 1 1/2" Aluminum Cap	4270561.505	5285292.759	663.42	I-275 WB	1210+26.76, 290.63' Lt

NOTE

Detailed Alignment Information for all Alignments Is Shown on the Following Sheets in These Plans.

SCALE: 1"=200'

COORDINATE CONTROL

MicroStation v8.11.7.443
E-SHEET NAME:
USER: tvonbehren
DATE PLOTTED: January 2, 2012
FILE NAME: P:\CIVIL\147\6-2021.00\CONTRACT PLANS AND PROPOSAL\CONTRACT PLAN SET\ROADWAY\R310OOCC.DGN

COUNTY OF	ITEM NO.	SHEET NO.
CAMPBELL	6-2021.00	R311

I-471

(BEGIN PROJECT TO BEGIN BIFURCATION)

STATION	NORTHING	EASTING
Element: Linear		
POB 15+00.0001	4267925.0163	5289410.1271
TS 15+34.0101	4267958.9743	5289412.0083
Tangent Direction:	N 3°10'15.16" E	
Tangent Length:	34.0100	
Element: Clothoid		
TS 15+34.0101	4267958.9743	5289412.0083
SPI 17+34.0749	4268158.7327	5289423.0747
SC 18+34.0101	4268258.7645	5289420.7538
Entrance Radius:	0.0000	
Exit Radius:	1909.8600	
Length:	300.0000	
Angle:	4°29'59.99" Left	
Constant:	756.9399	
Long Tangent:	200.0648	
Short Tangent:	100.0587	
Long Chord:	299.9178	
Xs:	299.8150	
Ys:	7.8505	
P:	1.9631	
K:	149.9692	
Tangent Direction:	N 3°10'15.16" E	
Radial Direction:	S 86°49'44.84" E	
Chord Direction:	N 1°40'15.45" E	
Radial Direction:	N 88°40'15.17" E	
Tangent Direction:	N 1°19'44.83" W	
Element: Circular		
SC 18+34.0101	4268258.7645	5289420.7538
PI 20+12.2023	4268436.9087	5289416.6206
CC	4268214.4644	5287511.4076
PT 21+89.3657	4268611.2135	5289379.6034
Radius:	1909.8600	
Delta:	10°39'38.39" Left	
Degree of Curvature(Arc):	3°00'00.00"	
Length:	355.3556	
Tangent:	178.1922	
Chord:	354.8432	
Middle Ordinate:	8.2589	
External:	8.2948	
Tangent Direction:	N 1°19'44.83" W	
Radial Direction:	N 88°40'15.17" E	
Chord Direction:	N 6°39'34.02" W	
Radial Direction:	N 78°00'36.78" E	
Tangent Direction:	N 11°59'23.22" W	

I-471 NB

(NB BIFURCATED SECTION THRU I-275 INTERCHANGE)

STATION	NORTHING	EASTING
Element: Clothoid		
CS 21+89.3500	4268612.0291	5289383.5194
SPI 22+89.4084	4268709.9048	5289362.7335
ST 24+89.3500	4268901.7500	5289305.9779
Entrance Radius:	1913.8600	
Exit Radius:	0.0000	
Length:	300.0000	
Angle:	4°29'26.14" Left	
Constant:	757.7321	
Long Tangent:	200.0645	
Short Tangent:	100.0584	
Long Chord:	299.9181	
Xs:	299.8158	
Ys:	7.8341	
P:	1.9590	
K:	149.9693	
Tangent Direction:	N 11°59'23.22" W	
Radial Direction:	N 78°00'36.78" E	
Chord Direction:	N 14°59'00.93" W	
Radial Direction:	N 73°31'10.65" E	
Tangent Direction:	N 16°28'49.35" W	
Element: Linear		
ST 24+89.3500	4268901.7500	5289305.9779
TS 43+27.6438	4270664.5211	5288784.4779
Tangent Direction:	N 16°28'49.35" W	
Tangent Length:	1838.2938	
Element: Clothoid		
TS 43+27.6438	4270664.5211	5288784.4779
SPI 45+27.7086	4270856.3666	5288727.7222
SC 46+27.6438	4270949.7917	5288691.8963
Entrance Radius:	0.0000	
Exit Radius:	1909.8600	
Length:	300.0000	
Angle:	4°29'59.99" Left	
Constant:	756.9399	
Long Tangent:	200.0648	
Short Tangent:	100.0587	
Long Chord:	299.9178	
Xs:	299.8150	
Ys:	7.8505	
P:	1.9631	
K:	149.9692	
Tangent Direction:	N 16°28'49.35" W	
Radial Direction:	N 73°31'10.65" E	
Chord Direction:	N 17°58'49.06" W	
Radial Direction:	N 69°01'10.65" E	
Tangent Direction:	N 20°58'49.35" W	
Element: Circular		
SC 46+27.6438	4270949.7917	5288691.8963
PI 52+51.4847	4271532.2739	5288468.5313
CC	4270265.9699	5286908.6541
CS 58+33.5925	4271870.5905	5287944.3944
Radius:	1909.8600	
Delta:	36°10'42.41" Left	
Degree of Curvature(Arc):	3°00'00.00"	
Length:	1205.9487	
Tangent:	623.8409	
Chord:	1186.0141	
Middle Ordinate:	94.3965	
External:	99.3047	
Tangent Direction:	N 20°58'49.35" W	
Radial Direction:	N 69°01'10.65" E	
Chord Direction:	N 39°04'10.55" W	
Radial Direction:	N 32°50'28.24" E	
Tangent Direction:	N 57°09'31.76" W	

I-471 NB (CONTINUED)

STATION	NORTHING	EASTING
Element: Clothoid		
CS 58+33.5925	4271870.5905	5287944.3944
SPI 59+33.6512	4271924.8535	5287860.3274
ST 61+33.5925	4272019.8284	5287684.2431
Entrance Radius:	1909.8600	
Exit Radius:	0.0000	
Length:	300.0000	
Angle:	4°29'59.99" Left	
Constant:	756.9399	
Long Tangent:	200.0648	
Short Tangent:	100.0587	
Long Chord:	299.9178	
Xs:	299.8150	
Ys:	7.8505	
P:	1.9631	
K:	149.9692	
Tangent Direction:	N 57°09'31.76" W	
Radial Direction:	N 32°50'28.24" E	
Chord Direction:	N 60°09'32.04" W	
Radial Direction:	N 28°20'28.25" E	
Tangent Direction:	N 61°39'31.75" W	
Element: Linear		
ST 61+33.5925	4272019.8284	5287684.2431
TS 79+16.5603	4272866.2405	5286114.9883
Tangent Direction:	N 61°39'31.75" W	
Tangent Length:	1782.9678	
Element: Clothoid		
TS 79+16.5603	4272866.2405	5286114.9883
SPI 81+83.3836	4272992.9071	5285880.1474
SC 83+16.5603	4273068.3254	5285770.0209
Entrance Radius:	0.0000	
Exit Radius:	1889.8600	
Length:	400.0000	
Angle:	6°03'48.58" Right	
Constant:	869.4504	
Long Tangent:	266.8233	
Short Tangent:	133.4757	
Long Chord:	399.8009	
Xs:	399.5523	
Ys:	14.0991	
P:	3.5262	
K:	199.9254	
Tangent Direction:	N 61°39'31.75" W	
Radial Direction:	N 28°20'28.25" E	
Chord Direction:	N 59°38'16.25" W	
Radial Direction:	N 34°24'16.83" E	
Tangent Direction:	N 55°35'43.17" W	
Element: Circular		
SC 83+16.5603	4273068.3254	5285770.0209
PI 86+29.4656	4273245.1277	5285511.8530
CC	4274627.5873	5286837.8567
PT 89+36.7445	4273495.7039	5285324.4464
Radius:	1889.8600	
Delta:	18°48'08.71" Right	
Degree of Curvature(Arc):	3°01'54.29"	
Length:	620.1842	
Tangent:	312.9053	
Chord:	617.4051	
Middle Ordinate:	25.3832	
External:	25.7288	
Tangent Direction:	N 55°35'43.17" W	
Radial Direction:	N 34°24'16.83" E	
Chord Direction:	N 46°11'38.82" W	
Radial Direction:	N 53°12'25.53" E	
Tangent Direction:	N 36°47'34.47" W	

I-471 SB

(SB BIFRUCATED SECTION THRU I-275 INTERCHANGE)

STATION	NORTHING	EASTING
Element: Linear		
POB 19+28.2297	4268354.9431	5289429.9384
PC 21+90.1040	4268611.1045	5289375.5373
Tangent Direction:	N 11°59'23.22" W	
Tangent Length:	261.8743	
Element: Circular		
PC 21+90.1040	4268611.1045	5289375.5373
PI 28+33.5204	4269044.8477	5289283.4232
CC	4268215.1864	5287511.2543
CS 30+61.4357	4269393.3833	5289009.3045
Radius:	1905.8600	
Delta:	26°11'41.30" Left	
Degree of Curvature(Arc):	3°00'22.66"	
Length:	871.3318	
Tangent:	443.4164	
Chord:	863.7630	
Middle Ordinate:	49.5786	
External:	50.9028	
Tangent Direction:	N 11°59'23.22" W	
Radial Direction:	N 78°00'36.78" E	
Chord Direction:	N 25°05'13.87" W	
Radial Direction:	N 51°48'55.48" E	
Tangent Direction:	N 38°11'04.52" W	
Element: Clothoid		
CS 30+61.4357	4269393.3833	5289009.3045
SPI 31+61.4946	4269472.0319	5288947.4484
ST 33+61.4357	4269619.0768	5288811.7877
Entrance Radius:	1905.8600	
Exit Radius:	0.0000	
Length:	300.0000	
Angle:	4°30'33.99" Left	
Constant:	756.1468	
Long Tangent:	200.0650	
Short Tangent:	100.0589	
Long Chord:	299.9174	
Xs:	299.8142	
Ys:	7.8670	
P:	1.9672	
K:	149.9690	
Tangent Direction:	N 38°11'04.52" W	
Radial Direction:	N 51°48'55.48" E	
Chord Direction:	N 41°11'27.47" W	
Radial Direction:	N 47°18'21.49" E	
Tangent Direction:	N 42°41'38.51" W	

I-471 SB (CONTINUED)

STATION	NORTHING	EASTING
Element: Linear		
ST 33+61.4357	4269619.0768	5288811.7877
TS 81+80.3600	4273160.9150	5285544.1565
Tangent Direction:	N 42°41'38.51" W	
Tangent Length:	4818.9243	
Element: Clothoid		
TS 81+80.3600	4273160.9150	5285544.1565
SPI 84+47.1750	4273357.0201	5285363.2338
SC 85+80.3600	4273463.9021	5285283.2964
Entrance Radius:	0.0000	
Exit Radius:	1941.8600	
Length:	400.0000	
Angle:	5°54'04.05" Right	
Constant:	881.3308	
Long Tangent:	266.8150	
Short Tangent:	133.4682	
Long Chord:	399.8114	
Xs:	399.5759	
Ys:	13.7221	
P:	3.4318	
K:	199.9293	
Tangent Direction:	N 42°41'38.51" W	
Radial Direction:	N 47°18'21.49" E	
Chord Direction:	N 40°43'37.80" W	
Radial Direction:	N 53°12'25.53" E	
Tangent Direction:	N 36°47'34.47" W	

I-471 A

(END BIFURCATION TO EQUATION)

STATION	NORTHING	EASTING
Element: Circular		
PC 89+32.7886	4273482.9901	5285308.9802
PI 94+51.0224	4273897.3946	5284998.5973
CC	4274626.8520	5286838.4066
CS 99+44.8860	4274412.9683	5284940.5608
Radius:	1909.8600	
Delta:	30°21'46.98" Right	
Degree of Curvature(Arc):	3°00'00.00"	
Length:	1012.0974	
Tangent:	518.2338	
Chord:	1000.2962	
Middle Ordinate:	66.6516	
External:	69.0618	
Tangent Direction:	N 36°47'34.47" W	
Radial Direction:	N 53°12'25.53" E	
Chord Direction:	N 21°36'41.23" W	
Radial Direction:	N 83°34'12.01" E	
Tangent Direction:	N 6°25'47.99" W	
Element: Clothoid		
CS 99+44.8860	4274412.9683	5284940.5608
SPI 100+78.3588	4274545.6015	5284925.6133
ST 103+44.8860	4274812.4140	5284923.6108
Entrance Radius:	1909.8600	
Exit Radius:	0.0000	
Length:	400.0000	
Angle:	5°59'59.99" Right	
Constant:	874.0389	
Long Tangent:	266.8200	
Short Tangent:	133.4727	
Long Chord:	399.8051	
Xs:	399.5616	
Ys:	13.9517	
P:	3.4893	
K:	199.9269	
Tangent Direction:	N 6°25'47.99" W	
Radial Direction:	N 83°34'12.01" E	
Chord Direction:	N 2°25'47.32" W	
Radial Direction:	N 89°34'12.01" E	
Tangent Direction:	N 0°25'47.99" W	
Element: Linear		
ST 103+44.8860	4274812.4140	5284923.6108
POE 105+37.0000	4275004.5225	5284922.1690
Tangent Direction:	N 0°25'47.99" W	
Tangent Length:	192.1140	

I-471 B

(EQUATION TO NORTH END OF PROJECT)

STATION	NORTHING	EASTING
Element: Linear		
POB 103+00.3724	4275004.5225	5284922.1690
TS 109+95.8878	4275700.0195	5284917.1121
Tangent Direction:	N 0°24'59.72" W	
Tangent Length:	695.5154	
Element: Clothoid		
TS 109+95.8878	4275700.0195	5284917.1121
SPI 112+29.2660	4275933.3916	5284915.4152
SC 113+45.8878	4276049.9333	5284921.6308
Entrance Radius:	0.0000	
Exit Radius:	2890.0000	
Length:	350.0000	
Angle:	3°28'10.08" Right	
Constant:	1005.7336	
Long Tangent:	233.3782	
Short Tangent:	116.7073	
Long Chord:	349.9430	
Xs:	349.8717	
Ys:	7.0627	
P:	1.7659	
K:	174.9786	
Tangent Direction:	N 0°24'59.72" W	
Radial Direction:	N 89°35'00.28" E	
Chord Direction:	N 0°44'23.51" E	
Radial Direction:	S 86°56'49.64" E	
Tangent Direction:	N 3°03'10.36" E	

I-471 B (CONTINUED)

STATION	NORTHING	EASTING
Element: Circular		
SC 113+45.8878	4276049.9333	5284921.6308
PI 119+75.0682	4276678.2208	5284955.1394
CC	4275896.0190	5287807.5293
CS 125+84.9146	4277235.7151	5285246.8040
Radius:	2890.0000	
Delta:	24°33'51.70" Right	
Degree of Curvature(Arc):	1°58'57.19"	
Length:	1239.0268	
Tangent:	629.1804	
Chord:	1229.5593	
Middle Ordinate:	66.1470	
External:	67.6964	
Tangent Direction:	N 3°03'10.36" E	
Radial Direction:	S 86°56'49.64" E	
Chord Direction:	N 15°20'06.21" E	
Radial Direction:	S 62°22'57.94" E	
Tangent Direction:	N 27°37'02.06" E	
Element: Clothoid		
CS 125+84.9146	4277235.7151	5285246.8040
SPI 127+01.6219	4277339.1253	5285300.9051
ST 129+34.9146	4277538.9873	5285421.4064
Entrance Radius:	2890.0000	
Exit Radius:	0.0000	
Length:	350.0000	
Angle:	3°28'10.08" Right	
Constant:	1005.7336	
Long Tangent:	233.3782	
Short Tangent:	116.7073	
Long Chord:	349.9430	
Xs:	349.8717	
Ys:	7.0627	
P:	1.7659	
K:	174.9786	
Tangent Direction:	N 27°37'02.06" E	
Radial Direction:	S 62°22'57.94" E	
Chord Direction:	N 29°55'48.92" E	
Radial Direction:	S 58°54'47.85" E	
Tangent Direction:	N 31°05'12.15" E	
Element: Linear		
ST 129+34.9146	4277538.9873	5285421.4064
TS 146+78.8009	4279032.4287	5286321.8354
Tangent Direction:	N 31°05'12.15" E	
Tangent Length:	1743.8863	
Element: Clothoid		
TS 146+78.8009	4279032.4287	5286321.8354
SPI 150+79.7192	4279375.7699	5286528.8434
SC 152+78.8009	4279565.5295	5286594.6160
Entrance Radius:	0.0000	
Exit Radius:	1436.0000	
Length:	600.0000	
Angle:	11°58'11.53" Left	
Constant:	928.2241	
Long Tangent:	400.9183	
Short Tangent:	200.8351	
Long Chord:	598.8369	
Xs:	597.3866	
Ys:	41.6527	
P:	10.4294	
K:	299.5641	
Tangent Direction:	N 31°05'12.15" E	
Radial Direction:	S 58°54'47.85" E	
Chord Direction:	N 27°05'53.61" E	
Radial Direction:	S 70°52'59.39" E	
Tangent Direction:	N 19°07'00.61" E	
Element: Circular		
SC 152+78.8009	4279565.5295	5286594.6160
PI 160+78.2462	4280320.8875	5286856.4308
CC	4280035.8131	5285237.8075
CS 167+37.7350	4280941.3469	5286352.3050
Radius:	1436.0000	
Delta:	58°12'39.01" Left	
Degree of Curvature(Arc):	3°59'23.84"	
Length:	1458.9340	
Tangent:	799.4452	
Chord:	1396.9925	
Middle Ordinate:	181.3291	
External:	207.5354	
Tangent Direction:	N 19°07'00.61" E	
Radial Direction:	S 70°52'59.39" E	
Chord Direction:	N 9°59'18.89" W	
Radial Direction:	N 50°54'21.60" E	
Tangent Direction:	N 39°05'38.40" W	
Element: Clothoid		
CS 167+37.7350	4280941.3469	5286352.3050
SPI 169+38.5700	4281097.2175	5286225.6594
ST 173+37.7350	4281349.1761	5285913.8063
Entrance Radius:	1436.0000	
Exit Radius:	0.0000	
Length:	600.0000	
Angle:	11°58'11.53" Left	
Constant:	928.2241	
Long Tangent:	400.9183	
Short Tangent:	200.8351	
Long Chord:	598.8369	
Xs:	597.3866	
Ys:	41.6527	
P:	10.4294	
K:	299.5641	
Tangent Direction:	N 39°05'38.40" W	
Radial Direction:	N 50°54'21.60" E	
Chord Direction:	N 47°04'31.40" W	
Radial Direction:	N 38°56'10.07" E	
Tangent Direction:	N 51°03'49.93" W	

Preliminary Plans

MicroStation v8.11.7.443 E-SHEET NAME: USER: tvonbehren DATE PLOTTED: January 2, 2012 FILE NAME: P:\CIVIL\147N6-2021.00\CONTRACT PLANS AND PROPOSAL\CONTRACT PLAN SET\ROADWAY\R311OCC.DGN

ALIGNMENT & COORDINATE INFORMATION

COUNTY OF	ITEM NO.	SHEET NO.
CAMPBELL	6-2021.00	R312

I-471 B (CONTINUED)

STATION	NORTHING	EASTING
Element: Linear		
ST 173+37.7350	4281349.1761	5285913.8063
TS 177+27.2542	4281593.9709	5285610.8200
Tangent Direction:	N 51°03'49.93" W	
Tangent Length:	389.5192	
Element: Clothoid		
TS 177+27.2542	4281593.9709	5285610.8200
SPI 179+60.6330	4281740.6386	5285429.2870
SC 180+77.2542	4281819.3743	5285343.1394
Entrance Radius:	0.0000	
Exit Radius:	2873.0000	
Length:	350.0000	
Angle:	3°29'23.99" Right	
Constant:	1002.7712	
Long Tangent:	233.3788	
Short Tangent:	116.7078	
Long Chord:	349.9423	
Xs:	349.8702	
Ys:	7.1045	
P:	1.7764	
K:	174.9784	
Tangent Direction:	N 51°03'49.93" W	
Radial Direction:	N 38°56'10.07" E	
Chord Direction:	N 49°54'02.07" W	
Radial Direction:	N 42°25'34.05" E	
Tangent Direction:	N 47°34'25.95" W	
Element: Circular		
SC 180+77.2542	4281819.3743	5285343.1394
PI 187+66.3105	4282284.2386	5284834.5140
CC	4283940.0729	5287281.3773
CS 194+29.8187	4282929.2368	5284592.0764
Radius:	2873.0000	
Delta:	26°58'26.32" Right	
Degree of Curvature(Arc):	1°59'39.42"	
Length:	1352.5646	
Tangent:	689.0563	
Chord:	1340.1083	
Middle Ordinate:	79.2290	
External:	81.4759	
Tangent Direction:	N 47°34'25.95" W	
Radial Direction:	N 42°25'34.05" E	
Chord Direction:	N 34°05'12.78" W	
Radial Direction:	N 69°24'00.38" E	
Tangent Direction:	N 20°35'59.62" W	
Element: Clothoid		
CS 194+29.8187	4282929.2368	5284592.0764
SPI 195+46.5266	4283038.4823	5284451.8140
ST 197+79.8187	4283261.5322	5284482.3527
Entrance Radius:	2873.0000	
Exit Radius:	0.0000	
Length:	350.0000	
Angle:	3°29'23.99" Right	
Constant:	1002.7712	
Long Tangent:	233.3788	
Short Tangent:	116.7078	
Long Chord:	349.9423	
Xs:	349.8702	
Ys:	7.1045	
P:	1.7764	
K:	174.9784	
Tangent Direction:	N 20°35'59.62" W	
Radial Direction:	N 69°24'00.38" E	
Chord Direction:	N 18°16'23.50" W	
Radial Direction:	N 72°53'24.37" E	
Tangent Direction:	N 17°06'35.63" W	
Element: Linear		
ST 197+79.8187	4283261.5322	5284482.3527
PC 209+02.0337	4284334.0805	5284152.1909
Tangent Direction:	N 17°06'35.63" W	
Tangent Length:	1122.2150	
Element: Circular		
PC 209+02.0337	4284334.0805	5284152.1909
PI 212+96.7761	4284711.3524	5284036.0556
CC	4282035.4250	5276684.8849
PT 216+90.8477	4285074.9980	5283882.4867
Radius:	7813.0964	
Delta:	5°47'04.60" Left	
Degree of Curvature(Arc):	0°43'59.99"	
Length:	788.8140	
Tangent:	394.7424	
Chord:	788.4791	
Middle Ordinate:	9.9528	
External:	9.9655	
Tangent Direction:	N 17°06'35.63" W	
Radial Direction:	N 72°53'24.37" E	
Chord Direction:	N 20°00'07.93" W	
Radial Direction:	N 67°06'19.77" E	
Tangent Direction:	N 22°53'40.23" W	
Element: Linear		
PT 216+90.8477	4285074.9980	5283882.4867
TS 241+30.2844	4287322.2625	5282933.4589
Tangent Direction:	N 22°53'40.23" W	
Tangent Length:	2439.4367	
Element: Clothoid		
TS 241+30.2844	4287322.2625	5282933.4589
SPI 243+63.6892	4287537.2802	5282842.6561
SC 244+80.2844	4287641.0382	5282789.1725
Entrance Radius:	0.0000	
Exit Radius:	2291.8312	
Length:	350.0000	
Angle:	4°22'30.00" Left	
Constant:	895.6232	
Long Tangent:	233.4048	
Short Tangent:	116.7314	
Long Chord:	349.9093	
Xs:	349.7960	
Ys:	8.9047	
P:	2.2266	
K:	174.9660	
Tangent Direction:	N 22°53'40.23" W	
Radial Direction:	N 67°06'19.77" E	
Chord Direction:	N 24°21'09.96" W	
Radial Direction:	N 62°43'49.77" E	
Tangent Direction:	N 27°16'10.23" W	

I-471 B (CONTINUED)

STATION	NORTHING	EASTING
Element: Circular		
SC 244+80.2844	4287641.0382	5282789.1725
PI 248+75.7406	4287992.5438	5282607.9838
CC	4286590.9748	5280752.0527
CS 252+63.4846	4288263.0030	5282319.4748
Radius:	2291.8312	
Delta:	19°34'48.01" Left	
Degree of Curvature(Arc):	2°30'00.00"	
Length:	783.2002	
Tangent:	395.4562	
Chord:	779.3947	
Middle Ordinate:	33.3746	
External:	33.8678	
Tangent Direction:	N 27°16'10.23" W	
Radial Direction:	N 62°43'49.77" E	
Chord Direction:	N 37°03'34.24" W	
Radial Direction:	N 43°09'01.76" E	
Tangent Direction:	N 46°50'58.24" W	
Element: Clothoid		
CS 252+63.4846	4288263.0030	5282319.4748
SPI 253+80.2159	4288342.8375	5282234.3123
ST 256+13.4846	4288489.0120	5282052.3486
Entrance Radius:	2291.8312	
Exit Radius:	0.0000	
Length:	350.0000	
Angle:	4°22'30.00" Left	
Constant:	895.6232	
Long Tangent:	233.4048	
Short Tangent:	116.7314	
Long Chord:	349.9093	
Xs:	349.7960	
Ys:	8.9047	
P:	2.2266	
K:	174.9660	
Tangent Direction:	N 46°50'58.24" W	
Radial Direction:	N 43°09'01.76" E	
Chord Direction:	N 49°45'58.51" W	
Radial Direction:	N 38°46'31.76" E	
Tangent Direction:	N 51°13'28.24" W	
Element: Linear		
ST 256+13.4846	4288489.0120	5282052.3486
TS 270+60.1990	4289395.0464	5280924.4813
Tangent Direction:	N 51°13'28.24" W	
Tangent Length:	1446.7145	
Element: Clothoid		
TS 270+60.1990	4289395.0464	5280924.4813
SPI 272+60.1990	4289520.3283	5280768.5254
SC 273+60.1990	4289577.7738	5280686.6226
Entrance Radius:	0.0000	
Exit Radius:	2304.0000	
Length:	300.0000	
Angle:	3°43'48.70" Left	
Constant:	831.3844	
Long Tangent:	200.0445	
Short Tangent:	100.0403	
Long Chord:	299.9435	
Xs:	299.8729	
Ys:	6.5084	
P:	1.6274	
K:	149.9788	
Tangent Direction:	N 51°13'28.24" W	
Radial Direction:	N 38°46'31.76" E	
Chord Direction:	N 52°28'04.31" W	
Radial Direction:	N 35°02'43.06" E	
Tangent Direction:	N 54°57'16.94" W	
Element: Circular		
SC 273+60.1990	4289577.7738	5280686.6226
PI 278+41.4153	4289854.0997	5280292.6516
CC	4287691.4928	5279363.6109
CS 283+08.9922	4289949.6334	5279821.0136
Radius:	2304.0000	
Delta:	23°35'40.98" Left	
Degree of Curvature(Arc):	2°29'12.47"	
Length:	948.7931	
Tangent:	481.2163	
Chord:	942.1032	
Middle Ordinate:	49.6671	
External:	49.7173	
Tangent Direction:	N 54°57'16.94" W	
Radial Direction:	N 35°02'43.06" E	
Chord Direction:	N 66°45'07.13" W	
Radial Direction:	N 11°27'02.68" E	
Tangent Direction:	N 78°32'57.32" W	
Element: Clothoid		
CS 283+08.9922	4289949.6334	5279821.0136
SPI 284+09.0325	4289969.4939	5279722.9645
ST 286+08.9922	4289996.3682	5279524.7334
Entrance Radius:	2304.0000	
Exit Radius:	0.0000	
Length:	300.0000	
Angle:	3°43'48.70" Left	
Constant:	831.3844	
Long Tangent:	200.0445	
Short Tangent:	100.0403	
Long Chord:	299.9435	
Xs:	299.8729	
Ys:	6.5084	
P:	1.6274	
K:	149.9788	
Tangent Direction:	N 78°32'57.32" W	
Radial Direction:	N 11°27'02.68" E	
Chord Direction:	N 81°02'09.95" W	
Radial Direction:	N 7°43'13.98" E	
Tangent Direction:	N 82°16'46.02" W	
Element: Linear		
ST 286+08.9922	4289996.3682	5279524.7334
PC 289+32.7637	4290039.8642	5279203.8968
Tangent Direction:	N 82°16'46.02" W	
Tangent Length:	323.7715	

I-471 B (CONTINUED)

STATION	NORTHING	EASTING
Element: Circular		
PC 289+32.7637	4290039.8642	5279203.8968
PI 293+53.9151	4290096.4424	5278786.5631
CC	4291932.4108	5279460.4704
PT 297+61.7988	4290323.2945	5278431.7298
Radius:	1909.8593	
Delta:	24°52'15.80" Right	
Degree of Curvature(Arc):	3°00'00.00"	
Length:	829.0352	
Tangent:	421.1515	
Chord:	822.5416	
Middle Ordinate:	44.8073	
External:	45.8838	
Tangent Direction:	N 82°16'46.02" W	
Radial Direction:	N 7°43'13.98" E	
Chord Direction:	N 69°50'38.12" W	
Radial Direction:	N 32°35'29.78" E	
Tangent Direction:	N 57°24'30.22" W	
Element: Linear		
PT 297+61.7988	4290323.2945	5278431.7298
POE 326+54.5000	4291881.4389	5275994.5408
Tangent Direction:	N 57°24'30.22" W	
Tangent Length:	2892.6984	

I-275 RAMP A

STATION	NORTHING	EASTING
Element: Linear		
POB 0+00.0000	4272966.0535	5285691.2783
TS 4+66.5208	4272601.5719	5285982.4738
Tangent Direction:	S 38°37'20.76" E	
Tangent Length:	466.5208	
Element: Clothoid		
TS 4+66.5208	4272601.5719	5285982.4738
SPI 6+66.7038	4272445.1737	5286101.4251
SC 7+66.5208	4272359.3657	5286159.0999
Entrance Radius:	0.0000	
Exit Radius:	1136.0000	
Length:	300.0000	
Angle:	7°33'55.67" Right	
Constant:	583.7808	
Long Tangent:	200.1830	
Short Tangent:	100.1663	
Long Chord:	299.7676	
Xs:	299.4774	
Ys:	13.1878	
P:	3.2990	
K:	149.9129	
Tangent Direction:	S 38°37'20.76" E	
Radial Direction:	S 51°22'39.24" W	
Chord Direction:	S 36°06'03.54" E	
Radial Direction:	S 58°56'34.91" W	
Tangent Direction:	S 31°03'25.09" E	
Element: Circular		
SC 7+66.5208	4272359.3657	5286159.0999
PI 15+15.3560	4271717.8725	5286545.4166
CC	4271773.3146	5285185.9401
CS 20+90.6554	4271109.9667	5286108.1470
Radius:	1136.0000	
Delta:	66°47'04.62" Right	
Degree of Curvature(Arc):	5°02'37.11"	
Length:	1324.1346	
Tangent:	748.8352	
Chord:	1250.4376	
Middle Ordinate:	187.5289	
External:	224.6065	
Tangent Direction:	S 31°03'25.09" E	
Radial Direction:	S 58°56'34.91" W	
Chord Direction:	S 2°20'07.22" W	
Radial Direction:	N 54°16'20.47" W	
Tangent Direction:	S 35°43'39.53" W	
Element: Clothoid		
CS 20+90.6554	4271109.9667	5286108.1470
SPI 21+90.8218	4271028.6515	5286049.6565
ST 23+90.6554	4270882.9472	5285912.3849
Entrance Radius:	1136.0000	
Exit Radius:	0.0000	
Length:	300.0000	
Angle:	7°33'55.67" Right	
Constant:	583.7808	
Long Tangent:	200.1830	
Short Tangent:	100.1663	
Long Chord:	299.7676	
Xs:	299.4774	
Ys:	13.1878	
P:	3.2990	
K:	149.9129	
Tangent Direction:	S 35°43'39.53" W	
Radial Direction:	N 54°16'20.47" W	
Chord Direction:	S 40°46'17.99" W	
Radial Direction:	N 46°42'24.80" W	
Tangent Direction:	S 43°17'35.20" W	
Element: Linear		
ST 23+90.6554	4270882.9472	5285912.3849
POE 29+75.5613	4270457.2204	5285511.2969
Tangent Direction:	S 43°17'35.20" W	
Tangent Length:	584.9059	

I-275 RAMP B

STATION	NORTHING	EASTING
Element: Circular		
PC 0+00.0000	4270320.3814	5285560.7881
PI 3+57.0683	4270548.2755	5285835.6737
CC	4267338.0938	5288033.2556
PT 7+12.1245	4270722.0829	5286147.5852
Radius:	3873.9043	
Delta:	10°31'56.84" Right	
Degree of Curvature(Arc):	1°28'44.47"	
Length:	712.1245	
Tangent:	357.0683	
Chord:	711.1223	
Middle Ordinate:	16.3519	
External:	16.4212	
Tangent Direction:	N 50°20'22.37" E	
Radial Direction:	S 39°39'37.63" E	
Chord Direction:	N 55°36'20.80" E	
Radial Direction:	S 29°07'40.78" E	
Tangent Direction:	N 60°52'19.22" E	
Element: Linear		
PT 7+12.1245	4270722.0829	5286147.5852
TS 10+15.4453	4270869.7280	5286412.5463
Tangent Direction:	N 60°52'19.22" E	
Tangent Length:	303.3208	
Element: Clothoid		
TS 10+15.4453	4270869.7280	5286412.5463
SPI 12+11.8099	4270965.3109	5286584.0776
SC 13+09.4216	4271028.7021	5286659.2568
Entrance Radius:	0.0000	
Exit Radius:	764.9473	
Length:	293.9763	
Angle:	11°00'34.74" Left	
Constant:	474.2113	
Long Tangent:	196.3646	
Short Tangent:	98.3380	
Long Chord:	293.4942	
Xs:	292.8927	
Ys:	18.7800	
P:	4.7012	
K:	146.8074	
Tangent Direction:	N 60°52'19.22" E	
Radial Direction:	S 29°07'40.78" E	
Chord Direction:	N 57°12'11.77" E	
Radial Direction:	S 40°08'15.52" E	
Tangent Direction:	N 49°51'44.48" E	
Element: Circular		
SC 13+09.4216	4271028.7021	5286659.2568
PI 14+96.7168	4271149.4375	5286802.4436
CC	4271613.5028	5286166.1519
PT 16+76.7846	4271322.6673	5286873.6539
Radius:	764.9473	
Delta:	27°30'57.88" Left	
Degree of Curvature(Arc):	7°29'24.58"	
Length:	367.3630	
Tangent:	187.2952	
Chord:	363.8428	
Middle Ordinate:	21.9473	
External:	22.5956	
Tangent Direction:	N 49°51'44.48" E	
Radial Direction:	S 40°08'15.52" E	
Chord Direction:	N 36°06'15.54" E	
Radial Direction:	S 67°39'13.40" E	
Tangent Direction:	N 22°20'46.60" E	
Element: Linear		
PT 16+76.7846	4271322.6673	5286873.6539
PC 17+01.3565	4271345.3939	5286882.9962
Tangent Direction:	N 22°20'46.60" E	
Tangent Length:	24.5718	
Element: Circular		
PC 17+01.3565	4271345.3939	5286882.9962
PI 17+33.6433	4271375.2561	5286895.2717
CC	4271550.1042	5286385.0068
PCC 17+65.8529	4271406.3712	5286903.8907
Radius:	538.4234	
Delta:	6°51'47.95" Left	
Degree of Curvature(Arc):	10°38'29.04"	
Length:	64.4964	
Tangent:	32.2868	
Chord:	64.4579	
Middle Ordinate:	0.9654	
External:	0.9672	
Tangent Direction:	N 22°20'46.60" E	
Radial Direction:	S 67°39'13.40" E	
Chord Direction:	N 18°54'52.62" E	
Radial Direction:	S 74°31'01.36" E	
Tangent Direction:	N 15°28'58.64" E	
Element: Circular		
PCC 17+65.8529	4271406.3712	5286903.8907
PI 20+47.9461	4271678.2273	5286979.1960
CC	4271672.3748	5285943.6036
CS 23+15.6529	4271949.2149	5286900.8229
Radius:	996.4483	
Delta:	31°36'48.61" Left	
Degree of Curvature(Arc):	5°45'00.00"	
Length:	549.8000	
Tangent:	282.0933	
Chord:	542.8523	
Middle Ordinate:	37.6798	
External:	39.1606	
Tangent Direction:	N 15°28'58.64" E	
Radial Direction:	S 74°31'01.36" E	
Chord Direction:	N 0°19'25.66" W	
Radial Direction:	N 73°52'10.03" E	
Tangent Direction:	N 16°07'49.97" W	

Preliminary Plans

ALIGNMENT & COORDINATE INFORMATION

MicroStation v8.11.7.443 E-SHEET NAME: USER: tvanbehren DATE PLOTTED: January 2, 2012 FILE NAME: P:\CIVIL\147\N6-2021.00\CONTRACT PLANS AND PROPOSAL\CONTRACT PLAN SET\ROADWAY\R312OCC.DGN

COUNTY OF	ITEM NO.	SHEET NO.
CAMPBELL	6-2021.00	R313

I-275 RAMP B (CONTINUED)

	STATION	NORTHING	EASTING
Element: Compound Clothoid			
CS	23+15.6529	4271949.2149	5286900.8229
SPI	23+64.9360	4271996.5577	5286887.1308
SC	24+20.2801	4272048.2043	5286867.0493
Entrance Radius:			996.4483
Exit Radius:			1421.3851
Length:			104.6272
Angle:			5°07'00.42" Left
Constant:			590.5319
Long Tangent:			55.4133
Short Tangent:			49.2830
Long Chord:			104.5923
Xs:			104.5000
Ys:			4.3954
P:			0.1368
K:			15.6307
Tangent Direction:			N 16°07'49.97" W
Radial Direction:			N 73°52'10.03" E
Chord Direction:			N 18°50'19.82" W
Radial Direction:			N 68°45'09.61" E
Tangent Direction:			N 21°14'50.39" W
Element: Circular			
SC	24+20.2801	4272048.2043	5286867.0493
PI	28+34.0887	4272433.8841	5286717.0873
CC		4271533.1020	5285542.2832
CS	32+25.6367	4272678.7996	5286383.5398
Radius:			1421.3851
Delta:			32°27'49.61" Left
Degree of Curvature(Arc):			4°01'51.54"
Length:			805.3566
Tangent:			413.8086
Chord:			794.6269
Middle Ordinate:			56.6589
External:			59.0112
Tangent Direction:			N 21°14'50.39" W
Radial Direction:			N 68°45'09.61" E
Chord Direction:			N 37°28'45.19" W
Radial Direction:			N 36°17'20.00" E
Tangent Direction:			N 53°42'40.00" W
Element: Clothoid			
CS	32+25.6367	4272678.7996	5286383.5398
SPI	33+40.0959	4272746.5431	5286291.2807
ST	35+68.5386	4272858.7725	5286091.9245
Entrance Radius:			1421.3851
Exit Radius:			0.0000
Length:			342.9019
Angle:			6°54'40.17" Left
Constant:			698.1373
Long Tangent:			228.7757
Short Tangent:			114.4593
Long Chord:			342.6802
Xs:			342.4033
Ys:			13.7729
P:			3.4450
K:			171.3678
Tangent Direction:			N 53°42'40.00" W
Radial Direction:			N 36°17'20.00" E
Chord Direction:			N 58°19'07.80" W
Radial Direction:			N 29°22'39.84" E
Tangent Direction:			N 60°37'20.16" W

I-275 RAMP C

	STATION	NORTHING	EASTING
Element: Linear			
POB	0+09.6276	4270648.3670	5286250.7566
TS	4+53.8438	4270762.7808	5286679.9856
Tangent Direction:			N 75°04'28.13" E
Tangent Length:			444.2162
Element: Clothoid			
TS	4+53.8438	4270762.7808	5286679.9856
SPI	6+54.0236	4270814.3397	5286873.4116
SC	7+53.8438	4270827.2846	5286972.7351
Entrance Radius:			0.0000
Exit Radius:			1145.9156
Length:			300.0000
Angle:			7°30'00.00" Right
Constant:			586.3230
Long Tangent:			200.1798
Short Tangent:			100.1635
Long Chord:			299.7716
Xs:			299.4864
Ys:			13.0740
P:			3.2705
K:			149.9144
Tangent Direction:			N 75°04'28.13" E
Radial Direction:			S 14°55'31.87" E
Chord Direction:			N 77°34'26.82" E
Radial Direction:			S 7°25'31.87" E
Tangent Direction:			N 82°34'28.13" E
Element: Circular			
SC	7+53.8438	4270827.2846	5286972.7351
PI	12+41.4568	4270890.3023	5287456.2588
CC		4269690.9790	5287120.8301
CS	16+75.8777	4270585.5842	5287836.9335
Radius:			1145.9156
Delta:			46°06'06.11" Right
Degree of Curvature(Arc):			5°00'00.00"
Length:			922.0340
Tangent:			487.6130
Chord:			897.3617
Middle Ordinate:			91.4925
External:			99.4313
Tangent Direction:			N 82°34'28.13" E
Radial Direction:			S 7°25'31.87" E
Chord Direction:			S 74°22'28.81" E
Radial Direction:			S 38°40'34.24" W
Tangent Direction:			S 51°19'25.76" E

I-275 RAMP C (CONTINUED)

	STATION	NORTHING	EASTING
Element: Clothoid			
CS	16+75.8777	4270585.5842	5287836.9335
SPI	17+76.0412	4270522.9902	5287915.1302
ST	19+75.8777	4270378.5660	5288053.7433
Entrance Radius:			1145.9156
Exit Radius:			0.0000
Length:			300.0000
Angle:			7°30'00.00" Right
Constant:			586.3230
Long Tangent:			200.1798
Short Tangent:			100.1635
Long Chord:			299.7716
Xs:			299.4864
Ys:			13.0740
P:			3.2705
K:			149.9144
Tangent Direction:			S 51°19'25.76" E
Radial Direction:			S 38°40'34.24" W
Chord Direction:			S 46°19'24.45" E
Radial Direction:			S 46°10'34.24" W
Tangent Direction:			S 43°49'25.76" E
Element: Linear			
ST	19+75.8777	4270378.5660	5288053.7433
POE	22+73.5647	4270163.7930	5288259.8746
Tangent Direction:			S 43°49'25.76" E
Tangent Length:			297.6870

I-275 RAMP D

	STATION	NORTHING	EASTING
Element: Linear			
POB	0+00.0000	4271971.8665	5289744.4050
TS	5+06.1540	4271861.9148	5289250.3377
Tangent Direction:			S 77°27'13.06" W
Tangent Length:			506.1540
Element: Clothoid			
TS	5+06.1540	4271861.9148	5289250.3377
SPI	7+12.1242	4271817.1720	5289049.2860
SC	8+14.8407	4271782.0514	5288952.3965
Entrance Radius:			0.0000
Exit Radius:			1198.5568
Length:			308.6867
Angle:			7°22'41.61" Left
Constant:			608.2586
Long Tangent:			205.9702
Short Tangent:			103.0583
Long Chord:			308.4592
Xs:			308.1752
Ys:			13.2346
P:			3.3106
K:			154.2581
Tangent Direction:			S 77°27'13.06" W
Radial Direction:			N 12°32'46.94" W
Chord Direction:			S 74°59'40.43" W
Radial Direction:			N 19°55'28.55" W
Tangent Direction:			S 70°04'31.45" W
Element: Circular			
SC	8+14.8407	4271782.0514	5288952.3965
PI	10+07.4180	4271716.4243	5288771.3466
CC		4270655.2379	5289360.8446
PCC	11+96.7312	4271597.3845	5288619.9679
Radius:			1198.5568
Delta:			18°15'21.18" Left
Degree of Curvature(Arc):			4°46'49.43"
Length:			381.8905
Tangent:			192.8773
Chord:			380.2771
Middle Ordinate:			15.1779
External:			15.3725
Tangent Direction:			S 70°04'31.45" W
Radial Direction:			N 19°55'28.55" W
Chord Direction:			S 60°56'50.85" W
Radial Direction:			N 38°10'49.74" W
Tangent Direction:			S 51°49'10.26" W
Element: Circular			
PCC	11+96.7312	4271597.3845	5288619.9679
PI	12+91.7745	4271538.6344	5288545.2574
CC		4270746.8898	5289288.7722
PT	13+86.3311	4271467.7588	5288481.9338
Radius:			1081.9614
Delta:			10°02'25.26" Left
Degree of Curvature(Arc):			5°17'43.97"
Length:			189.5999
Tangent:			95.0433
Chord:			189.3574
Middle Ordinate:			4.1505
External:			4.1664
Tangent Direction:			S 51°49'10.26" W
Radial Direction:			N 38°10'49.74" W
Chord Direction:			S 46°47'57.63" W
Radial Direction:			N 48°13'15.00" W
Tangent Direction:			S 41°46'45.00" W
Element: Linear			
PT	13+86.3311	4271467.7588	5288481.9338
PC	14+09.7470	4271450.2972	5288466.3327
Tangent Direction:			S 41°46'45.00" W
Tangent Length:			23.4159
Element: Circular			
PC	14+09.7470	4271450.2972	5288466.3327
PI	17+58.8550	4271189.9610	5288233.7355
CC		4270652.3036	5289359.4934
CS	20+89.1403	4270845.4208	5288177.4462
Radius:			1197.7186
Delta:			32°30'01.54" Left
Degree of Curvature(Arc):			4°47'01.47"
Length:			679.3933
Tangent:			349.1080
Chord:			670.3214
Middle Ordinate:			47.8503
External:			49.8415
Tangent Direction:			S 41°46'45.00" W
Radial Direction:			N 48°13'15.00" W
Chord Direction:			S 25°31'44.23" W
Radial Direction:			N 80°43'16.54" W
Tangent Direction:			S 9°16'43.46" W

I-275 RAMP D (CONTINUED)

	STATION	NORTHING	EASTING
Element: Compound Clothoid			
CS	20+89.1403	4270845.4208	5288177.4462
SPI	22+12.2423	4270723.9295	5288157.5975
SC	23+19.4777	4270615.9217	5288165.8397
Entrance Radius:			1197.7186
Exit Radius:			811.3277
Length:			230.3375
Angle:			13°38'33.24" Left
Constant:			761.1047
Long Tangent:			123.1021
Short Tangent:			108.3218
Long Chord:			229.7924
Xs:			228.3677
Ys:			25.5492
P:			0.8783
K:			307.0045
Tangent Direction:			S 9°16'43.46" W
Radial Direction:			N 80°43'16.54" W
Chord Direction:			S 2°53'42.61" W
Radial Direction:			N 85°38'10.21" W
Tangent Direction:			S 4°21'49.79" E
Element: Circular			
SC	23+19.4777	4270615.9217	5288165.8397
PI	25+03.2168	4270432.7153	5288179.8203
CC		4270677.6553	5288974.8153
CS	26+80.8601	4270273.4078	5288271.3691
Radius:			811.3277
Delta:			25°31'14.66" Left
Degree of Curvature(Arc):			7°03'43.12"
Length:			361.3824
Tangent:			183.7391
Chord:			358.4023
Middle Ordinate:			20.0379
External:			20.5453
Tangent Direction:			S 4°21'49.79" E
Radial Direction:			S 85°38'10.21" W
Chord Direction:			S 17°07'27.12" E
Radial Direction:			S 60°06'55.55" W
Tangent Direction:			S 29°53'04.45" E
Element: Clothoid			
CS	26+80.8601	4270273.4078	5288271.3691
SPI	27+91.5988	4270177.3939	5288329.5451
ST	30+11.7601	4270011.9885	5288473.2369
Entrance Radius:			811.3277
Exit Radius:			0.0000
Length:			330.9000
Angle:			11°41'02.55" Left
Constant:			518.1393
Long Tangent:			221.0824
Short Tangent:			110.7387
Long Chord:			330.2888
Xs:			329.5265
Ys:			22.4262
P:			5.6149
K:			165.2209
Tangent Direction:			S 29°53'04.45" E
Radial Direction:			S 60°06'55.55" W
Chord Direction:			S 37°40'31.09" E
Radial Direction:			S 48°25'53.00" W
Tangent Direction:			S 41°34'07.00" E

I-275 RAMP E

	STATION	NORTHING	EASTING
Element: Circular			
PC	0+00.0000	4270989.6258	5288675.7237
PI	10+14.9878	4271929.0382	5288291.4001
CC		4270533.3543	5287560.4473
CS	16+87.0355	4271709.9466	5287300.3404
Radius:			1205.0000
Delta:			80°12'56.80" Left
Degree of Curvature(Arc):			4°45'17.41"
Length:			1687.0355
Tangent:			1014.9878
Chord:			1552.5918
Middle Ordinate:			283.3766
External:			370.5079
Tangent Direction:			N 22°14'59.98" W
Radial Direction:			N 67°45'00.02" E
Chord Direction:			N 62°21'28.38" W
Radial Direction:			N 12°27'56.78" W
Tangent Direction:			S 77°32'03.22" W
Element: Compound Clothoid			
CS	16+87.0355	4271709.9466	5287300.3404
SPI	18+22.1890	4271680.7729	5287168.3732
SC	19+98.5926	4271611.4902	5287005.2173
Entrance Radius:			1205.0000
Exit Radius:			2846.7890
Length:			311.5571
Angle:			10°32'32.23" Left
Constant:			806.8287
Long Tangent:			177.2566
Short Tangent:			135.1535
Long Chord:			311.1130
Xs:			310.1287
Ys:			24.7278
P:			1.9346
K:			89.6606
Tangent Direction:			S 77°32'03.22" W
Radial Direction:			N 12°27'56.78" W
Chord Direction:			S 71°33'02.61" W
Radial Direction:			N 23°00'29.01" W
Tangent Direction:			S 66°59'30.99" W
Element: Circular			
SC	19+98.5926	4271611.4902	5287005.2173
PI	20+84.7677	4271577.8078	5286925.8975
CC		4268991.1636	5288117.9150
PT	21+70.8902	4271539.3892	5286848.7602
Radius:			2846.7890
Delta:			3°28'03.87" Left
Degree of Curvature(Arc):			2°00'45.52"
Length:			172.2976
Tangent:			86.1751
Chord:			172.2713
Middle Ordinate:			1.3034
External:			1.3040
Tangent Direction:			S 66°59'30.99" W
Radial Direction:			N 23°00'29.01" W
Chord Direction:			S 65°15'29.06" W
Radial Direction:			N 26°28'32.88" W
Tangent Direction:			S 63°31'27.12" W

I-275 RAMP F

	STATION	NORTHING	EASTING
Element: Circular			
PC	0+79.9900	4272376.4376	5286287.5667
PI	1+74.6526	4272305.9522	5286350.7554
CC		4275714.0137	5290010.5475
PCC	2+69.2925	4272237.9091	5286416.5668
Radius:			5000.0000
Delta:			2°10'09.29" Left
Degree of Curvature(Arc):			1°08'45.30"
Length:			189.3025
Tangent:			94.6626
Chord:			189.2912
Middle Ordinate:			0.8959
External:			0.8960
Tangent Direction:			S 41°52'32.07" E
Radial Direction:			S 48°07'27.93" W
Chord Direction:			S 42°57'36.72" E
Radial Direction:			S 45°57'18.64" W
Tangent Direction:			S 44°02'41.36" E
Element: Circular			
PCC	2+69.2925	4272237.9091	5286416.5668
PI	5+40.3214	4272043.0946	5286604.9918
CC		4280391.2659	5294846.4073
CS	8+11.2539	4271857.1925	5286802.2151
Radius:			11727.7209
Delta:			2°38'51.91" Left
Degree of Curvature(Arc):			0°29'18.78"
Length:			541.9613
Tangent:			271.0289
Chord:			541.9131
Middle Ordinate:			3.1305
External:			3.1313
Tangent Direction:			S 44°02'41.36" E
Radial Direction:			S 45°57'18.64" W
Chord Direction:			S 45°22'07.32" E
Radial Direction:			S 43°18'26.73" W
Tangent Direction:			S 46°41'33.27" E
Element: Compound Clothoid			
CS	8+11.2539	4271857.1925	5286802.2151
SPI	10+28.5894	4271708.1193	5286960.3667
SC	11+55.6828	4271633.8804	5287064.0866
Entrance Radius:			11727.7209
Exit Radius:			1435.7678
Length:			344.4290
Angle:			7°42'49.49" Left
Constant:			750.6713
Long Tangent:			217.3355
Short Tangent:			127.5509
Long Chord:			344.1583
Xs:			343.7322
Ys:			17.1204
P:			3.0198
K:			151.0178
Tangent Direction:			S 46°41'33.27" E
Radial Direction:			S 43°18'26.73" W
Chord Direction:			S 49°32'38.29" E
Radial Direction:			S 35°35'37.24" W
Tangent Direction:			S 54°24'22.76" E
Element: Circular			
SC	11+55.6828	4271633.8804	5287064.0866
PI	17+65.5665	4271278.9079	5287560.0227
CC		4272801.3965	5287899.7512
CS	23+09.1306	4271389.3787	5288159.8179
Radius:			1435.7678
Delta:			46°01'46.23" Left
Degree of Curvature(Arc):			3°59'26.17"
Length:			1153.4477
Tangent:			609.8837
Chord:			1122.6790
Middle Ordinate:			114.2811
External:			124.1640
Tangent Direction:			S 54°24'22.76" E
Radial Direction:			S 35°35'37.24" W
Chord Direction:			S 77°25'15.88" E
Radial Direction:			S 10°26'09.00" E
Tangent Direction:			N 79°33'51.00" E
Element: Clothoid			
CS	23+09.1306	4271389.3787	5288159.8179
SPI	24+26.8149	4271410.6953	5288275.5555
ST	26+61.6766	4271481.3096	5288499.9223
Entrance Radius:			1435.7678
Exit Radius:			0.0000
Length:			352.5460
Angle:			7°02'03.68" Left
Constant:			711.4592
Long Tangent:			235.2165
Short Tangent:			117.6843
Long Chord:			352.3099
Xs:			352.0150
Ys:			14.4121
P:			3.6050
K:			176.1845
Tangent Direction:			N 79°33'51.00" E
Radial Direction:			S 10°26'09.00" E
Chord Direction:			N 74°52'27.47" E
Radial Direction:			S 17°28'12.67" E
Tangent Direction:			N 72°31'47.33" E

Preliminary Plans

FILE NAME: P:\CIVIL\147N6-2021.00\CONTRACT PLANS AND PROPOSAL\CONTRACT PLAN SET\ROADWAY\R313OCC.DGN
USER: tvonbehren
DATE PLOTTED: January 2, 2012
E-SHEET NAME:
MicroStation v8.11.7.443

ALIGNMENT & COORDINATE INFORMATION

COUNTY OF	ITEM NO.	SHEET NO.
CAMPBELL	6-2021.00	R314

I-275 RAMP G

	STATION	NORTHING	EASTING
	Element: Linear		
POB	0+00.0000	4270134.3698	5288966.5219
TS	4+57.8280	4270581.3862	5288867.6139
	Tangent Direction:	N 12°28'35.04" W	
	Tangent Length:	457.8280	
	Element: Clothoid		
TS	4+57.8280	4270581.3862	5288867.6139
SPI	6+58.1810	4270777.0079	5288824.3302
SC	7+57.8280	4270877.2691	5288820.8703
	Entrance Radius:	0.0000	
	Exit Radius:	818.5111	
	Length:	300.0000	
	Angle:	10°30'00.00" Right	
	Constant:	495.5334	
	Long Tangent:	200.3530	
	Short Tangent:	100.3210	
	Long Chord:	299.5525	
	Xs:	298.9940	
	Ys:	18.2820	
	Ps:	4.5760	
	K:	149.8322	
	Tangent Direction:	N 12°28'35.04" W	
	Radial Direction:	N 77°31'24.96" E	
	Chord Direction:	N 8°58'38.63" W	
	Radial Direction:	N 88°01'24.96" E	
	Tangent Direction:	N 1°58'35.04" W	
	Element: Circular		
SC	7+57.8280	4270877.2691	5288820.8703
PI	12+45.1791	4271364.3303	5288804.0626
CC		4270905.4978	5289638.8945
CS	16+36.9727	4271611.2125	5289224.2534
	Radius:	818.5111	
	Delta:	61°32'24.47" Right	
	Degree of Curvature(Arc):	7°00'00.00"	
	Length:	879.1447	
	Tangent:	487.3511	
	Chord:	837.4908	
	Middle Ordinate:	115.2240	
	External:	134.1019	
	Tangent Direction:	N 1°58'35.04" W	
	Radial Direction:	N 88°01'24.96" E	
	Chord Direction:	N 28°47'37.19" E	
	Radial Direction:	S 30°26'10.57" E	
	Tangent Direction:	N 59°33'49.43" E	
	Element: Clothoid		
CS	16+36.9727	4271611.2125	5289224.2534
SPI	17+37.2936	4271662.0331	5289310.7495
ST	19+36.9727	4271730.3484	5289499.0958
	Entrance Radius:	818.5111	
	Exit Radius:	0.0000	
	Length:	300.0000	
	Angle:	10°30'00.00" Right	
	Constant:	495.5334	
	Long Tangent:	200.3530	
	Short Tangent:	100.3210	
	Long Chord:	299.5525	
	Xs:	298.9940	
	Ys:	18.2820	
	Ps:	4.5760	
	K:	149.8322	
	Tangent Direction:	N 59°33'49.43" E	
	Radial Direction:	S 30°26'10.57" E	
	Chord Direction:	N 66°33'53.01" E	
	Radial Direction:	S 19°56'10.57" E	
	Tangent Direction:	N 70°03'49.43" E	

I-275 RAMP H

	STATION	NORTHING	EASTING
	Element: Circular		
PC	0+00.0000	4271940.3257	5288954.2814
PI	9+39.9271	4271927.2626	5288014.4450
CC		4275707.9618	5288901.9137
PT	18+42.2568	4272357.1468	5287178.5847
	Radius:	3768.0000	
	Delta:	28°00'47.33" Right	
	Degree of Curvature(Arc):	1°31'14.12"	
	Length:	1842.2568	
	Tangent:	939.9271	
	Chord:	1823.9623	
	Middle Ordinate:	112.0303	
	External:	115.4633	
	Tangent Direction:	S 89°12'13.24" W	
	Radial Direction:	N 0°47'46.76" W	
	Chord Direction:	N 76°47'23.09" W	
	Radial Direction:	N 27°13'00.57" E	
	Tangent Direction:	N 62°46'59.43" W	
	Element: Linear		
PT	18+42.2568	4272357.1468	5287178.5847
POE	20+41.4799	4272448.2633	5287001.4191
	Tangent Direction:	N 62°46'59.43" W	
	Tangent Length:	199.2231	

US 27 RAMP A

	STATION	NORTHING	EASTING
	Element: Circular		
PC	10+00.0000	4280437.4500	5286508.4671
PI	10+77.9020	4280361.5753	5286526.1235
CC		4280131.8936	5285195.4057
PCC	11+55.6309	4280284.1719	5286534.9229
	Radius:	1348.1450	
	Delta:	6°36'51.37" Right	
	Degree of Curvature(Arc):	4°14'59.90"	
	Length:	155.6309	
	Tangent:	77.9020	
	Chord:	155.5445	
	Middle Ordinate:	2.2451	
	External:	2.2489	
	Tangent Direction:	S 13°05'59.62" E	
	Radial Direction:	S 76°54'00.38" W	
	Chord Direction:	S 9°47'33.94" E	
	Radial Direction:	S 83°30'51.75" W	
	Tangent Direction:	S 6°29'08.25" E	
	Element: Circular		
PCC	11+55.6309	4280284.1718	5286534.9229
PI	17+69.5284	4279674.2031	5286604.2650
CC		4280140.3538	5285269.8264
PT	22+99.6860	4279240.0865	5286170.1994
	Radius:	1273.2450	
	Delta:	51°28'56.13" Right	
	Degree of Curvature(Arc):	4°29'59.93"	
	Length:	1144.0551	
	Tangent:	613.8975	
	Chord:	1105.9554	
	Middle Ordinate:	126.3498	
	External:	140.2694	
	Tangent Direction:	S 6°29'08.25" E	
	Radial Direction:	S 83°30'51.75" W	
	Chord Direction:	S 19°15'19.82" W	
	Radial Direction:	N 45°00'12.12" W	
	Tangent Direction:	S 44°59'47.88" W	
	Element: Linear		
PT	22+99.6860	4279240.0865	5286170.1994
POE	27+08.1864	4278951.2161	5285881.3630
	Tangent Direction:	S 44°59'47.88" W	
	Tangent Length:	408.5004	

US 27 RAMP B

	STATION	NORTHING	EASTING
	Element: Linear		
POB	9+99.8126	4278172.2263	5286370.8395
PC	24+08.6064	4279545.0622	5286687.1017
	Tangent Direction:	N 12°58'22.73" E	
	Tangent Length:	1408.7938	
	Element: Circular		
PC	24+08.6064	4279545.0622	5286687.1017
PI	25+73.5202	4279705.7667	5286724.1235
CC		4280188.1833	5283895.4325
PT	27+38.0703	4279869.6580	5286742.4596
	Radius:	2864.7900	
	Delta:	6°35'21.40" Left	
	Degree of Curvature(Arc):	2°00'00.00"	
	Length:	329.4640	
	Tangent:	164.9138	
	Chord:	329.2825	
	Middle Ordinate:	4.7349	
	External:	4.7428	
	Tangent Direction:	N 12°58'22.73" E	
	Radial Direction:	S 77°01'37.27" E	
	Chord Direction:	N 9°40'42.03" E	
	Radial Direction:	S 83°36'58.67" E	
	Tangent Direction:	N 6°23'01.33" E	
	Element: Linear		
PT	27+38.0703	4279869.6580	5286742.4596
PC	27+38.0768	4279869.6644	5286742.4604
	Tangent Direction:	N 6°23'01.31" E	
	Tangent Length:	0.0064	
	Non-collinear		
	Element: Circular		
PC	27+38.0768	4279869.6644	5286742.4604
PI	28+17.1539	4279948.4110	5286749.6824
CC		4280002.8406	5285290.3595
PT	28+96.0763	4280027.4769	5286748.3464
	Radius:	1458.1951	
	Delta:	6°12'29.37" Left	
	Degree of Curvature(Arc):	3°55'45.21"	
	Length:	157.9995	
	Tangent:	79.0771	
	Chord:	157.9222	
	Middle Ordinate:	2.1394	
	External:	2.1426	
	Tangent Direction:	N 5°14'24.35" E	
	Radial Direction:	S 84°45'35.65" E	
	Chord Direction:	N 2°08'09.67" E	
	Radial Direction:	N 89°01'54.98" E	
	Tangent Direction:	N 0°58'05.02" W	

US 27 RAMP C

	STATION	NORTHING	EASTING
	Element: Linear		
POB	9+22.5444	4277487.8421	5285491.7025
PC	11+44.7766	4277668.5908	5285620.9971
	Tangent Direction:	N 35°34'37.87" E	
	Tangent Length:	222.2322	
	Element: Circular		
PC	11+44.7766	4277668.5908	5285620.9971
PI	13+76.6412	4277857.1738	5285755.8957
CC		4277113.0134	5286397.6727
PT	15+99.7019	4277962.8969	5285962.2541
	Radius:	954.9300	
	Delta:	27°17'43.83" Right	
	Degree of Curvature(Arc):	5°59'59.99"	
	Length:	454.9253	
	Tangent:	231.8645	
	Chord:	450.6355	
	Middle Ordinate:	26.9628	
	External:	27.7462	
	Tangent Direction:	N 35°34'37.87" E	
	Radial Direction:	S 54°25'22.13" E	
	Chord Direction:	N 49°13'29.78" E	
	Radial Direction:	S 27°07'38.30" E	
	Tangent Direction:	N 62°52'21.70" E	
	Element: Linear		
PT	15+99.7019	4277962.8969	5285962.2541
POE	20+58.7889	4278172.2263	5286370.8395
	Tangent Direction:	N 62°52'21.70" E	
	Tangent Length:	459.0870	

US 27 RAMP D

	STATION	NORTHING	EASTING
	Element: Linear		
POB	9+99.7712	4278951.2161	5285881.3630
PC	12+01.5639	4278808.2162	5285738.9857
	Tangent Direction:	S 44°52'30.00" W	
	Tangent Length:	201.7927	
	Element: Circular		
PC	12+01.5639	4278808.2162	5285738.9857
PI	14+70.6558	4278617.5248	5285549.1245
CC		4278302.8924	5286246.5192
PT	17+16.3732	4278348.9909	5285531.8043
	Radius:	716.2000	
	Delta:	41°11'04.50" Left	
	Degree of Curvature(Arc):	7°59'59.89"	
	Length:	514.8093	
	Tangent:	269.0919	
	Chord:	503.7976	
	Middle Ordinate:	45.7603	
	External:	48.8836	
	Tangent Direction:	S 44°52'30.00" W	
	Radial Direction:	N 45°07'30.00" W	
	Chord Direction:	S 24°16'57.75" W	
	Radial Direction:	N 86°18'34.50" W	
	Tangent Direction:	S 3°41'25.50" W	
	Element: Linear		
PT	17+16.3732	4278348.9909	5285531.8043
PC	20+77.6138	4277988.4993	5285508.5529
	Tangent Direction:	S 3°41'25.50" W	
	Tangent Length:	361.2407	
	Element: Circular		
PC	20+77.6138	4277988.4993	5285508.5529
PI	22+43.7951	4277822.6626	5285497.8566
CC		4278034.5978	5284793.8380
PT	24+04.1972	4277678.4808	5285415.2261
	Radius:	716.2000	
	Delta:	26°07'35.63" Right	
	Degree of Curvature(Arc):	7°59'59.89"	
	Length:	326.5833	
	Tangent:	166.1812	
	Chord:	323.7612	
	Middle Ordinate:	18.5345	
	External:	19.0269	
	Tangent Direction:	S 3°41'25.50" W	
	Radial Direction:	N 86°18'34.50" W	
	Chord Direction:	S 16°45'13.32" W	
	Radial Direction:	N 60°10'58.86" W	
	Tangent Direction:	S 29°49'01.14" W	
	Element: Linear		
PT	24+04.1972	4277678.4808	5285415.2261
POE	25+54.1400	4277548.3877	5285340.6698
	Tangent Direction:	S 29°49'01.14" W	
	Tangent Length:	149.9428	

GA RAMP E

	STATION	NORTHING	EASTING
	Element: Circular		
PC	7+03.0074	4282544.9608	5284847.9256
PI	7+40.4036	4282577.4035	5284829.3260
CC		4282793.6438	5285281.6960
PT	7+77.6608	4282612.2520	5284815.7593
	Radius:	500.0000	
	Delta:	8°33'16.72" Right	
	Degree of Curvature(Arc):	11°27'32.96"	
	Length:	74.6534	
	Tangent:	37.3962	
	Chord:	74.5840	
	Middle Ordinate:	1.3926	
	External:	1.3965	
	Tangent Direction:	N 29°49'33.24" W	
	Radial Direction:	N 60°10'26.76" E	
	Chord Direction:	N 25°32'54.88" W	
	Radial Direction:	N 68°43'43.48" E	
	Tangent Direction:	N 21°16'16.52" W	
	Element: Linear		
PT	7+77.6608	4282612.2520	5284815.7593
PC	9+13.3669	4282738.7129	5284766.5274
	Tangent Direction:	N 21°16'16.52" W	
	Tangent Length:	135.7061	

GA RAMP E (CONTINUED)

	STATION	NORTHING	EASTING
	Element: Circular		
PC	9+13.3669	4282738.7129	5284766.5274
PI	10+58.7079	4282874.1523	5284713.8000
CC		4283778.0121	5287436.1488
PT	12+03.8000	4283014.2328	5284675.0507
	Radius:	2864.7900	
	Delta:	5°48'31.18" Right	
	Degree of Curvature(Arc):	2°00'00.00"	
	Length:	290.4332	
	Tangent:	145.3411	
	Chord:	290.3088	
	Middle Ordinate:	3.6797	
	External:	3.6845	
	Tangent Direction:	N 21°16'16.52" W	
	Radial Direction:	N 68°43'43.48" E	
	Chord Direction:	N 18°22'00.93" W	
	Radial Direction:	N 74°32'14.66" E	
	Tangent Direction:	N 15°27'45.34" W	
	Element: Linear		
PT	12+03.8000	4283014.2328	5284675.0507
PC	21+80.2470	4283955.3370	5284414.7210
	Tangent Direction:	N 15°27'45.34" W	
	Tangent Length:	976.4470	
	Element: Circular		
PC	21+80.2470	4283955.3370	5284414.7210
PI	23+02.9440	4284073.5929	5284382.0088
CC		4284050.8097	5284753.8594
PT	24+16.6625	4284187.0615	5284428.6932
	Radius:	358.1000	
	Delta:	37°49'34.83" Right	
	Degree of Curvature(Arc):	15°59'59.78"	
	Length:	236.4155	
	Tangent:	122.6970	
	Chord:	232.1454	
	Middle Ordinate:	19.3335	
	External:	20.4369	
	Tangent Direction:	N 15°27'45.34" W	
	Radial Direction:	N 74°32'14.66" E	
	Chord Direction:	N 3°27'02.08" E	
	Radial Direction:	S 67°38'10.51" E	
	Tangent Direction:	N 22°21'49.49" E	
	Element: Linear		
PT	24+16.6625	4284187.0615	5284428.6932
PC	27+60.1843	4284504.7460	5284559.3982
	Tangent Direction:	N 22°21'49.49" E	
	Tangent Length:	343.5218	
	Element: Circular		
PC	27+60.1843	4284504.7460	5284559.3982
PI	32+64.9035	4284971.5037	5284751.4365
CC		4284686.4163	5284117.6402
PT	35+36.6789	4285137.3677	5284274.7494
	Radius:	477.4700	
	Delta:	93°10'42.00" Left	
	Degree of Curvature(Arc):	11°59'59.53"	
	Length:	776.4945	
	Tangent:	504.7192	
	Chord:	693.7111	
	Middle Ordinate:	149.3407	
	External:	217.3099	
	Tangent Direction:	N 22°21'49.49" E	
	Radial Direction:	S 67°38'10.51" E	
	Chord Direction:	N 24°13'31.51" W	
	Radial Direction:	N 19°11'07.49" E	
	Tangent Direction:	N 70°48'52.51" W	
	Element: Linear		
PT	35+36.6789	4285137.3677	5284274.7494
PC	42+17.9820	4285361.2618	5283631.2858
	Tangent Direction:	N 70°48'52.51" W	
	Tangent Length:	681.3031	
	Element: Circular		
PC	42+17.9820	4285361.2618	5283631.2858
PI	44+83.1242	4285448.3945	5283380.8695
CC		4289960.6689	5285231.6561
PT	47+47.7434	4285562.1995	5283141.3934
	Radius:	4869.8800	
	Delta:	6°13'58.16" Right	
	Degree of Curvature(Arc):	1°10'35.52"	
	Length:	529.7614	
	Tangent:	265.1422	
	Chord:	529.5003	
	Middle Ordinate:	7.2019	
	External:	7.2125	
	Tangent Direction:	N 70°48'52.51" W	
	Radial Direction:	N 19°11'07.49" E	
	Chord Direction:	N 67°41'53.43" W	
	Radial Direction:	N 25°25'05.65" E	
	Tangent Direction:	N 64°34'54.35" W	
	Element: Linear		
PT	47+47.7434	4285562.1995	5283141.3934
POE	48+47.8285	4285605.1583	5283050.9967
	Tangent Direction:	N 64°34'54.35" W	
	Tangent Length:	100.0851	

Preliminary Plans

ALIGNMENT & COORDINATE INFORMATION

MicroStation v8.11.7.443
E-SHEET NAME:
USER: tvonbehren
DATE PLOTTED: January 2, 2012
FILE NAME: P:\CIVIL\147\6-2021.00\CONTRACT PLANS AND PROPOSAL\CONTRACT PLAN SET\ROADWAY\R314OCC.DGN

COUNTY OF	ITEM NO.	SHEET NO.
CAMPBELL	6-2021.00	R315

GA RAMP EE

	STATION	NORTHING	EASTING
	Element: Linear		
POB	14+93.7022	4283270.5988	5284604.1343
PC	18+61.1765	4283627.8145	5284517.9117
	Tangent Direction:	N 13°34'12.52" W	
	Tangent Length:	367.4743	
	Element: Circular		
PC	18+61.1765	4283627.8145	5284517.9117
PI	20+16.1057	4283778.4186	5284481.5598
CC		4283785.9589	5285173.0960
PCC	21+65.7443	4283929.7796	5284514.6192
	Radius:	674.0000	
	Delta:	25°53'27.13" Right	
	Degree of Curvature(Arc):	8°30'03.09"	
	Length:	304.5678	
	Tangent:	154.9292	
	Chord:	301.9830	
	Middle Ordinate:	17.1305	
	External:	17.5772	
	Tangent Direction:	N 13°34'12.52" W	
	Radial Direction:	N 76°25'47.48" E	
	Chord Direction:	N 0°37'28.96" W	
	Radial Direction:	S 77°40'45.39" E	
	Tangent Direction:	N 12°19'14.61" E	
	Element: Circular		
PCC	21+65.7443	4283929.7796	5284514.6192
PI	23+17.1834	4284077.7309	5284546.9339
CC		4283853.3882	5284864.3739
PCC	24+52.2786	4284157.5801	5284675.6115
	Radius:	358.0000	
	Delta:	45°51'29.27" Right	
	Degree of Curvature(Arc):	16°00'15.87"	
	Length:	286.5344	
	Tangent:	151.4392	
	Chord:	278.9473	
	Middle Ordinate:	28.2863	
	External:	30.7130	
	Tangent Direction:	N 12°19'14.61" E	
	Radial Direction:	S 77°40'45.39" E	
	Chord Direction:	N 35°14'59.25" E	
	Radial Direction:	S 31°49'16.12" E	
	Tangent Direction:	N 58°10'43.88" E	
	Element: Circular		
PCC	24+52.2786	4284157.5801	5284675.6115
PI	25+01.1765	4284183.3625	5284717.1599
CC		4284083.6564	5284721.4839
PT	25+41.3742	4284161.2739	5284760.7844
	Radius:	87.0000	
	Delta:	58°40'32.99" Right	
	Degree of Curvature(Arc):	65°51'25.98"	
	Length:	89.0955	
	Tangent:	48.8979	
	Chord:	85.2529	
	Middle Ordinate:	11.1582	
	External:	12.7998	
	Tangent Direction:	N 58°10'43.88" E	
	Radial Direction:	S 31°49'16.12" E	
	Chord Direction:	N 87°31'00.38" E	
	Radial Direction:	S 26°51'16.87" W	
	Tangent Direction:	S 63°08'43.13" E	
	Element: Linear		
PT	25+41.3742	4284161.2735	5284760.7841
POE	25+51.6827	4284156.6168	5284769.9810
	Tangent Direction:	S 63°08'43.13" E	
	Tangent Length:	10.3086	

GA RAMP F

	STATION	NORTHING	EASTING
	Element: Linear		
POB	7+47.5168	4285600.4522	5282905.0514
PC	10+79.4165	4285414.2461	5283179.7962
	Tangent Direction:	S 55°52'22.23" E	
	Tangent Length:	331.8997	
	Element: Circular		
PC	10+79.4165	4285414.2461	5283179.7962
PI	11+65.4834	4285365.9599	5283251.0419
CC		4284939.9529	5282858.3476
PT	12+50.2728	4285298.8727	5283304.9568
	Radius:	572.9600	
	Delta:	17°05'08.02" Right	
	Degree of Curvature(Arc):	9°59'59.86"	
	Length:	170.8563	
	Tangent:	86.0669	
	Chord:	170.2239	
	Middle Ordinate:	6.3569	
	External:	6.4282	
	Tangent Direction:	S 55°52'22.23" E	
	Radial Direction:	S 34°07'37.77" W	
	Chord Direction:	S 47°19'48.22" E	
	Radial Direction:	S 51°12'45.79" W	
	Tangent Direction:	S 38°47'14.21" E	
	Element: Linear		
PT	12+50.2728	4285298.8727	5283304.9568
PC	17+00.5891	4284947.8615	5283587.0488
	Tangent Direction:	S 38°47'14.21" E	
	Tangent Length:	450.3163	
	Element: Circular		
PC	17+00.5891	4284947.8615	5283587.0488
PI	19+43.7843	4284758.2965	5283739.3937
CC		4283751.4664	5282098.3568
PT	21+84.3758	4284536.6017	5283839.3702
	Radius:	1909.8600	
	Delta:	14°30'48.94" Right	
	Degree of Curvature(Arc):	3°00'00.00"	
	Length:	483.7867	
	Tangent:	243.1951	
	Chord:	482.4943	
	Middle Ordinate:	15.2980	
	External:	15.4216	
	Tangent Direction:	S 38°47'14.21" E	
	Radial Direction:	S 51°12'45.79" W	
	Chord Direction:	S 31°31'49.74" E	
	Radial Direction:	S 65°43'34.73" W	
	Tangent Direction:	S 24°16'25.27" E	

GA RAMP F (CONTINUED)

	STATION	NORTHING	EASTING
	Element: Linear		
PT	21+84.3758	4284536.6017	5283839.3702
PC	33+12.1974	4283508.4884	5284303.0129
	Tangent Direction:	S 24°16'25.27" E	
	Tangent Length:	1127.8216	
	Element: Circular		
PC	33+12.1974	4283508.4884	5284303.0129
PI	34+61.3524	4283372.5198	5284364.3299
CC		4283330.7854	5281691.4927
PT	36+10.2383	4283230.9188	5284411.1952
	Radius:	2864.7900	
	Delta:	5°57'38.93" Right	
	Degree of Curvature(Arc):	2°00'00.00"	
	Length:	298.0409	
	Tangent:	149.1550	
	Chord:	297.9065	
	Middle Ordinate:	3.8750	
	External:	3.8802	
	Tangent Direction:	S 24°16'25.27" E	
	Radial Direction:	S 65°43'34.73" W	
	Chord Direction:	S 21°17'35.80" E	
	Radial Direction:	S 71°41'13.66" W	
	Tangent Direction:	S 18°18'46.34" E	
	Element: Linear		
PT	36+10.2383	4283230.9188	5284411.1952
POE	38+03.2821	4283047.6517	5284471.8507
	Tangent Direction:	S 18°18'46.34" E	
	Tangent Length:	193.0438	

GA RAMP H

	STATION	NORTHING	EASTING
	Element: Linear		
POB	6+82.9830	4286449.7627	5283228.0279
PC	11+40.6457	4286015.6305	5283372.8878
	Tangent Direction:	S 18°27'09.60" E	
	Tangent Length:	457.6627	
	Element: Circular		
PC	11+40.6457	4286015.6305	5283372.8878
PI	12+81.4267	4285882.0876	5283417.4480
CC		4285707.0224	5282448.0169
PT	14+20.2752	4285741.3941	5283422.4109
	Radius:	975.0000	
	Delta:	16°25'56.64" Right	
	Degree of Curvature(Arc):	5°52'35.36"	
	Length:	279.6295	
	Tangent:	140.7811	
	Chord:	278.6721	
	Middle Ordinate:	10.0075	
	External:	10.1113	
	Tangent Direction:	S 18°27'09.60" E	
	Radial Direction:	S 71°32'50.40" W	
	Chord Direction:	S 10°14'11.28" E	
	Radial Direction:	S 87°58'47.04" W	
	Tangent Direction:	S 2°01'12.96" E	
	Element: Linear		
PT	14+20.2752	4285741.3941	5283422.4109
POE	17+83.9164	4285377.9789	5283435.2304
	Tangent Direction:	S 2°01'12.96" E	
	Tangent Length:	363.6412	

GA RAMP K

	STATION	NORTHING	EASTING
	Element: Linear		
POB	9+99.7986	4284253.5198	5284662.6427
PC	14+12.1198	4284665.6184	5284676.1900
	Tangent Direction:	N 1°52'58.32" E	
	Tangent Length:	412.3212	
	Element: Circular		
PC	14+12.1198	4284665.6184	5284676.1900
PI	17+52.6860	4285006.0008	5284687.3798
CC		4284684.1165	5284113.4940
PT	20+24.6913	4285173.9222	5284391.0898
	Radius:	563.0000	
	Delta:	62°20'26.18" Left	
	Degree of Curvature(Arc):	10°10'36.73"	
	Length:	612.5715	
	Tangent:	340.5662	
	Chord:	582.7991	
	Middle Ordinate:	81.2788	
	External:	94.9927	
	Tangent Direction:	N 1°52'58.32" E	
	Radial Direction:	S 88°07'01.68" E	
	Chord Direction:	N 29°17'14.77" W	
	Radial Direction:	N 29°32'32.14" E	
	Tangent Direction:	N 60°27'27.86" W	
	Element: Linear		
PT	20+24.6913	4285173.9222	5284391.0898
PC	24+05.6966	4285361.7827	5284059.6181
	Tangent Direction:	N 60°27'27.86" W	
	Tangent Length:	381.0053	
	Element: Circular		
PC	24+05.6966	4285361.7827	5284059.6181
PI	27+20.2581	4285516.8821	5283785.9520
CC		4286192.5641	5284530.4609
PT	30+13.4399	4285804.2636	5283658.0427
	Radius:	954.9297	
	Delta:	36°27'52.55" Right	
	Degree of Curvature(Arc):	6°00'00.00"	
	Length:	607.7433	
	Tangent:	314.5615	
	Chord:	597.5384	
	Middle Ordinate:	47.9414	
	External:	50.4755	
	Tangent Direction:	N 60°27'27.86" W	
	Radial Direction:	N 29°32'32.14" E	
	Chord Direction:	N 42°13'31.59" W	
	Radial Direction:	N 66°00'24.68" E	
	Tangent Direction:	N 23°59'35.32" W	
	Element: Linear		
PT	30+13.4399	4285804.2636	5283658.0427
POE	31+63.4637	4285941.3245	5283597.0390
	Tangent Direction:	N 23°59'35.32" W	
	Tangent Length:	150.0238	

MP RAMP A

	STATION	NORTHING	EASTING
	Element: Linear		
POB	9+95.9345	4288147.7066	5281905.8734
PC	20+41.7603	4287456.2725	5282690.5200
	Tangent Direction:	S 48°36'48.07" E	
	Tangent Length:	1045.8258	
	Element: Circular		
PC	20+41.7603	4287456.2725	5282690.5200
PI	22+50.1095	4287318.5251	5282846.8372
CC		4286739.8217	5282059.1805
PT	24+52.0293	4287128.1845	5282931.5712
	Radius:	954.9300	
	Delta:	24°36'58.06" Right	
	Degree of Curvature(Arc):	5°59'59.99"	
	Length:	410.2690	
	Tangent:	208.3492	
	Chord:	407.1209	
	Middle Ordinate:	21.9485	
	External:	22.4649	
	Tangent Direction:	S 48°36'48.07" E	
	Radial Direction:	S 41°23'11.93" W	
	Chord Direction:	S 36°18'19.04" E	
	Radial Direction:	S 66°00'09.99" W	
	Tangent Direction:	S 23°59'50.01" E	
	Element: Linear		
PT	24+52.0293	4287128.1845	5282931.5712
POE	26+20.7800	4286974.0197	5283000.2009
	Tangent Direction:	S 23°59'50.01" E	
	Tangent Length:	168.7507	

MP RAMP D

	STATION	NORTHING	EASTING
	Element: Linear		
POB	9+97.6427	4287053.8802	5283146.9216
POE	19+64.8874	4287972.4608	5282843.9825
	Tangent Direction:	N 18°15'07.42" W	
	Tangent Length:	967.2447	

MP RAMP M

	STATION	NORTHING	EASTING
	Element: Linear		
POB	9+97.9299	4287992.1417	5282934.7754
PC	12+72.5820	4288195.6897	5282750.3792
	Tangent Direction:	N 42°10'25.53" W	
	Tangent Length:	274.6521	
	Element: Circular		
PC	12+72.5820	4288195.6897	5282750.3792
PI	14+34.0509	4288315.3563	5282641.9720
CC		4287811.0151	5282325.7515
PT	15+87.3562	4288360.8076	5282487.0320
	Radius:	572.9600	
	Delta:	31°28'38.29" Left	
	Degree of Curvature(Arc):	9°59'59.86"	
	Length:	314.7742	
	Tangent:	161.4689	
	Chord:	310.8306	
	Middle Ordinate:	21.4809	
	External:	22.3176	
	Tangent Direction:	N 42°10'25.53" W	
	Radial Direction:	N 47°49'34.47" E	
	Chord Direction:	N 57°54'44.67" W	
	Radial Direction:	N 16°20'56.18" E	
	Tangent Direction:	N 73°39'03.82" W	
	Element: Linear		
PT	15+87.3562	4288360.8076	5282487.0320
PC	17+49.6179	4288406.4820	5282331.3314
	Tangent Direction:	N 73°39'03.82" W	
	Tangent Length:	162.2616	
	Element: Circular		
PC	17+49.6179	4288406.4820	5282331.3314
PI	18+57.3161	4288436.7976	5282227.9879
CC		4288956.2745	5282492.6119
PT	19+62.5300	4288502.5689	5282142.7057
	Radius:	572.9600	
	Delta:	21°17'28.08" Right	
	Degree of Curvature(Arc):	9°59'59.86"	
	Length:	212.9121	
	Tangent:	107.6982	
	Chord:	211.6892	
	Middle Ordinate:	9.8614	
	External:	10.0341	
	Tangent Direction:	N 73°39'03.82" W	
	Radial Direction:	N 16°20'56.18" E	
	Chord Direction:	N 63°00'19.78" W	
	Radial Direction:	N 37°38'24.26" E	
	Tangent Direction:	N 52°21'35.74" W	
	Element: Linear		
PT	19+62.5300	4288502.5689	5282142.7057
POE	22+91.5932	4288703.5275	5281882.1328
	Tangent Direction:	N 52°21'35.74" W	
	Tangent Length:	329.0632	

MP RAMP N

	STATION	NORTHING	EASTING
	Element: Linear		
POB	5+84.1404	4288939.9603	5281409.6610
PC	13+08.0944	4288443.9634	5281937.0095
	Tangent Direction:	S 46°45'17.26" E	
	Tangent Length:	723.9540	
	Element: Circular		
PC	13+08.0944	4288443.9634	5281937.0095
PI	14+30.5256	4288360.0831	5282026.1919
CC		4287922.2631	5281446.3251
PT	15+50.6127	4288251.3410	5282082.4463
	Radius:	716.2000	
	Delta:	19°24'04.98" Right	
	Degree of Curvature(Arc):	7°59'59.89"	
	Length:	242.5182	
	Tangent:	122.4312	
	Chord:	241.3612	
	Middle Ordinate:	10.2406	
	External:	10.3892	
	Tangent Direction:	S 46°45'17.26" E	
	Radial Direction:	S 43°14'42.74" W	
	Chord Direction:	S 37°03'14.77" E	
	Radial Direction:	S 62°38'47.72" W	
	Tangent Direction:	S 27°21'12.28" E	
	Element: Linear		
PT	15+50.6127	4288251.3410	5282082.4463
POE	17+24.8554	4288096.5805	5282162.5069
	Tangent Direction:	S 27°21'12.28" E	
	Tangent Length:	174.2427	

KY 8 RAMP A

	STATION	NORTHING	EASTING
	Element: Linear		
POB	0+25.0227	4290974.7215	5278909.1767
PC	5+43.0715	4290661.5162	5279321.8231
	Tangent Direction:	S 52°48'03.30" E	
	Tangent Length:	518.0488	
	Element: Circular		
PC	5+43.0715	4290661.5162	5279321.8231
PI	17+13.3062	4289954.0082	5280253.9614
CC		4290423.1780	5279140.9206
PCC	13+33.2855	4290127.2583	5279096.6223
	Radius:	299.2170	
	Delta:	151°18'52.91" Right	
	Degree of Curvature(Arc):	19°08'54.86"	
	Length:	790.2140	
	Tangent:	1170.2347	
	Chord:	579.7818	
	Middle Ordinate:	225.0949	
	External:	908.6655	
	Tangent Direction:	S 52°48'03.30" E	
	Radial Direction:	S 37°11'56.70" W	
	Chord Direction:	S 22°51'23.15" W	
	Radial Direction:	N 8°30'49.61" E	
	Tangent Direction:	N 81°29'10.39" W	
	Element: Circular		
PCC	13+33.2855	4290127.2583	5279096.6223
PI	14+11.5151	4290138.8400	5279019.2548
CC		4291324.2899	5279275.8142
PT	14+89.5274	4290160.2846	5278944.0219
	Radius:	1210.3695	
	Delta:	7°23'45.91" Right	
	Degree of Curvature(Arc):	4°44'01.47"	
	Length:	156.2418	
	Tangent:	78.2296	
	Chord:	156.1334	
	Middle Ordinate:	2.5202	
	External:	2.5255	
	Tangent Direction:	N 81°29'10.39" W	
	Radial Direction:	N 8°30'49.61" E	
	Chord Direction:	N 77°47'17.44" W	
	Radial Direction:	N 15°54'35.52" E	
	Tangent Direction:	N 74°05'24.48" W	

KY 8 RAMP B

	STATION	NORTHING	EASTING
	Element: Linear		
POB	4+36.9264	4290246.9271	5278394.2756
PI	4+81.7183	4290220.3689	5278430.3448
	Tangent Direction:	S 53°38'06.79" E	
	Tangent Length:	44.7920	
	Element: Linear		
PI	4+81.7183	4290220.3689	5278430.3448
PC	6+48.5640	4290120.6948	5278564.1452
	Tangent Direction:	S 53°18'57.16" E	
	Tangent Length:	166.8457	
	Element: Circular		
PC	6+48.5640	4290120.6948	5278564.1452
PI	9+52.9760	4289938.8381	5278808.2657
CC		4289904.1706	5278402.8464
PT	11+04.9908	4289718.1751	5278598.5647
	Radius:	270.0000	
	Delta:	96°51'24.44" Right	
	Degree of Curvature(Arc):	21°13'14.37"	
	Length:	456.4269	
	Tangent:	304.4120	
	Chord:	403.9886	
	Middle Ordinate:	90.8400	
	External:	136.8989	
	Tangent Direction:	S 53°18'57.16" E	
	Radial Direction:	S 36°41'02.84" W	
	Chord Direction:	S 4°53'14.94" E	
	Radial Direction:	N 46°27'32.73" W	
	Tangent Direction:	S 43°32'27.27" W	

Preliminary Plans

ALIGNMENT & COORDINATE INFORMATION

MicroStation v8.11.7.443 E-SHEET NAME: USER: tvonbehren DATE PLOTTED: January 2, 2012 FILE NAME: P:\CIVIL\147N6-2021.00\CONTRACT PLANS AND PROPOSAL\CONTRACT PLAN SET\ROADWAY\R315OCC.DGN

COUNTY OF	ITEM NO.	SHEET NO.
CAMPBELL	6-2021.00	R316

KY 8 RAMP B (CONTINUED)

STATION	NORTHING	EASTING
Element: Linear		
PT 11+04.9908	4289718.1751	5278598.5647
PC 11+72.8686	4289668.9717	5278551.8056
Tangent Direction:	S 43°32'27.27" W	
Tangent Length:	67.8778	
Element: Circular		
PC 11+72.8686	4289668.9717	5278551.8056
PI 12+50.3178	4289612.8301	5278498.4530
CC	4289720.6371	5278497.4394
PT 12+93.0880	4289667.9586	5278444.0542
Radius:	75.5000	
Delta:	91°50'26.89" Right	
Degree of Curvature(Arc):	76°23'39.74"	
Length:	120.2193	
Tangent:	77.4492	
Chord:	107.7561	
Middle Ordinate:	22.8257	
External:	32.8117	
Tangent Direction:	S 43°32'27.27" W	
Radial Direction:	N 46°27'32.73" W	
Chord Direction:	S 89°27'40.72" W	
Radial Direction:	N 45°22'54.16" E	
Tangent Direction:	N 44°37'05.84" W	

KY 8 RAMP K

STATION	NORTHING	EASTING
Element: Linear		
POB 7+91.8818	4290178.6614	5278252.2265
PC 10+09.3062	4290104.7938	5278456.7185
Tangent Direction:	S 70°08'20.45" E	
Tangent Length:	217.4244	
Element: Circular		
PC 10+09.3062	4290104.7938	5278456.7185
PI 10+78.2255	4290081.3792	5278521.5385
CC	4291002.9243	5278781.1456
PT 11+46.9063	4290067.5152	5278589.0489
Radius:	954.9300	
Delta:	8°15'21.61" Left	
Degree of Curvature(Arc):	5°59'59.99"	
Length:	137.6001	
Tangent:	68.9193	
Chord:	137.4811	
Middle Ordinate:	2.4774	
External:	2.4838	
Tangent Direction:	S 70°08'20.45" E	
Radial Direction:	S 19°51'39.55" W	
Chord Direction:	S 74°16'01.26" E	
Radial Direction:	S 11°36'17.94" W	
Tangent Direction:	S 78°23'42.06" E	
Element: Linear		
PT 11+46.9063	4290067.5152	5278589.0489
PC 17+42.2009	4289947.7639	5279172.1744
Tangent Direction:	S 78°23'42.06" E	
Tangent Length:	595.2946	
Element: Circular		
PC 17+42.2009	4289947.7639	5279172.1744
PI 19+24.8781	4289911.0160	5279351.1173
CC	4291818.5821	5279556.3677
PT 21+06.4473	4289908.8556	5279533.7818
Radius:	1909.8600	
Delta:	10°55'38.60" Left	
Degree of Curvature(Arc):	3°00'00.00"	
Length:	364.2464	
Tangent:	182.6772	
Chord:	363.6946	
Middle Ordinate:	8.6770	
External:	8.7166	
Tangent Direction:	S 78°23'42.06" E	
Radial Direction:	S 11°36'17.94" W	
Chord Direction:	S 83°51'31.36" E	
Radial Direction:	S 0°40'39.34" W	
Tangent Direction:	S 89°19'20.66" E	
Element: Linear		
PT 21+06.4473	4289908.8556	5279533.7818
PC 21+24.1085	4289908.6468	5279551.4417
Tangent Direction:	S 89°19'20.66" E	
Tangent Length:	17.6612	
Element: Circular		
PC 21+24.1085	4289908.6468	5279551.4417
PI 22+42.6708	4289907.2447	5279669.9958
CC	4288498.3142	5279534.7620
PCC 23+60.6770	4289886.0705	5279786.6520
Radius:	1410.4312	
Delta:	9°36'36.34" Right	
Degree of Curvature(Arc):	4°03'44.24"	
Length:	236.5685	
Tangent:	118.5623	
Chord:	236.2913	
Middle Ordinate:	4.9570	
External:	4.9745	
Tangent Direction:	S 89°19'20.66" E	
Radial Direction:	S 0°40'39.34" W	
Chord Direction:	S 84°31'02.49" E	
Radial Direction:	S 10°17'15.68" W	
Tangent Direction:	S 79°42'44.32" E	

KY 8 RAMP K (CONTINUED)

STATION	NORTHING	EASTING
Element: Circular		
PCC 23+60.6770	4289886.0705	5279786.6520
PI 26+94.6579	4289826.4246	5280115.2638
CC	4287696.4549	5279389.2175
PT 30+23.6907	4289672.9446	5280411.8901
Radius:	2225.3923	
Delta:	17°04'12.72" Right	
Degree of Curvature(Arc):	2°34'28.69"	
Length:	663.0138	
Tangent:	333.9810	
Chord:	660.5644	
Middle Ordinate:	24.6459	
External:	24.9219	
Tangent Direction:	S 79°42'44.32" E	
Radial Direction:	S 10°17'15.68" W	
Chord Direction:	S 71°10'37.96" E	
Radial Direction:	S 27°21'28.40" W	
Tangent Direction:	S 62°38'31.60" E	

KY 8 RAMP L

STATION	NORTHING	EASTING
Element: Linear		
POB 10+77.9533	4289445.3833	5280991.2366
PC 13+25.8551	4289615.2726	5280810.7014
Tangent Direction:	N 46°44'24.37" W	
Tangent Length:	247.9019	
Element: Circular		
PC 13+25.8551	4289615.2726	5280810.7014
PI 18+35.3741	4289964.4505	5280439.6429
CC	4285442.6910	5276884.1700
PT 23+42.2196	4290242.6719	5280012.7911
Radius:	5729.5800	
Delta:	10°09'49.11" Left	
Degree of Curvature(Arc):	1°00'00.00"	
Length:	1016.3645	
Tangent:	509.5190	
Chord:	1015.0324	
Middle Ordinate:	22.5217	
External:	22.6106	
Tangent Direction:	N 46°44'24.37" W	
Radial Direction:	N 43°15'35.63" E	
Chord Direction:	N 51°49'18.93" W	
Radial Direction:	N 33°05'46.52" E	
Tangent Direction:	N 56°54'13.48" W	
Element: Linear		
PT 23+42.2196	4290242.6719	5280012.7911
PC 25+32.7899	4290346.7323	5279853.1400
Tangent Direction:	N 56°54'13.48" W	
Tangent Length:	190.5703	
Element: Circular		
PC 25+32.7899	4290346.7323	5279853.1400
PI 27+42.9217	4290461.4741	5279677.1012
CC	4295146.7132	5282981.7611
PT 29+52.8652	4290588.8028	5279509.9402
Radius:	5729.5800	
Delta:	4°12'02.71" Right	
Degree of Curvature(Arc):	1°00'00.00"	
Length:	420.0753	
Tangent:	210.1318	
Chord:	419.9812	
Middle Ordinate:	3.8494	
External:	3.8520	
Tangent Direction:	N 56°54'13.48" W	
Radial Direction:	N 33°05'46.52" E	
Chord Direction:	N 54°48'12.13" W	
Radial Direction:	N 37°17'49.22" E	
Tangent Direction:	N 52°42'10.78" W	
Element: Linear		
PT 29+52.8652	4290588.8028	5279509.9402
POE 36+62.6649	4291018.9037	5278945.2909
Tangent Direction:	N 52°42'10.78" W	
Tangent Length:	709.7997	

I-275 WB

STATION	NORTHING	EASTING
Element: Clothoid		
TS 1190+41.0100	4268576.4019	5284784.7197
SPI 1194+41.4678	4268976.5795	5284799.6997
SC 1196+41.0100	4269173.5728	5284836.5822
Entrance Radius:	0.0000	
Exit Radius:	2031.5800	
Length:	600.0000	
Angle:	8°27'38.78" Right	
Constant:	1104.0598	
Long Tangent:	400.4578	
Short Tangent:	200.4163	
Long Chord:	599.4187	
Xs:	598.6930	
Ys:	29.4877	
P:	7.3777	
K:	299.7821	
Tangent Direction:	N 2°08'37.59" E	
Radial Direction:	S 87°51'22.41" E	
Chord Direction:	N 4°57'48.64" E	
Radial Direction:	S 79°23'43.63" E	
Tangent Direction:	N 10°36'16.37" E	

I-275 WB (CONTINUED)

STATION	NORTHING	EASTING
Element: Circular		
SC 1196+41.0100	4269173.5728	5284836.5822
PI 1200+77.0585	4269602.1739	5284916.8279
CC	4268799.7025	5286833.4643
CS 1205+00.0733	4269960.0942	5285165.8887
Radius:	2031.5800	
Design Speed(mph):	70.0000	
Superelevation:	8.0000%	
Delta:	24°13'40.06" Right	
Degree of Curvature(Arc):	2°49'12.93"	
Length:	859.0633	
Tangent:	436.0485	
Chord:	852.6774	
Middle Ordinate:	45.2385	
External:	46.2688	
Tangent Direction:	N 10°36'16.37" E	
Radial Direction:	S 79°23'43.63" E	
Chord Direction:	N 22°43'06.40" E	
Radial Direction:	S 55°10'03.57" E	
Tangent Direction:	N 34°49'56.43" E	
Element: Clothoid		
CS 1205+00.0733	4269960.0942	5285165.8887
SPI 1207+00.4896	4270124.6013	5285280.3619
ST 1211+00.0733	4270416.0766	5285554.9682
Entrance Radius:	2031.5800	
Exit Radius:	0.0000	
Length:	600.0000	
Angle:	8°27'38.78" Right	
Constant:	1104.0598	
Long Tangent:	400.4578	
Short Tangent:	200.4163	
Long Chord:	599.4187	
Xs:	598.6930	
Ys:	29.4877	
P:	7.3777	
K:	299.7821	
Tangent Direction:	N 34°49'56.43" E	
Radial Direction:	S 55°10'03.57" E	
Chord Direction:	N 40°28'24.15" E	
Radial Direction:	S 46°42'24.80" E	
Tangent Direction:	N 43°17'35.20" E	
Element: Linear		
ST 1211+00.0733	4270416.0766	5285554.9682
TS 1216+78.1260	4270836.8152	5285951.3567
Tangent Direction:	N 43°17'35.20" E	
Tangent Length:	578.0526	
Element: Clothoid		
TS 1216+78.1260	4270836.8152	5285951.3567
SPI 1219+44.8609	4271030.9596	5286134.2651
SC 1220+78.1260	4271121.4346	5286232.2882
Entrance Radius:	0.0000	
Exit Radius:	2864.7890	
Length:	400.0000	
Angle:	4°00'00.00" Right	
Constant:	1070.4745	
Long Tangent:	266.7349	
Short Tangent:	133.3951	
Long Chord:	399.9134	
Xs:	399.8051	
Ys:	9.3052	
P:	2.3267	
K:	199.9675	
Tangent Direction:	N 43°17'35.20" E	
Radial Direction:	S 46°42'24.80" E	
Chord Direction:	N 44°37'35.00" E	
Radial Direction:	S 42°42'24.80" E	
Tangent Direction:	N 47°17'35.20" E	
Element: Circular		
SC 1220+78.1260	4271121.4346	5286232.2882
PI 1230+66.3544	4271791.6985	5286958.4711
CC	4269016.2929	5288175.3257
CS 1239+81.3481	4271871.6831	5287943.4574
Radius:	2864.7890	
Delta:	38°03'52.00" Right	
Degree of Curvature(Arc):	2°00'00.00"	
Length:	1903.2222	
Tangent:	988.2284	
Chord:	1868.4145	
Middle Ordinate:	156.6027	
External:	165.6584	
Tangent Direction:	N 47°17'35.20" E	
Radial Direction:	S 42°42'24.80" E	
Chord Direction:	N 66°19'31.20" E	
Radial Direction:	S 4°38'32.80" E	
Tangent Direction:	N 85°21'27.20" E	
Element: Clothoid		
CS 1239+81.3481	4271871.6831	5287943.4574
SPI 1241+14.7433	4271882.4797	5288076.4148
ST 1243+81.3481	4271885.4705	5288343.1330
Entrance Radius:	2864.7890	
Exit Radius:	0.0000	
Length:	400.0000	
Angle:	4°00'00.00" Right	
Constant:	1070.4745	
Long Tangent:	266.7349	
Short Tangent:	133.3951	
Long Chord:	399.9134	
Xs:	399.8051	
Ys:	9.3052	
P:	2.3267	
K:	199.9675	
Tangent Direction:	N 85°21'27.20" E	
Radial Direction:	S 4°38'32.80" E	
Chord Direction:	N 88°01'27.40" E	
Radial Direction:	S 0°38'32.80" E	
Tangent Direction:	N 89°21'27.20" E	
Element: Linear		
ST 1243+81.3481	4271885.4705	5288343.1330
PC 1249+93.2702	4271892.3317	5288955.0166
Tangent Direction:	N 89°21'27.20" E	
Tangent Length:	611.9221	

I-275 WB (CONTINUED)

STATION	NORTHING	EASTING
Element: Circular		
PC 1249+93.2702	4271892.3317	5288955.0166
PI 1260+00.2875	4271903.6229	5288961.9706
CC	4275697.8801	5288912.3441
PT 1269+62.1822	4272411.4516	5290831.5646
Radius:	3805.7877	
Delta:	29°38'30.43" Left	
Degree of Curvature(Arc):	1°30'19.77"	
Length:	1968.9120	
Tangent:	1007.0173	
Chord:	1947.0280	
Middle Ordinate:	126.6179	
External:	130.9754	
Tangent Direction:	N 89°21'27.20" E	
Radial Direction:	S 0°38'32.80" E	
Chord Direction:	N 74°32'11.98" E	
Radial Direction:	S 30°17'03.23" E	
Tangent Direction:	N 59°42'56.77" E	

THREE MILE ROAD

STATION	NORTHING	EASTING
Element: Linear		
POB 45+38.9672	4270651.9864	5285146.2386
POE 54+47.3050	4269980.2399	5285757.6585
Tangent Direction:	S 42°18'29.82" E	
Tangent Length:	908.3378	

Preliminary Plans

ALIGNMENT & COORDINATE INFORMATION

MicroStation v8.11.7.443 | E-SHEET NAME: | USER: tvonbehren DATE PLOTTED: January 2, 2012 | FILE NAME: P:\CIVIL\147N6-2021.00\CONTRACT PLANS AND PROPOSAL\CONTRACT PLAN SET\ROADWAY\R316OCC.DGN

COUNTY OF	ITEM NO.	SHEET NO.
CAMPBELL	6-2021.00	R317

	Design pH Level	Max Cover Height Ft	DBI Type 1 Each	DBI Type 5A Each	Pipe Culvert 15" Lin Ft	Pipe Culvert 18" Lin Ft	Cap Drop Box Inlet Each	Geotextile Fabric Type IV For Pipe SY	Concrete Class A CY	Steel Reinf. LB	Channel Lining Class II TON
6+33.5 I-275 RAMP A 0° SKEW	MED	2		1		70		121	0.93	8	27
71+31 I-471 SB 0° SKEW	MED	2	1		38			62			

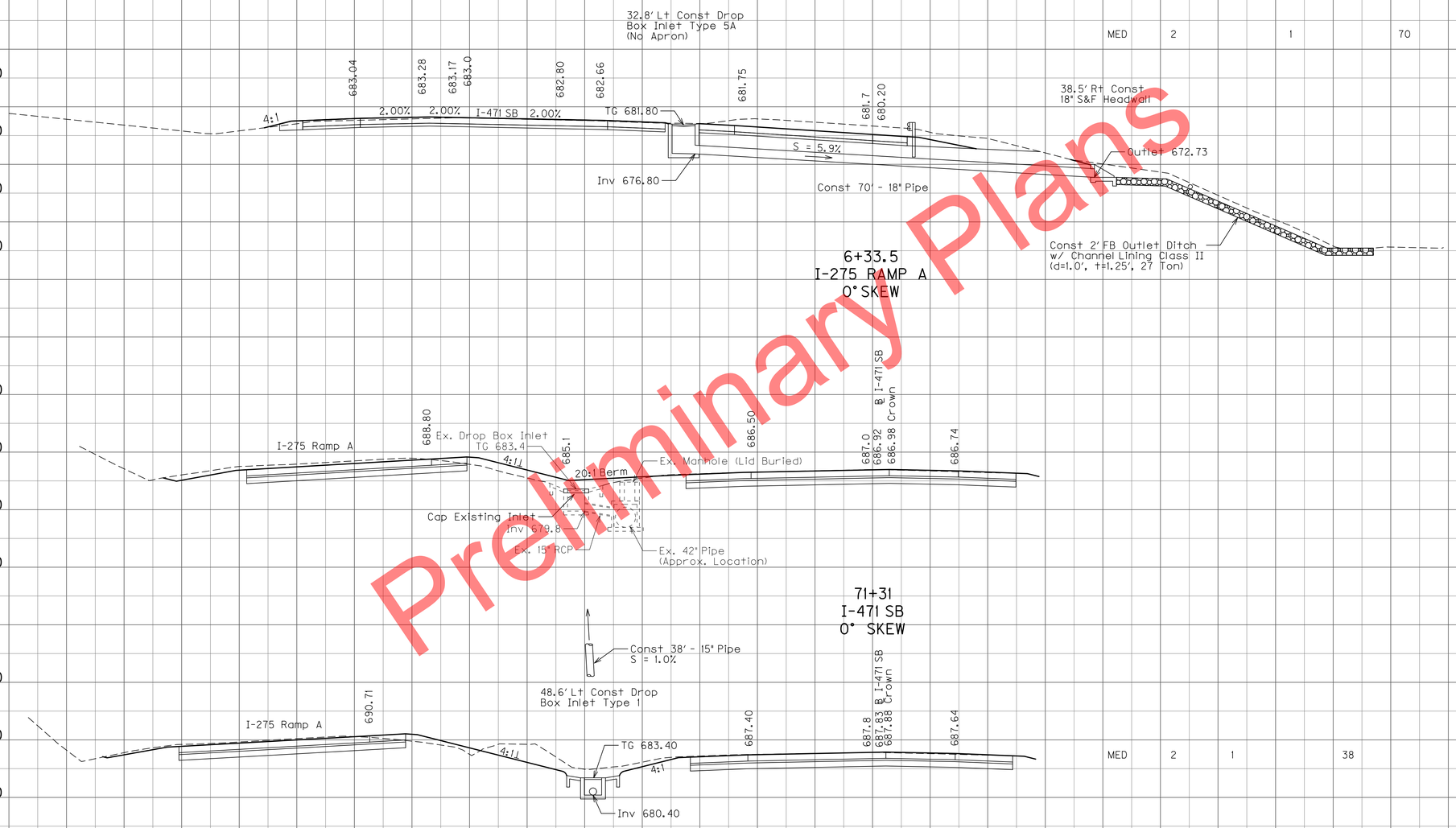

Preliminary Plans

NOTE: JPC Pavment Alternate Shown, Use Contract Bid Alternate.

SCALE: 1" = 10 HORIZONTAL
1" = 10 VERTICAL

CULVERT SECTIONS
STA 70+90 - STA 71+31 I-471 SB
STA 6+33.5 I-275 RAMP A

FILE NAME: P:\CIVIL\471N\6-2021.00\CONTRACT PLANS AND PROPOSAL\CONTRACT PLAN SET\ROADWAY\R317OOPD.DGN
USER: tvonbehren
DATE PLOTTED: January 2, 2012
E-SHEET NAME:
MicroStation v8.11.7.443

COUNTY OF	ITEM NO.	SHEET NO.
CAMPBELL	6-2021.00	R318

	Design pH Level	Max Cover Height Ft	Pipe Culvert 15" Lin Ft	Pipe Culvert 24" Lin Ft	CBI Type A Each	DBI Type 1 Each	Cap Drop Box Inlet Each	Concrete Class A CY	Steel Reinf. LB	Channel Lining Class II TON	Geotextile Fabric Type IV For Pipe SY
	MED	2	78		1			0.75	7	3	43
						1					

54.7' Lt Const Curb
Box Inlet Type A (4,2,h=4')

88' Lt Sta 11+34
Const 15" S&F Headwall

OE 680.2

Outlet 679.0

Ex 8" PVC

S = 2.5%

Const 78' - 15" Pipe

Const Channel Lining Class II (3 Ton)

FL 684.8

685.0

Ex Inlet
TG 685.0

Island

685.0

685.6

Inv 680.9

Inv 683.5

Δ = 2° Rt

10+36
US 27 RAMP B
46° 43' SKEW RT

666.30

667.2

666.78

667.02

666.78

2.00%

I-471 SB

2.00%

2.00%

Ex. Drop Box Inlet

TG 663.2

I-471 NB

Cap Existing Inlet

Inv 659.3

Ex. 24" RCP

Outlet Pipe Into Existing
Drop Box Inlet

80+32.3
I-471 SB
0° SKEW

MED 2 30 1 58

Const 30' - 24" Pipe
S = 2%

44.8' Rt Const Drop Box
Inlet Type 5D (Sag)

667.03

667.2

667.51

667.75

667.51

2.00%

I-471 SB

2.00%

2.00%

TG 664.33

3:1

I-471 NB

Inv 660.33

80+00
I-471 SB
0° SKEW

690 680 670 660 650

-150 -140 -130 -120 -110 -100 -90 -80 -70 -60 -50 -40 -30 -20 -10 0 10 20 30 40 50 60 70 80 90 100 110 120 130 140 150

NOTE: JPC Pavment Alternate Shown, Use Contract Bid Alternate.

SCALE: 1" = 10' HORIZONTAL
1" = 10' VERTICAL

CULVERT SECTIONS
STA 10+36 US 27 RAMP B
STA 80+00 - STA 80+32.3 I-471 SB

Preliminary Plans

FILE NAME: P:\CIVIL\147\N6-2021.00\CONTRACT PLANS AND PROPOSAL\CONTRACT PLAN SET\ROADWAY\R318OOPD.DGN
USER: tvonbehren
DATE PLOTTED: January 2, 2012
E-SHEET NAME:
MicroStation v8.11.7.443

COUNTY OF	ITEM NO.	SHEET NO.
CAMPBELL	6-2021.00	R319

	Design pH Level	Max Cover Height Ft	CMBBI Type 9BI Each	Reconst. Manhole Each	Pipe Culvert 15" Lin Ft	Geotextile Fabric Type IV For Pipe SY
94+46.5 I-471 0° SKEW	MED	4	1		4	7
89+74.3 I-471 0° SKEW	MED			1		
89+64.3 I-471 0° SKEW	MED	4	1		9	15

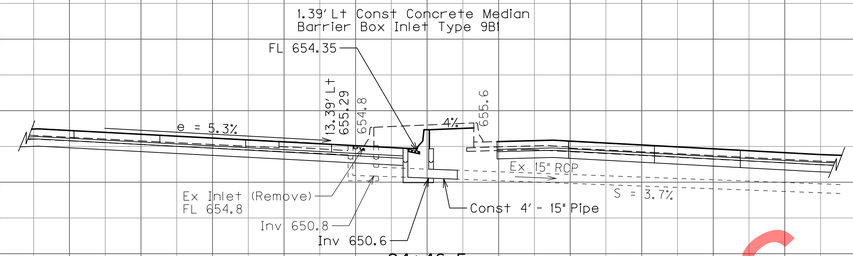

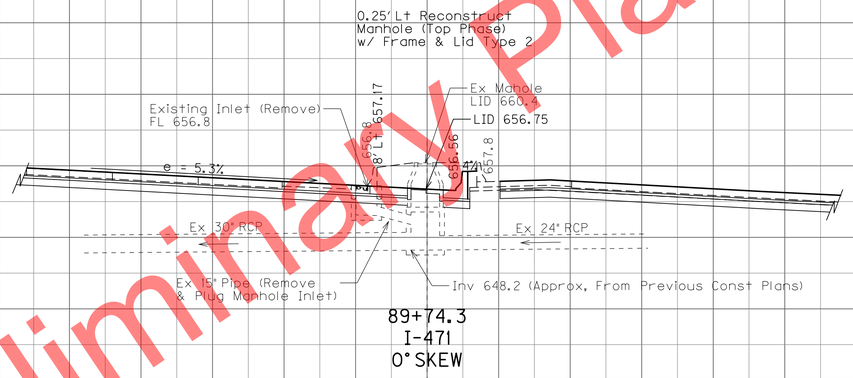

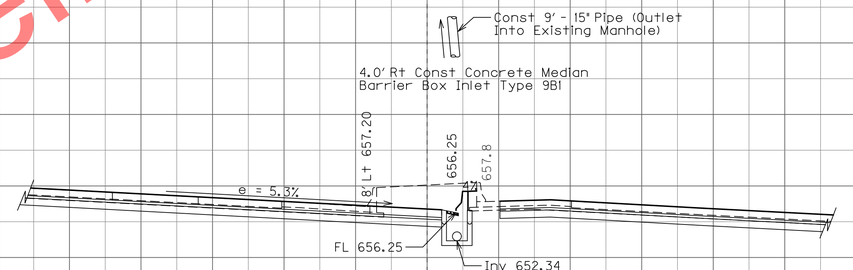

Preliminary Plans

NOTE: JPC Pavment Alternate Shown, Use Contract Bid Alternate.

SCALE: 1" = 10 HORIZONTAL
1" = 10 VERTICAL

CULVERT SECTIONS
STA 89+64.3
STA 89+74.3 - STA 94+46.5 I-471

FILE NAME: P:\CIVIL\147IN6-2021.00\CONTRACT PLANS AND PROPOSAL\CONTRACT PLAN SET\ROADWAY\R319OOPD.DGN
USER: tvanbehren
DATE PLOTTED: January 2, 2012
E-SHEET NAME:
MicroStation v8.11.7.443

COUNTY OF	ITEM NO.	SHEET NO.
CAMPBELL	6-2021.00	X1

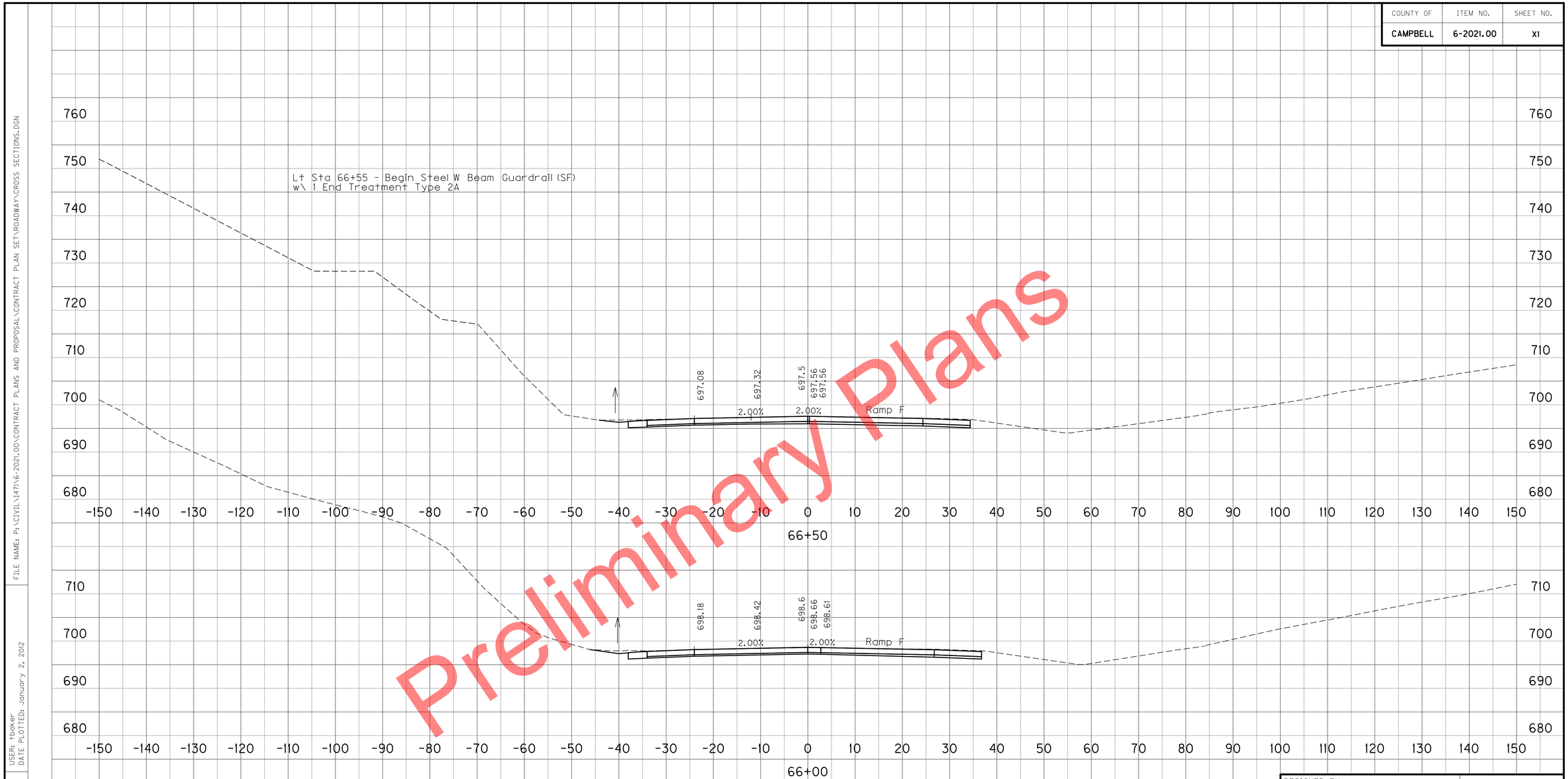

Preliminary Plans

DESIGNED BY:

DATE SUBMITTED:

Commonwealth of Kentucky
DEPARTMENT OF HIGHWAYS
COUNTY OF

CAMPBELL

PROJECT NUMBERS: FD52 019 0471 000-005
IMNH 4714(034)

SCALE: 1" = 10' HORIZONTAL
1" = 10' VERTICAL

I-471 SB
STA. 66+00 TO STA. 66+50

FILE NAME: P:\CIVIL\471N\6-2021.00\CONTRACT PLANS AND PROPOSAL\CONTRACT PLAN SET\ROADWAY\CROSS SECTIONS.DGN
USER: tbaker
DATE PLOTTED: January 2, 2012
E-SHEET NAME:
MicroStation v8.11.7.443

COUNTY OF	ITEM NO.	SHEET NO.
CAMPBELL	6-2021.00	X2

Preliminary Plans



SCALE: 1" = 10' HORIZONTAL
1" = 10' VERTICAL

I-471 SB
STA. 67+00 TO STA. 67+00

MicroStation v8.11.7.443
E-SHEET NAME:
USER: tboker
DATE PLOTTED: January 2, 2012
FILE NAME: P:\CIVIL\471\6-2021.00\CONTRACT PLANS AND PROPOSAL\CONTRACT PLAN SET\ROADWAY\CROSS SECTIONS.DGN

COUNTY OF	ITEM NO.	SHEET NO.
CAMPBELL	6-2021.00	X3

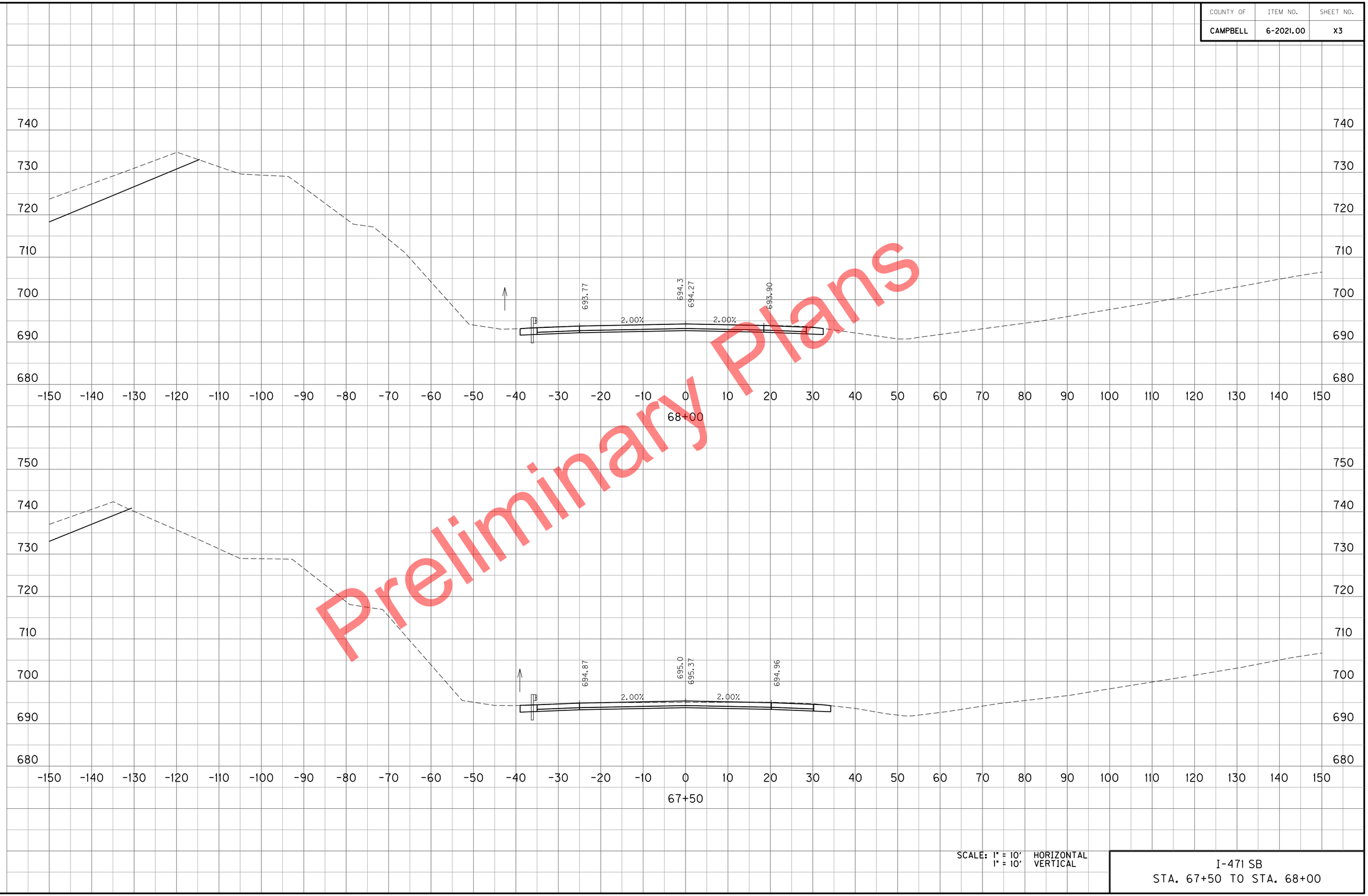

Preliminary Plans

SCALE: 1" = 10' HORIZONTAL
1" = 10' VERTICAL

I-471 SB
STA. 67+50 TO STA. 68+00

FILE NAME: P:\CIVIL\471N\6-2021.00\CONTRACT PLANS AND PROPOSAL\CONTRACT PLAN SET\ROADWAY\CROSS SECTIONS.DGN
USER: tvonbehren
DATE PLOTTED: January 2, 2012
E-SHEET NAME:
MicroStation v8.11.7.443

COUNTY OF	ITEM NO.	SHEET NO.
CAMPBELL	6-2021.00	X4

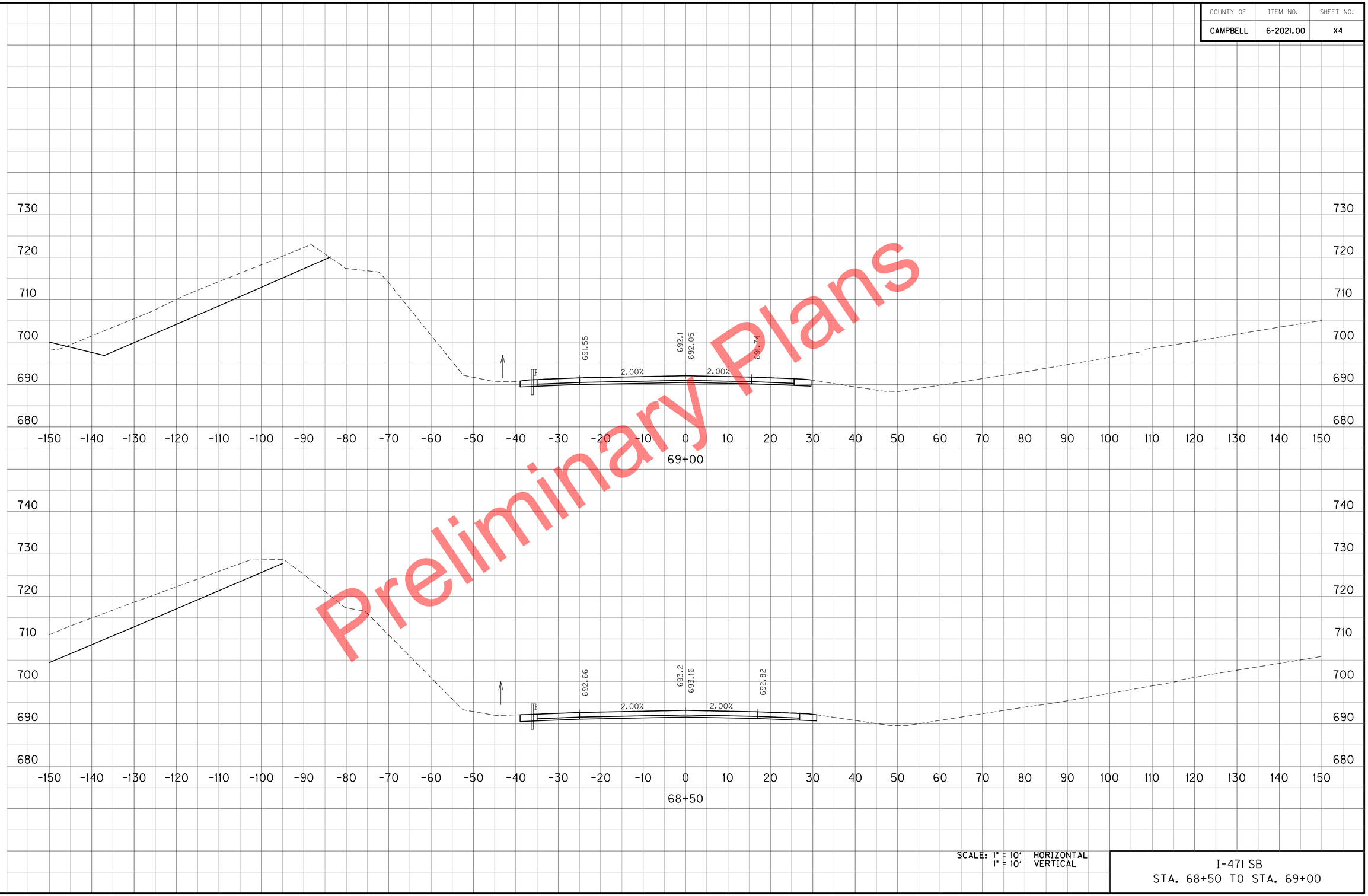

Preliminary Plans

SCALE: 1" = 10' HORIZONTAL
1" = 10' VERTICAL

I-471 SB
STA. 68+50 TO STA. 69+00

FILE NAME: P:\CIVIL\471\N6-2021.00\CONTRACT PLANS AND PROPOSAL\CONTRACT PLAN SET\ROADWAY\CROSS SECTIONS.DGN
USER: tvonbehren
DATE PLOTTED: January 2, 2012
E-SHEET NAME:
MicroStation v8.11.7.443

COUNTY OF	ITEM NO.	SHEET NO.
CAMPBELL	6-2021.00	X5

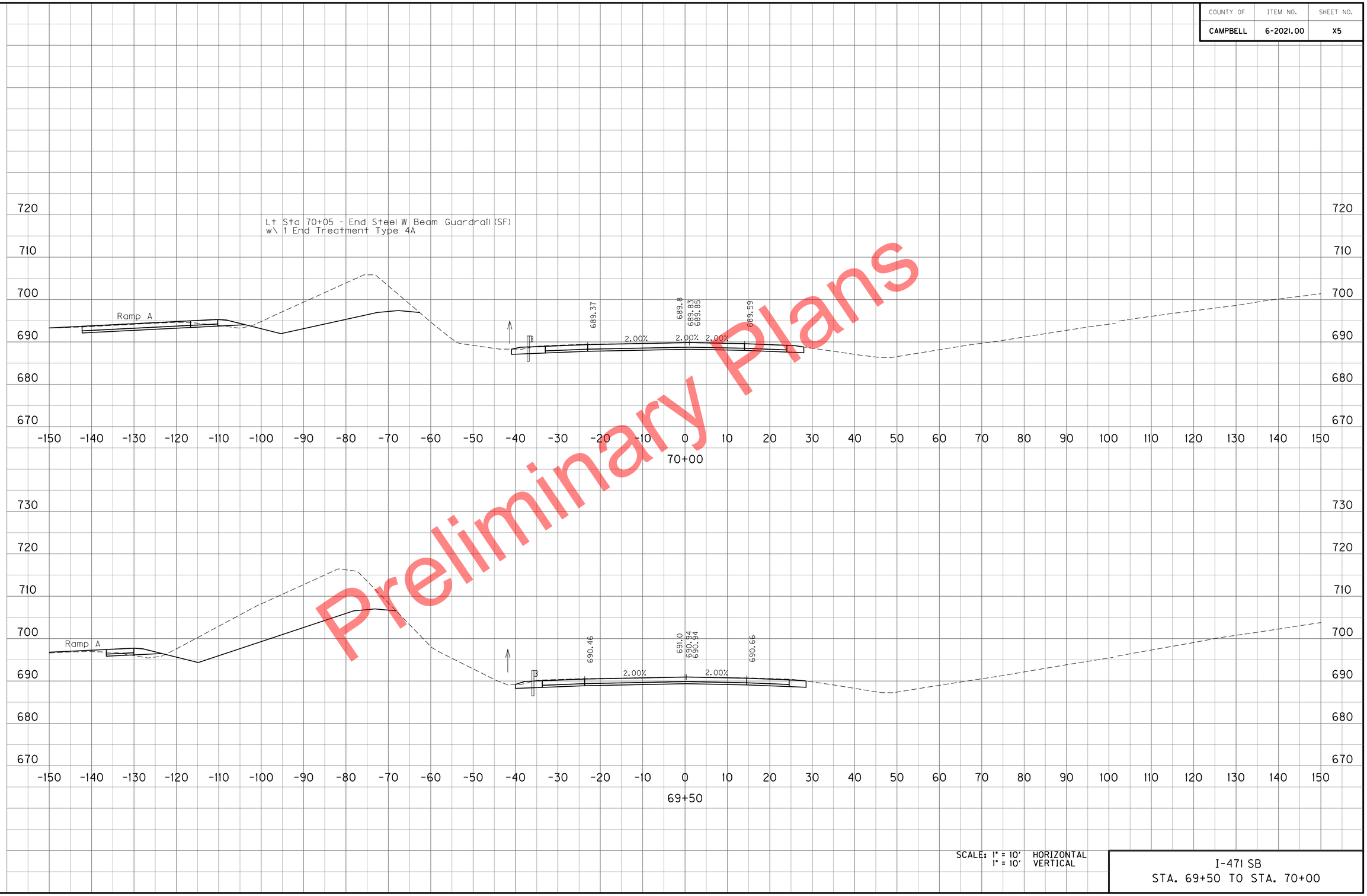

Preliminary Plans

SCALE: 1" = 10' HORIZONTAL
1" = 10' VERTICAL

I-471 SB
STA. 69+50 TO STA. 70+00

MicroStation v8.11.7.443
E-SHEET NAME:
USER: tvonbehren
DATE PLOTTED: January 2, 2012
FILE NAME: P:\CIVIL\471\6-2021.00\CONTRACT PLANS AND PROPOSAL\CONTRACT PLAN SET\ROADWAY\CROSS SECTIONS.DGN

COUNTY OF	ITEM NO.	SHEET NO.
CAMPBELL	6-2021.00	X6

EMB COM

18

Ramp A

686.04
686.08
686.50
686.56
686.32

2.00% 2.00% 2.00%

684.6

COM 10

71+50

15

Lt Sta 71+00 - Begin Spl V Ditch
(Elev 685.00)

Ramp A

687.18
687.6
687.61
687.66
687.42

2.00% 2.00% 2.00%

4:1

685.0

COM 6

71+00

+90 - 683.4

Ramp A

688.27
688.7
688.72
688.75
688.51

2.00% 2.00% 2.00%

70+50

Preliminary Plans

SCALE: 1" = 10' HORIZONTAL
1" = 10' VERTICAL

I-471 SB
STA. 70+50 TO STA. 71+50

FILE NAME: P:\CIVIL\147N6-2021.00\CONTRACT PLANS AND PROPOSAL\CONTRACT PLAN SET\ROADWAY\CROSS SECTIONS.DGN
USER: tvonbehren
DATE PLOTTED: January 2, 2012
E-SHEET NAME:
MicroStation v8.11.7.443

COUNTY OF	ITEM NO.	SHEET NO.
CAMPBELL	6-2021.00	X7

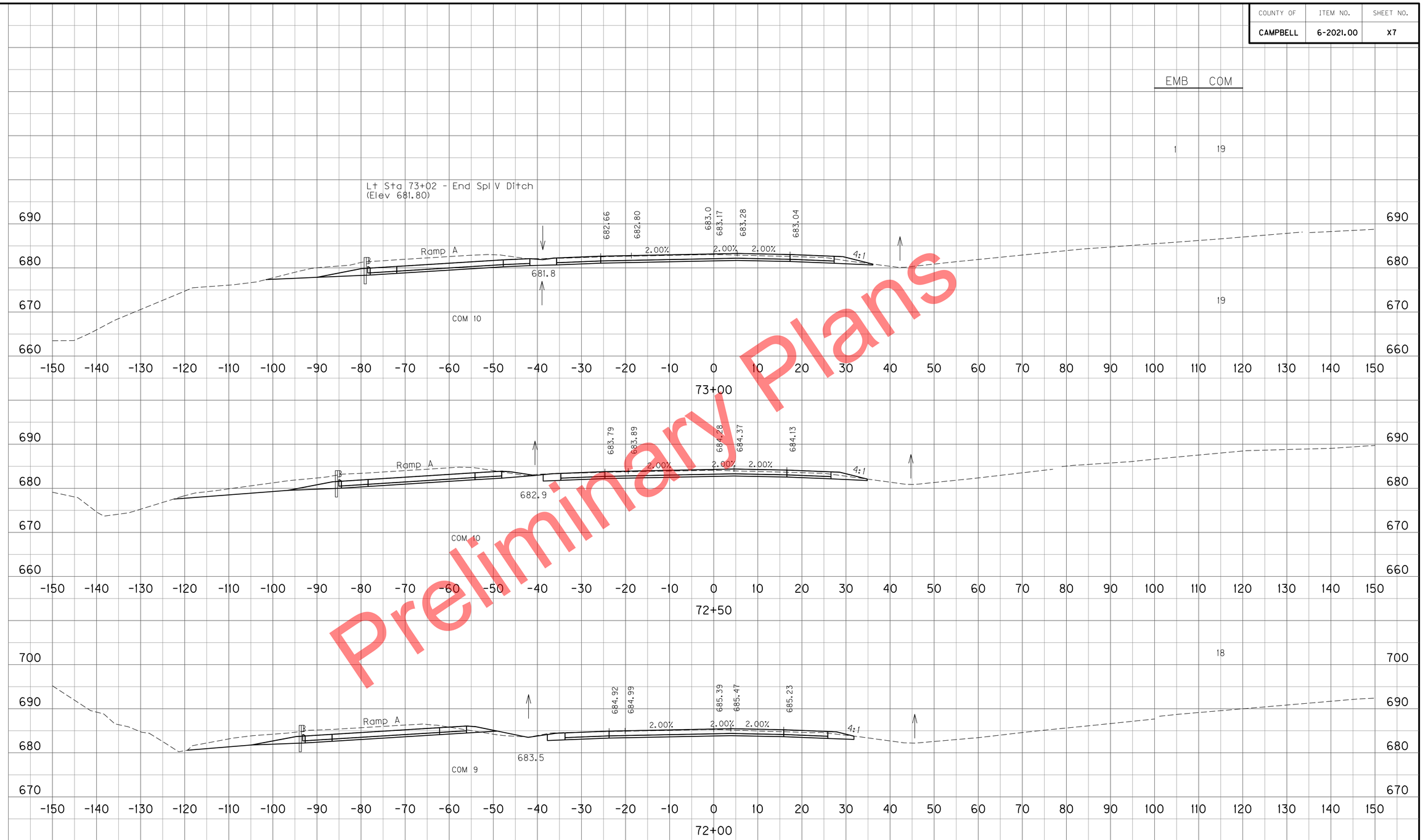

Preliminary Plans

SCALE: 1" = 10' HORIZONTAL
1" = 10' VERTICAL

I-471 SB
STA. 72+00 TO STA. 73+00

MicroStation v8.11.7.443
E-SHEET NAME:
USER: tvonbehren
DATE PLOTTED: January 2, 2012
FILE NAME: P:\CIVIL\471N6-2021.00\CONTRACT PLANS AND PROPOSAL\CONTRACT PLAN SET\ROADWAY\CROSS SECTIONS.DGN

COUNTY OF	ITEM NO.	SHEET NO.
CAMPBELL	6-2021.00	X8

Preliminary Plans

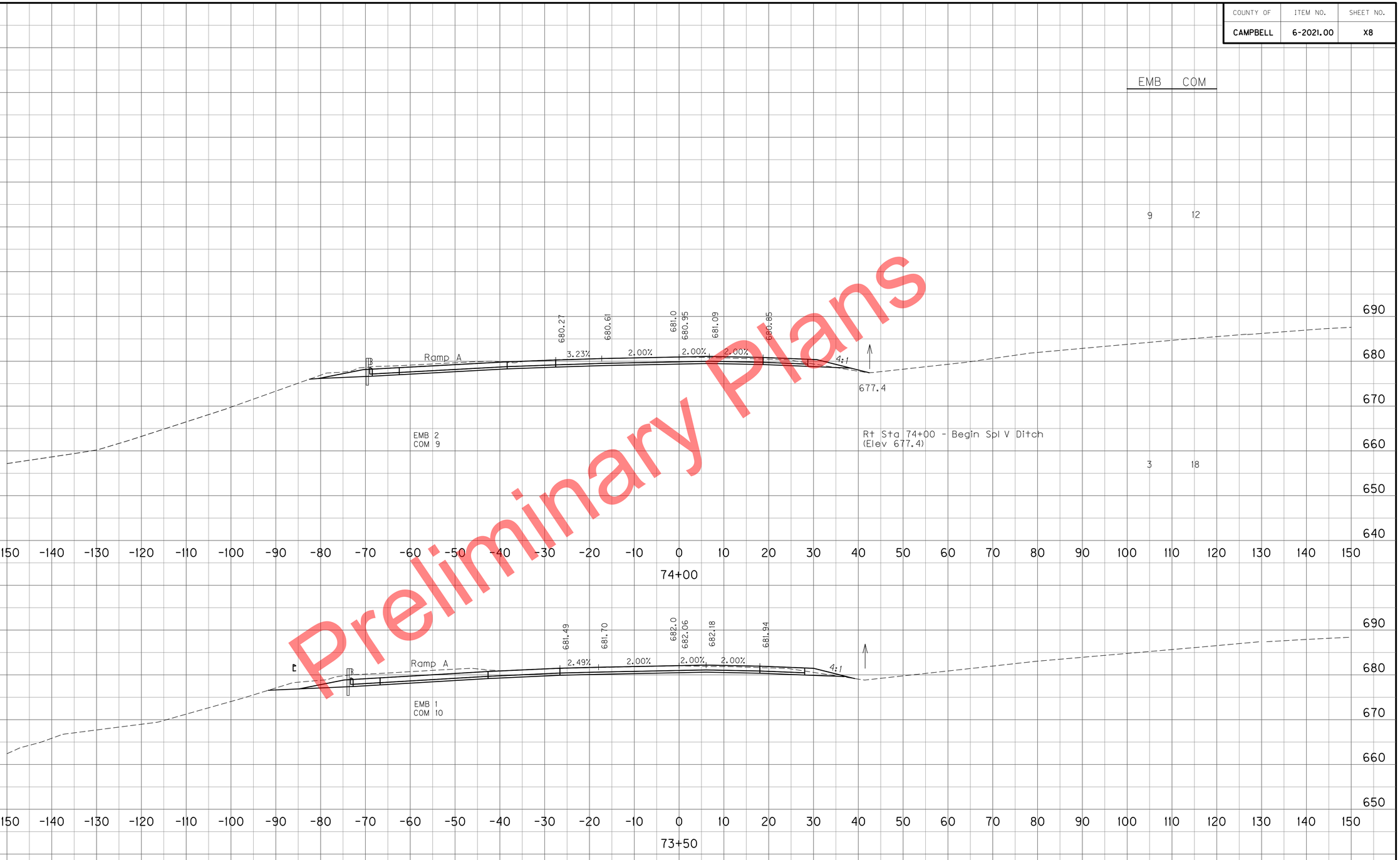

SCALE: 1" = 10' HORIZONTAL
1" = 10' VERTICAL

I-471 SB
STA. 73+50 TO STA. 74+00

FILE NAME: P:\CIVIL\147N\6-2021.00\CONTRACT PLANS AND PROPOSAL\CONTRACT PLAN SET\ROADWAY\CROSS SECTIONS.DGN
USER: tvonbehren
DATE PLOTTED: January 2, 2012
E-SHEET NAME:
MicroStation v8.11.7.443

COUNTY OF	ITEM NO.	SHEET NO.
CAMPBELL	6-2021.00	X9

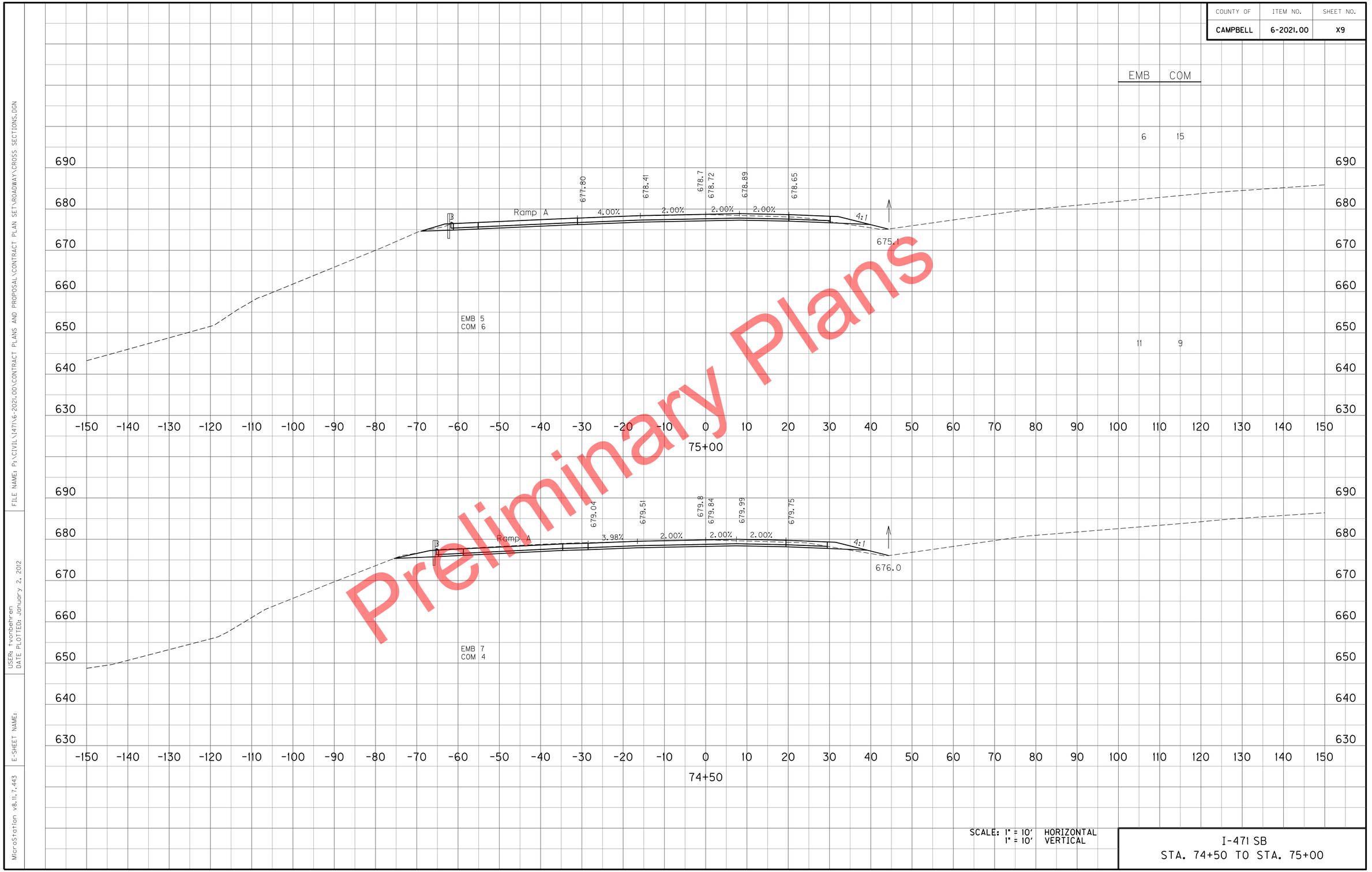

Preliminary Plans

SCALE: 1" = 10' HORIZONTAL
1" = 10' VERTICAL

I-471 SB
STA. 74+50 TO STA. 75+00

FILE NAME: P:\CIVIL\471\6-2021.00\CONTRACT PLANS AND PROPOSAL\CONTRACT PLAN SET\ROADWAY\CROSS SECTIONS.DGN
USER: tvonbehren
DATE PLOTTED: January 2, 2012
E-SHEET NAME:
MicroStation v8.11.7.443

COUNTY OF	ITEM NO.	SHEET NO.
CAMPBELL	6-2021.00	X10

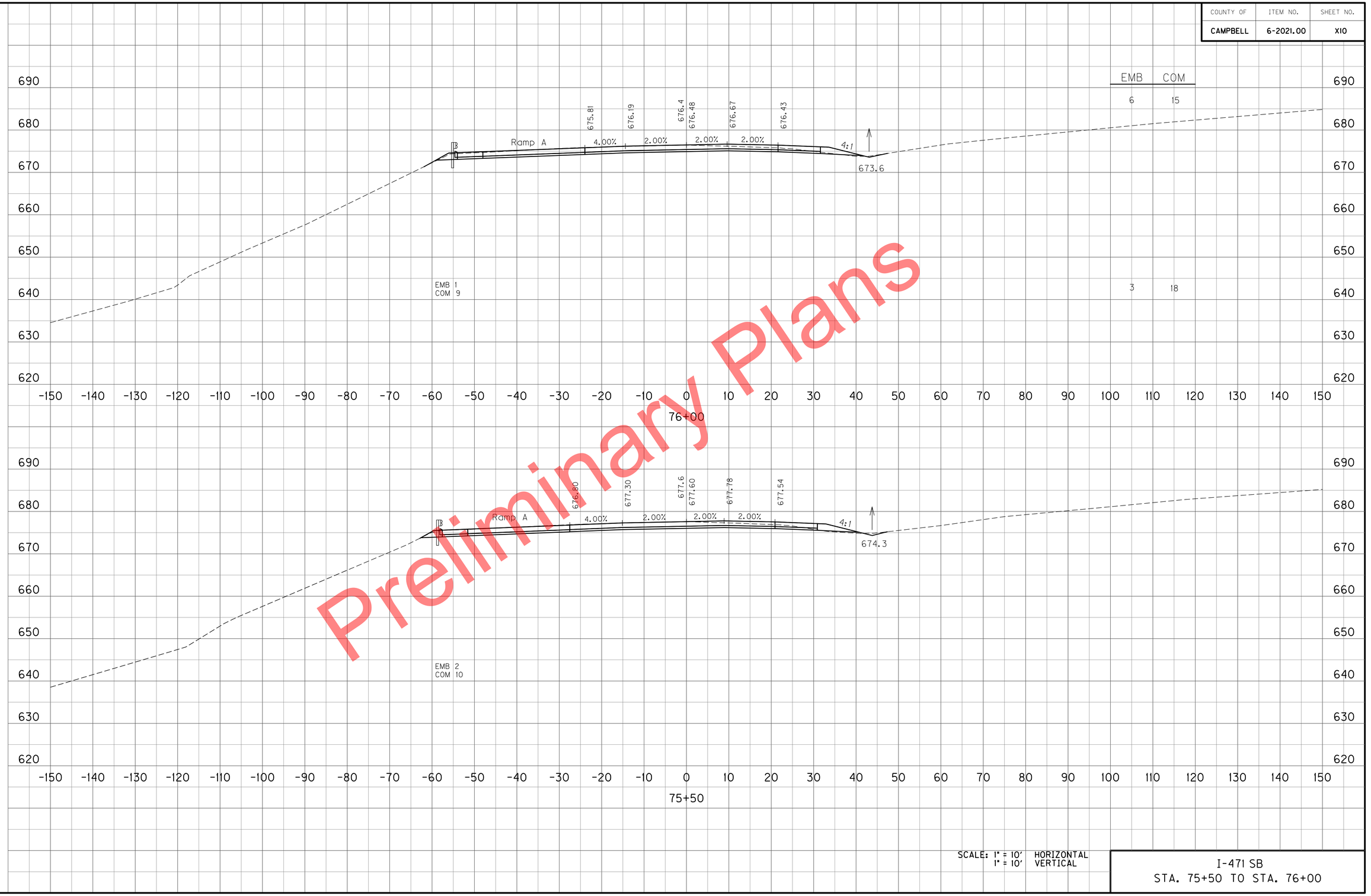

Preliminary Plans

SCALE: 1" = 10' HORIZONTAL
1" = 10' VERTICAL

I-471 SB
STA. 75+50 TO STA. 76+00

FILE NAME: P:\CIVIL\471\6-2021.00\CONTRACT PLANS AND PROPOSAL\CONTRACT PLAN SET\ROADWAY\CROSS SECTIONS.DGN
USER: tvonbehren
DATE PLOTTED: January 2, 2012
E-SHEET NAME:
MicroStation v8.11.7.443

COUNTY OF	ITEM NO.	SHEET NO.
CAMPBELL	6-2021.00	X11

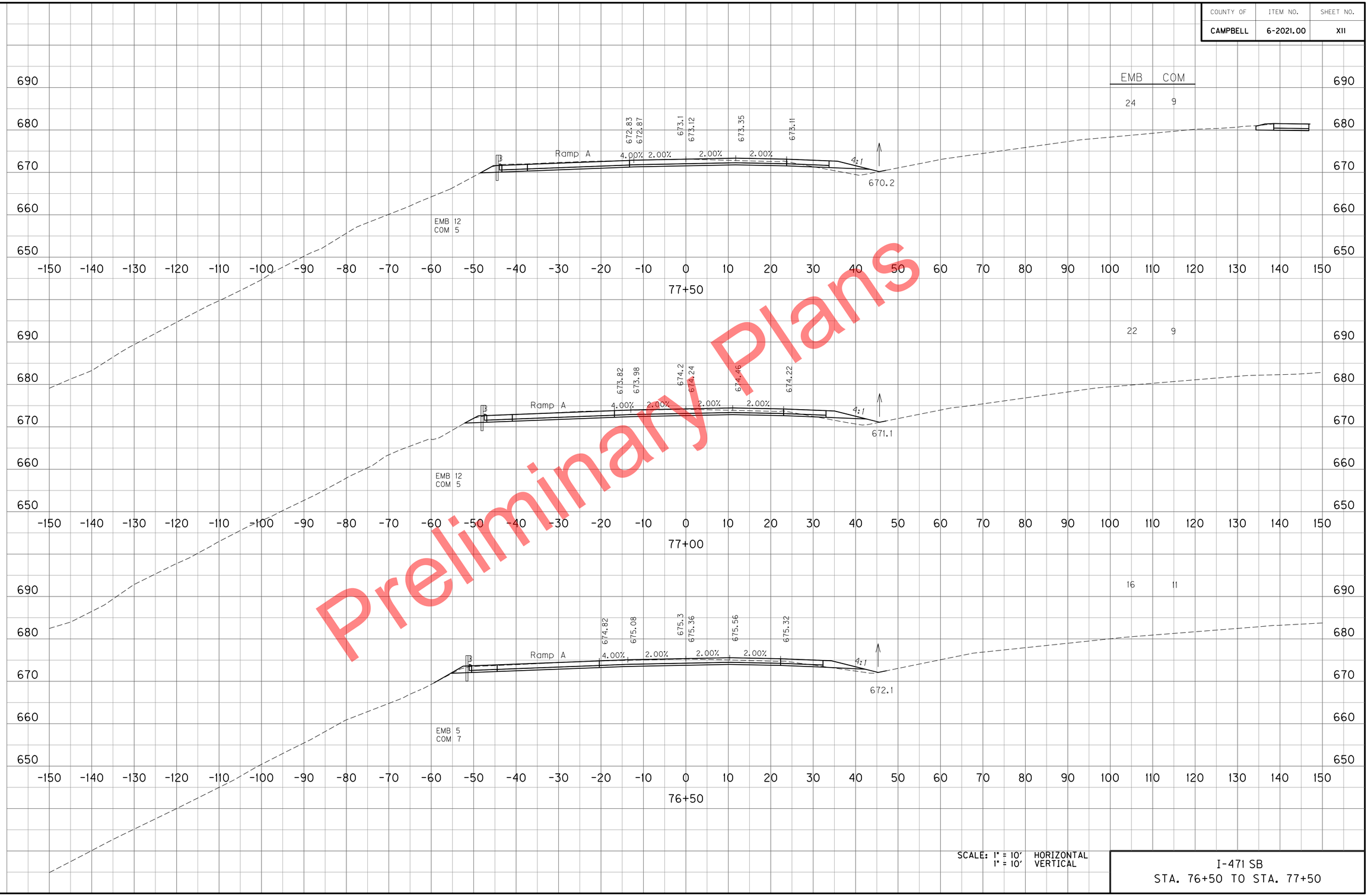

Preliminary Plans

SCALE: 1" = 10' HORIZONTAL
1" = 10' VERTICAL

I-471 SB
STA. 76+50 TO STA. 77+50

MicroStation v8.11.7.443
E-SHEET NAME:
USER: tvonbehren
DATE PLOTTED: January 2, 2012
FILE NAME: P:\CIVIL\147IN\6-2021.00\CONTRACT PLANS AND PROPOSAL\CONTRACT PLAN SET\ROADWAY\CROSS SECTIONS.DGN

COUNTY OF	ITEM NO.	SHEET NO.
CAMPBELL	6-2021.00	X12

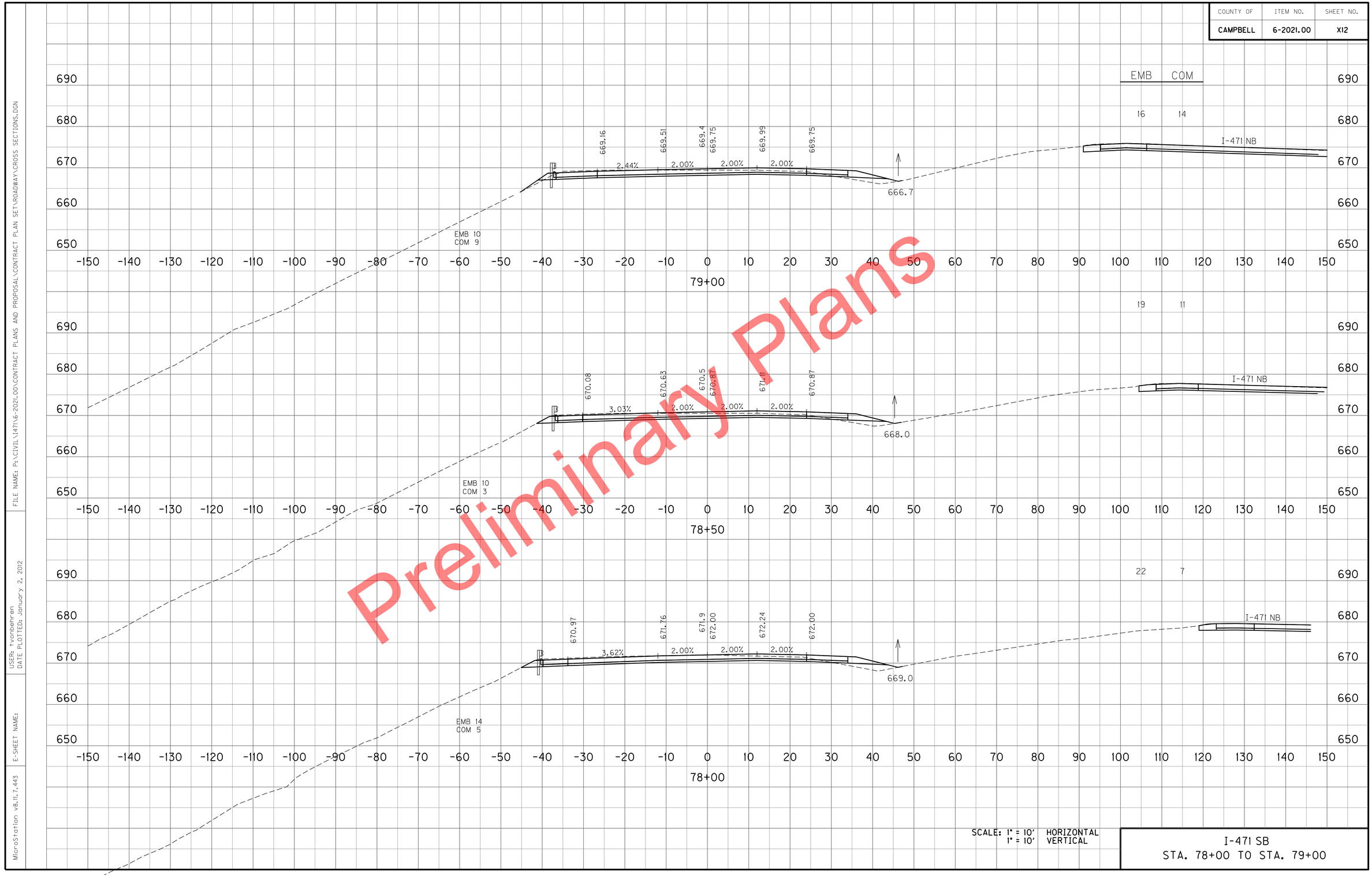

Preliminary Plans

SCALE: 1" = 10' HORIZONTAL
1" = 10' VERTICAL

I-471 SB
STA. 78+00 TO STA. 79+00

FILE NAME: P:\CIVIL\147IN6-2021.00\CONTRACT PLANS AND PROPOSAL\CONTRACT PLAN SET\ROADWAY\CROSS SECTIONS.DGN
USER: tvonbehren
DATE PLOTTED: January 2, 2012
E-SHEET NAME:
MicroStation v8.11.7.443

COUNTY OF	ITEM NO.	SHEET NO.
CAMPBELL	6-2021.00	X13

Preliminary Plans

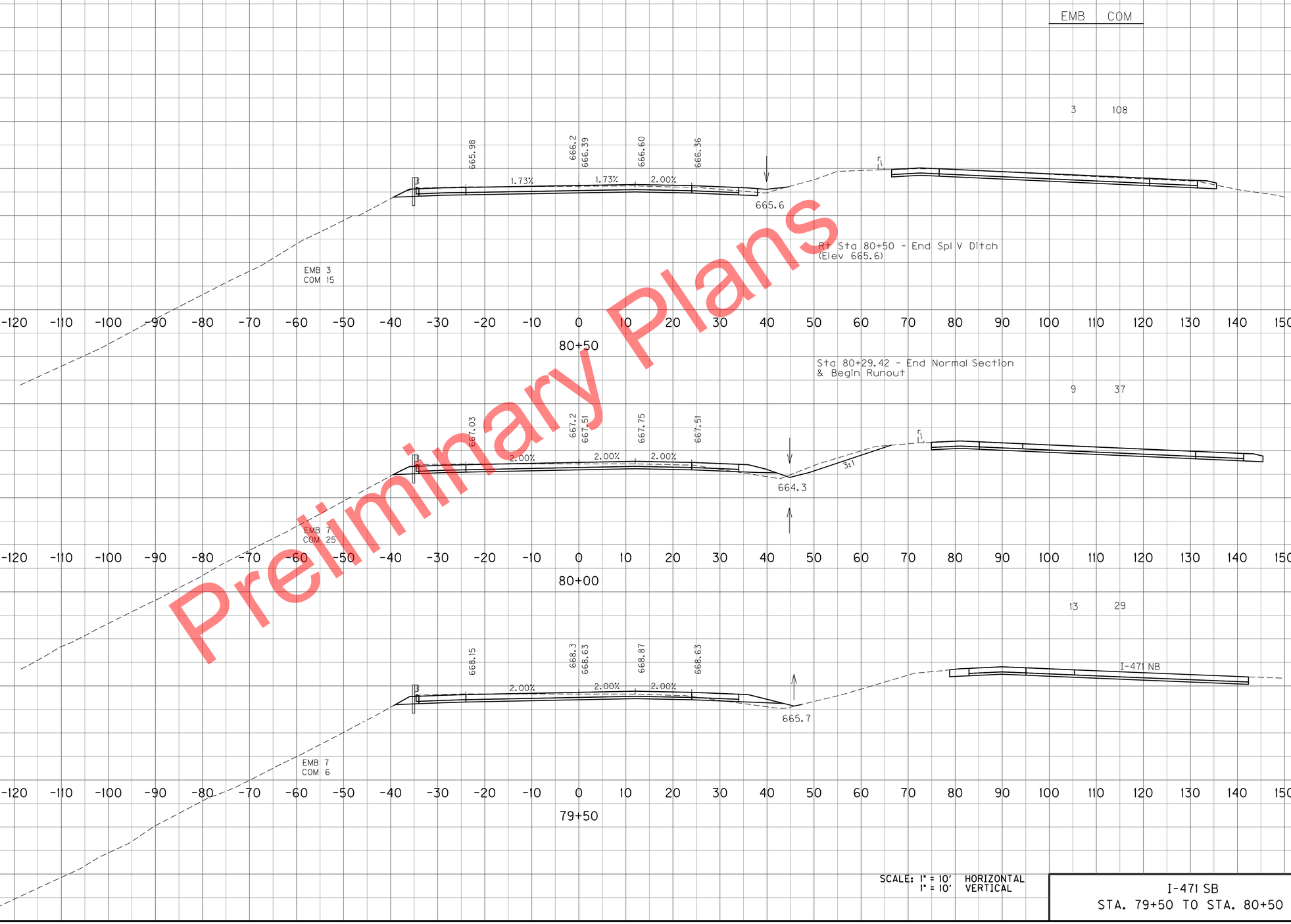

SCALE: 1" = 10' HORIZONTAL
1" = 10' VERTICAL

I-471 SB
STA. 79+50 TO STA. 80+50

FILE NAME: P:\CIVIL\471N6-2021.00\CONTRACT PLANS AND PROPOSAL\CONTRACT PLAN SET\ROADWAY\CROSS SECTIONS.DGN
USER: tvonbehren
DATE PLOTTED: January 2, 2012
E-SHEET NAME:
MicroStation v8.11.7.443

COUNTY OF	ITEM NO.	SHEET NO.
CAMPBELL	6-2021.00	X14

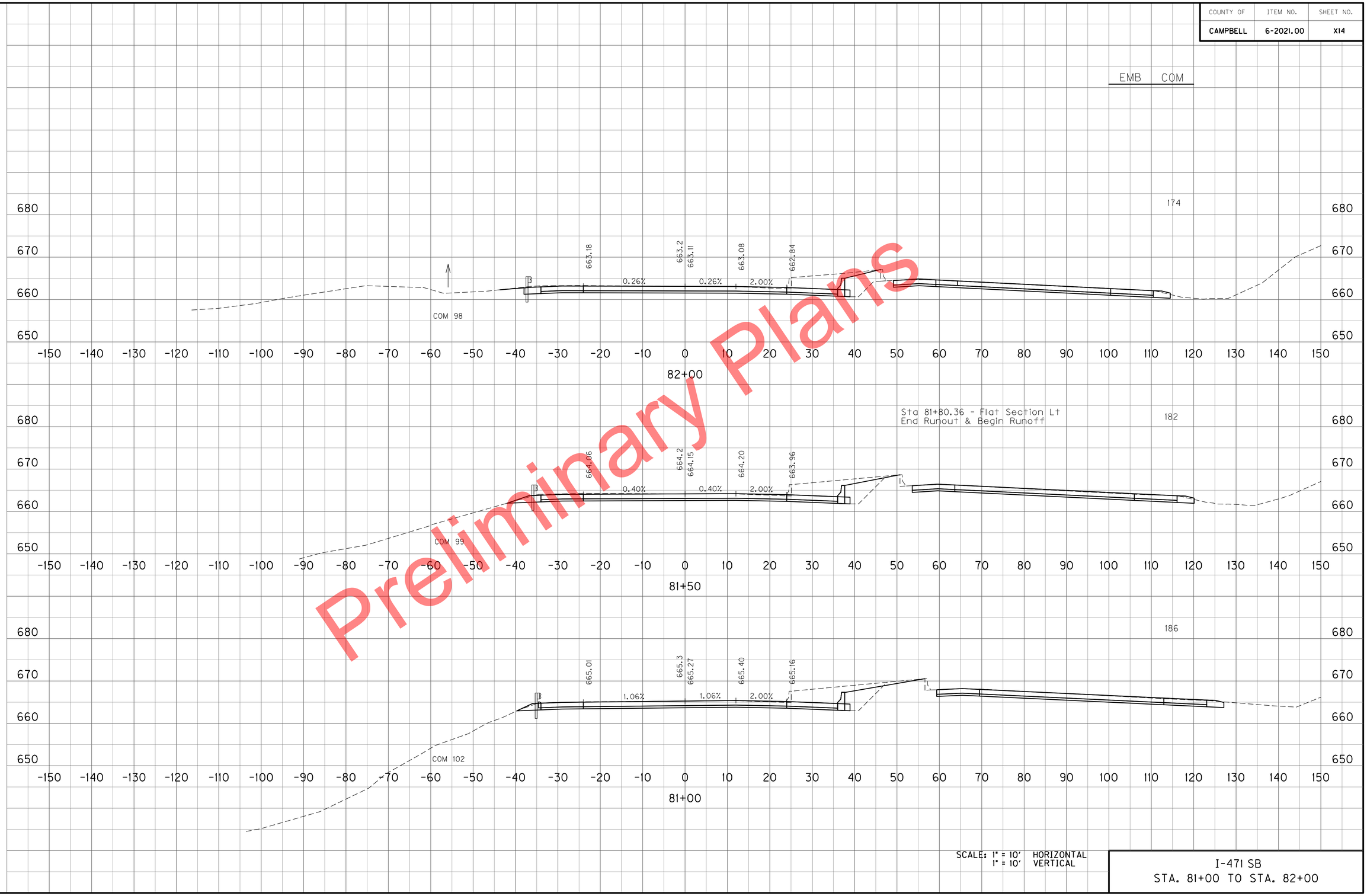

Preliminary Plans

SCALE: 1" = 10' HORIZONTAL
1" = 10' VERTICAL

I-471 SB
STA. 81+00 TO STA. 82+00

MicroStation v8.11.7.443
E-SHEET NAME:
USER: tvonbehren
DATE PLOTTED: January 2, 2012
FILE NAME: P:\CIVIL\471\6-2021.00\CONTRACT PLANS AND PROPOSAL\CONTRACT PLAN SET\ROADWAY\CROSS SECTIONS.DGN

COUNTY OF	ITEM NO.	SHEET NO.
CAMPBELL	6-2021.00	X15

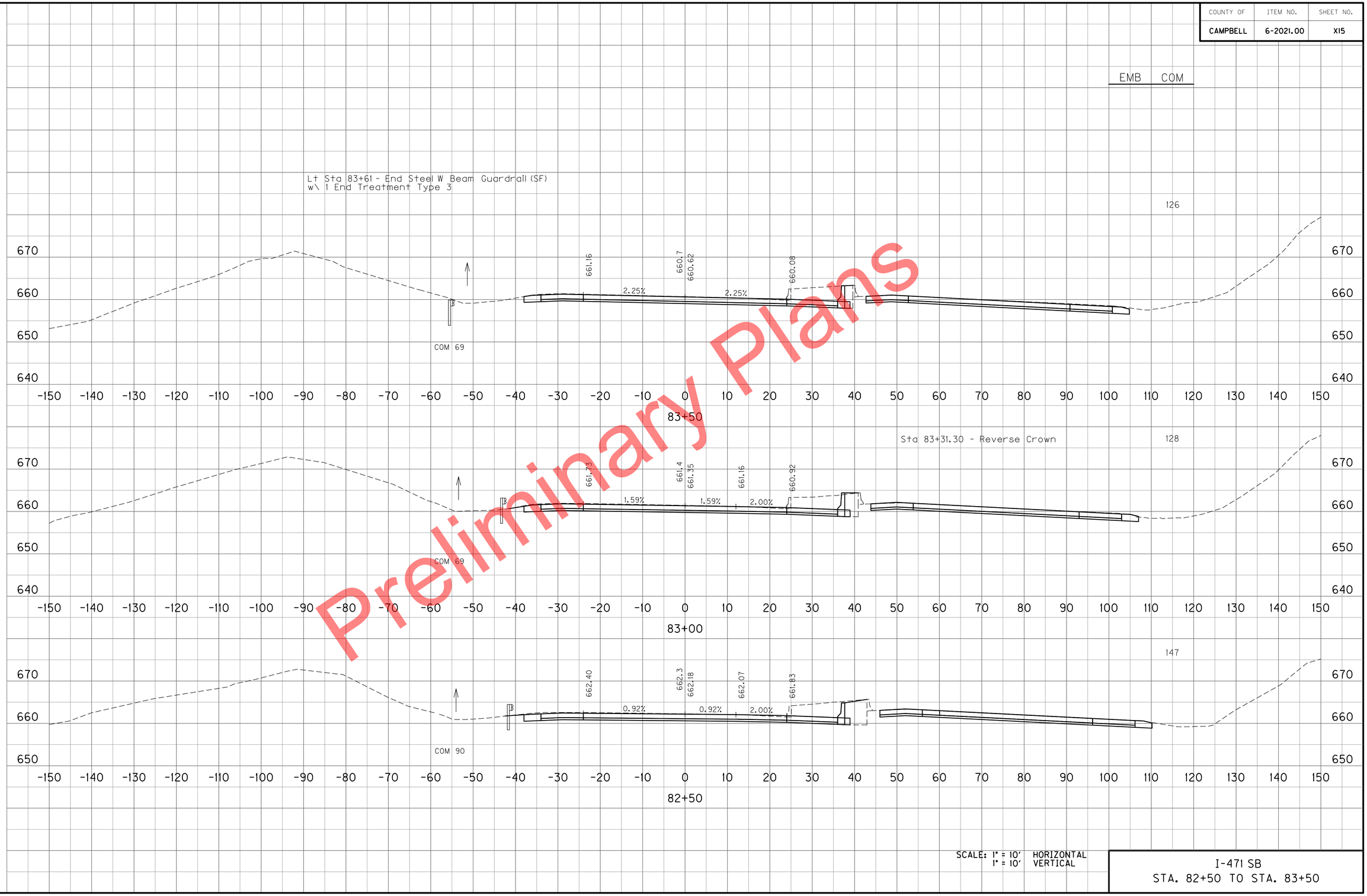

Preliminary Plans

SCALE: 1" = 10' HORIZONTAL
1" = 10' VERTICAL

I-471 SB
STA. 82+50 TO STA. 83+50

MicroStation v8.11.7.443
E-SHEET NAME:
USER: tvonbehren
DATE PLOTTED: January 2, 2012
FILE NAME: P:\CIVIL\471\6-2021.00\CONTRACT PLANS AND PROPOSAL\CONTRACT PLAN SET\ROADWAY\CROSS SECTIONS.DGN

COUNTY OF	ITEM NO.	SHEET NO.
CAMPBELL	6-2021.00	X16

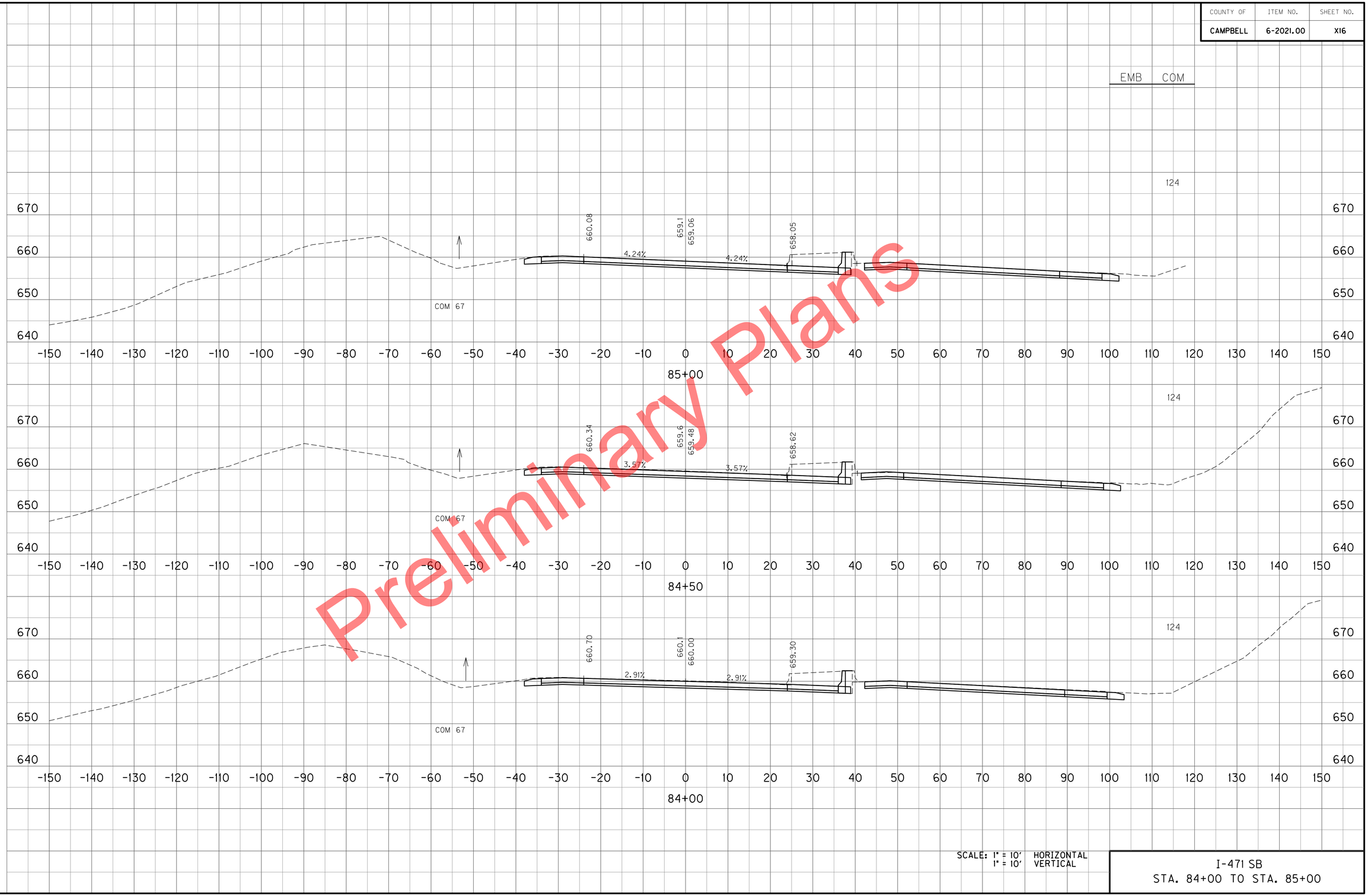

Preliminary Plans

SCALE: 1" = 10' HORIZONTAL
1" = 10' VERTICAL

I-471 SB
STA. 84+00 TO STA. 85+00

MicroStation v8.11.7.443
E-SHEET NAME:
USER: tvonbehren
DATE PLOTTED: January 2, 2012
FILE NAME: P:\CIVIL\147IN6-2021.00\CONTRACT PLANS AND PROPOSAL\CONTRACT PLAN SET\ROADWAY\CROSS SECTIONS.DGN

COUNTY OF	ITEM NO.	SHEET NO.
CAMPBELL	6-2021.00	X17

EMB	COM
183	1801

TOTALS : I-471 SB 71+00 TO STA 85+80.26

Preliminary Plans

EQUATION
Sta 85+80.26 BK =
Sta 89+32.79 AHD

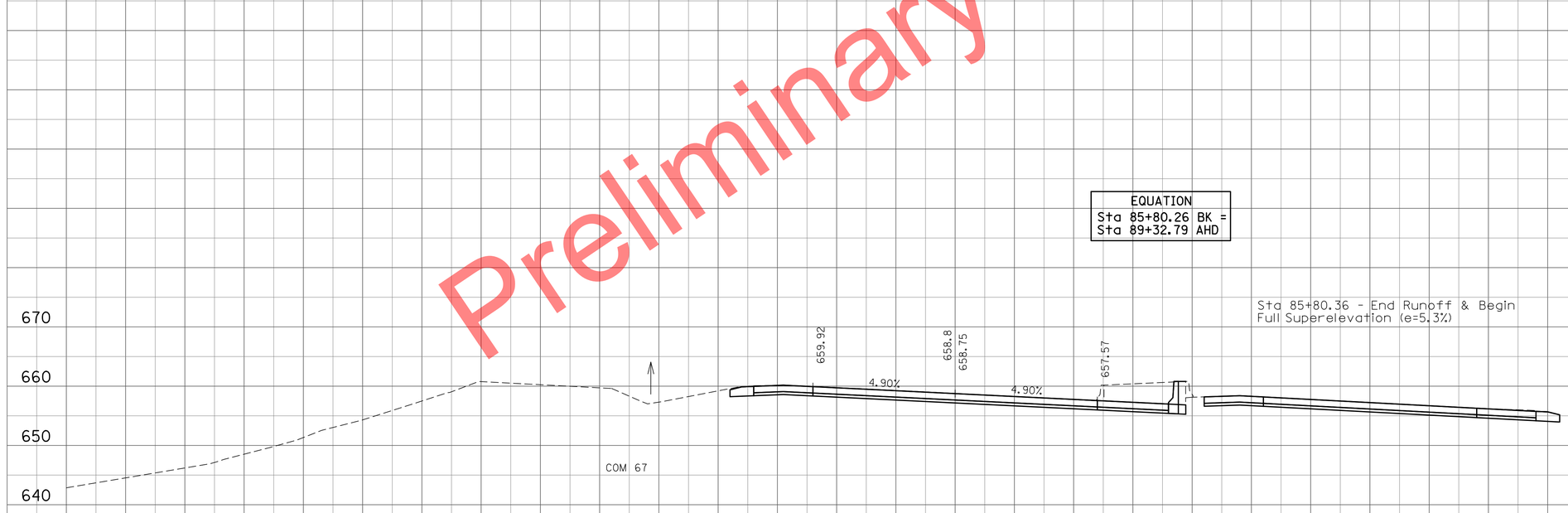

SCALE: 1" = 10' HORIZONTAL
1" = 10' VERTICAL

I-471 SB
STA. 85+50 TO STA. 85+50

MicroStation v8.11.7.443
E-SHEET NAME:
USER: tvonbehren
DATE PLOTTED: January 2, 2012
FILE NAME: P:\CIVIL\471\6-2021.00\CONTRACT PLANS AND PROPOSAL\CONTRACT PLAN SET\ROADWAY\CROSS SECTIONS.DGN

COUNTY OF	ITEM NO.	SHEET NO.
CAMPBELL	6-2021.00	X18

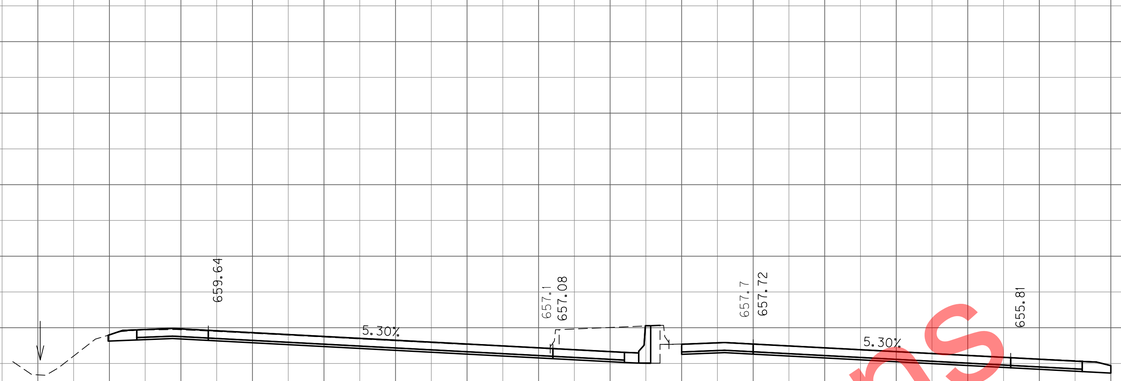



EMB COM

124

122

41

Sta 89+32.79 - End Runoff & Begin Full Superelevation (e=5.3%)

EQUATION
Sta 85+80.26 BK =
Sta 89+32.79 AHD

Preliminary Plans

SCALE: 1" = 10' HORIZONTAL
1" = 10' VERTICAL

I-471
STA. 89+33 TO STA. 90+00

FILE NAME: P:\CIVIL\147IN\6-2021.00\CONTRACT PLANS AND PROPOSAL\CONTRACT PLAN SET\ROADWAY\CROSS SECTIONS.DGN
USER: tvonbehren
DATE PLOTTED: January 2, 2012
E-SHEET NAME:
MicroStation v8.11.7.443

COUNTY OF	ITEM NO.	SHEET NO.
CAMPBELL	6-2021.00	X19

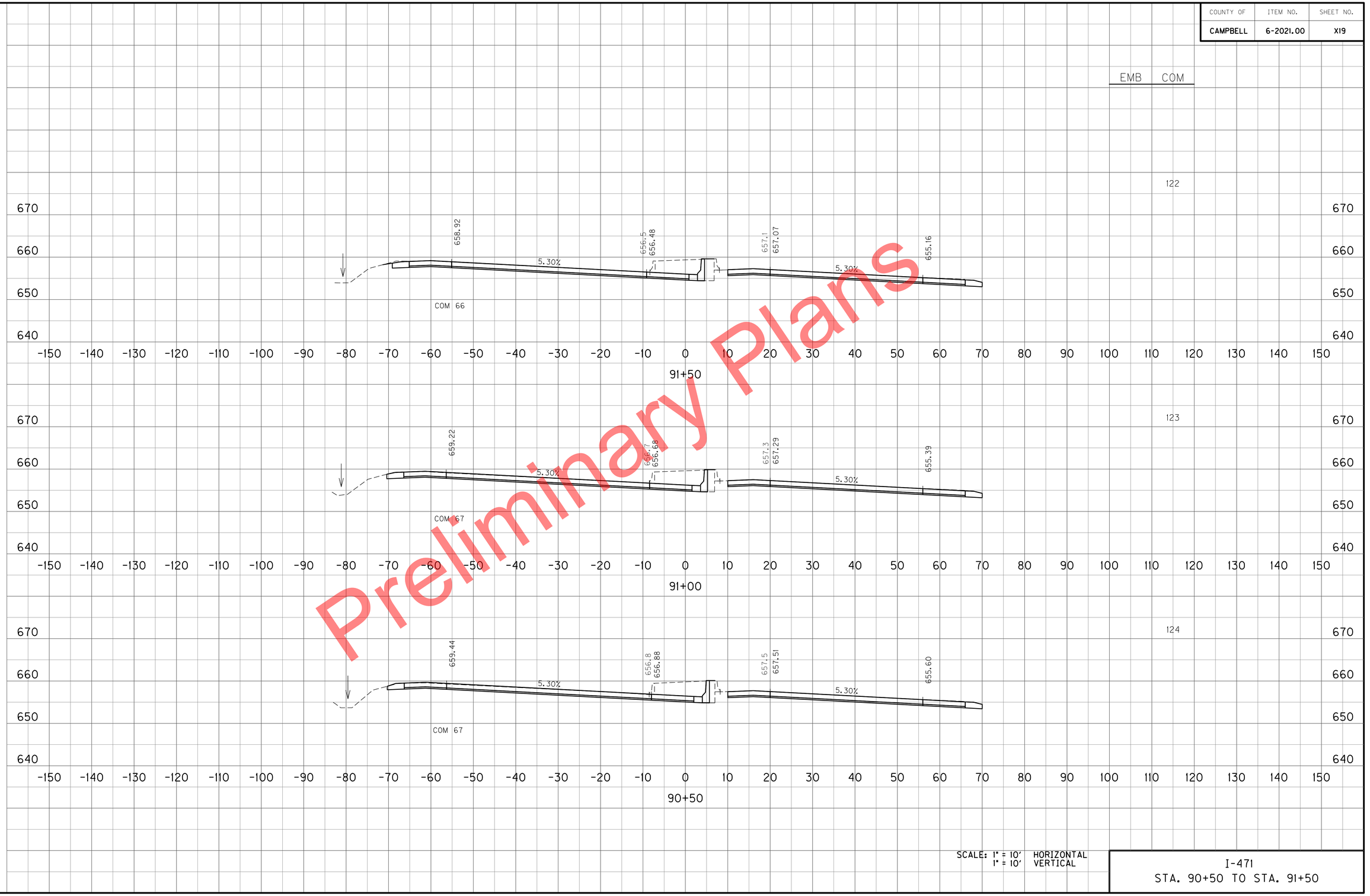

SCALE: 1" = 10' HORIZONTAL
1" = 10' VERTICAL

I-471
STA. 90+50 TO STA. 91+50

FILE NAME: P:\CIVIL\471\6-2021.00\CONTRACT PLANS AND PROPOSAL\CONTRACT PLAN SET\ROADWAY\CROSS SECTIONS.DGN
USER: tvonbehren
DATE PLOTTED: January 2, 2012
E-SHEET NAME:
MicroStation v8.11.7.443

COUNTY OF	ITEM NO.	SHEET NO.
CAMPBELL	6-2021.00	X20

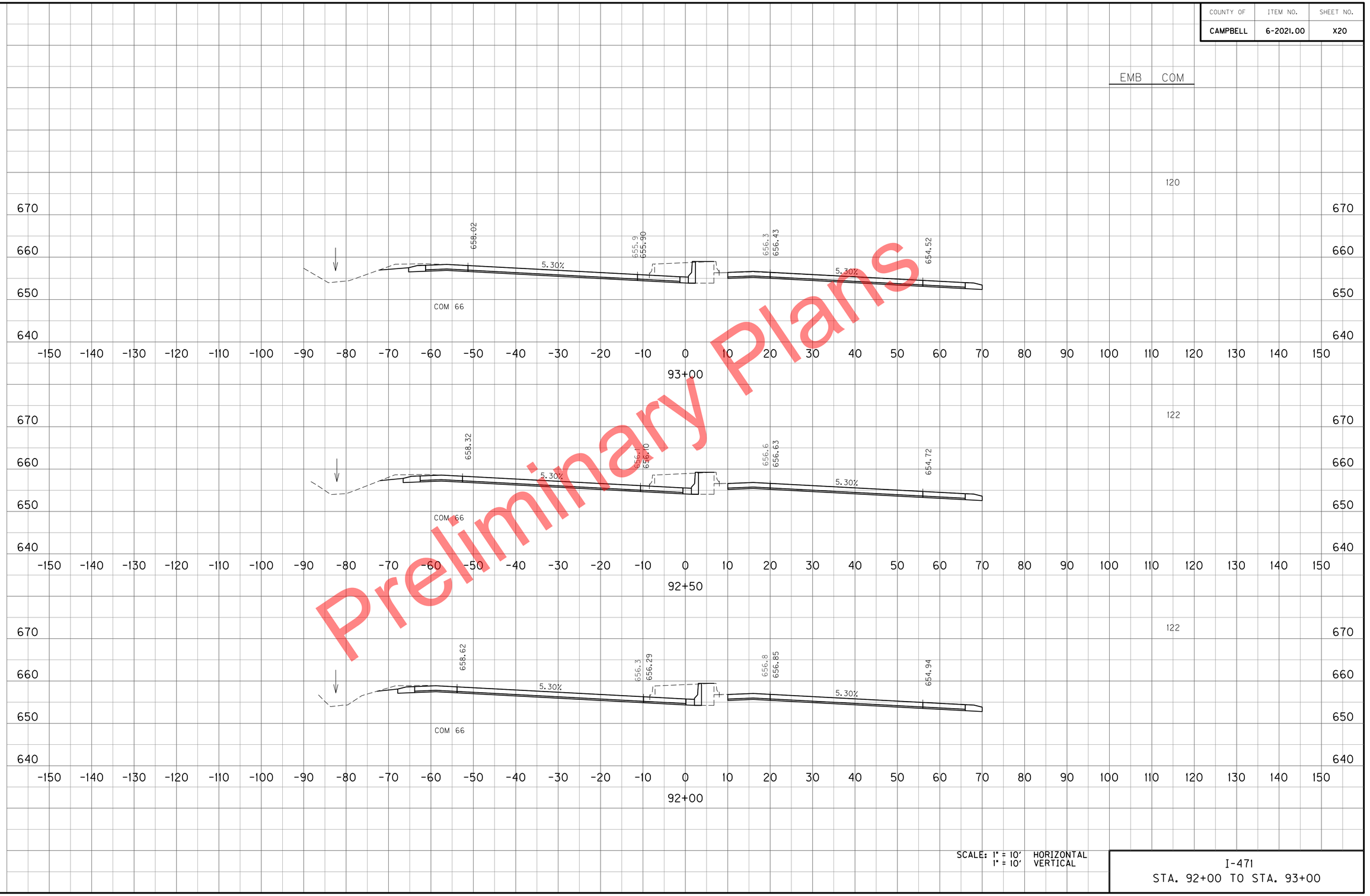

Preliminary Plans

SCALE: 1" = 10' HORIZONTAL
1" = 10' VERTICAL

I-471
STA. 92+00 TO STA. 93+00

MicroStation v8.11.7.443
E-SHEET NAME:
USER: tvonbehren
DATE PLOTTED: January 2, 2012
FILE NAME: P:\CIVIL\471\6-2021.00\CONTRACT PLANS AND PROPOSAL\CONTRACT PLAN SET\ROADWAY\CROSS SECTIONS.DGN

COUNTY OF	ITEM NO.	SHEET NO.
CAMPBELL	6-2021.00	X21

Preliminary Plans

SCALE: 1" = 10' HORIZONTAL
1" = 10' VERTICAL

I-471
STA. 93+50 TO STA. 94+50

FILE NAME: P:\CIVIL\147IN\6-2021.00\CONTRACT PLANS AND PROPOSAL\CONTRACT PLAN SET\ROADWAY\CROSS SECTIONS.DGN
USER: tvonbehren
DATE PLOTTED: January 2, 2012
E-SHEET NAME:
MicroStation v8.11.7.443

COUNTY OF	ITEM NO.	SHEET NO.
CAMPBELL	6-2021.00	X22

EMB COM

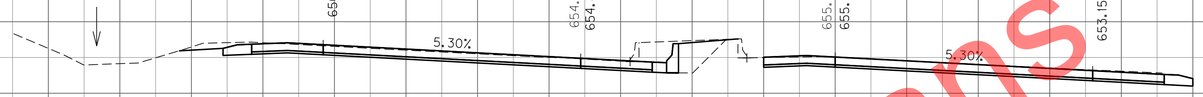



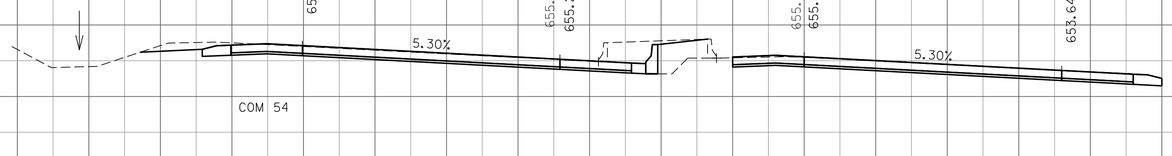

Preliminary Plans

SCALE: 1" = 10' HORIZONTAL
1" = 10' VERTICAL

I-471
STA. 95+00 TO STA. 96+00

FILE NAME: P:\CIVIL\147\N6-2021.00\CONTRACT PLANS AND PROPOSAL\CONTRACT PLAN SET\ROADWAY\CROSS SECTIONS.DGN
USER: tvonbehren
DATE PLOTTED: January 2, 2012
E-SHEET NAME:
MicroStation v8.11.7.443

COUNTY OF	ITEM NO.	SHEET NO.
CAMPBELL	6-2021.00	X23

EMB COM

54

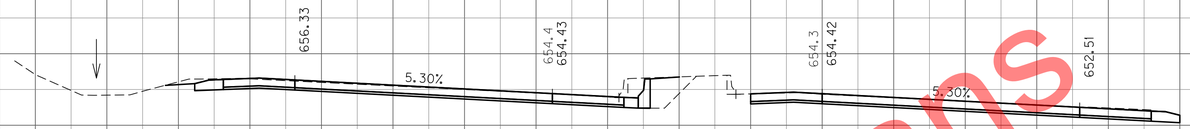

97+50

61

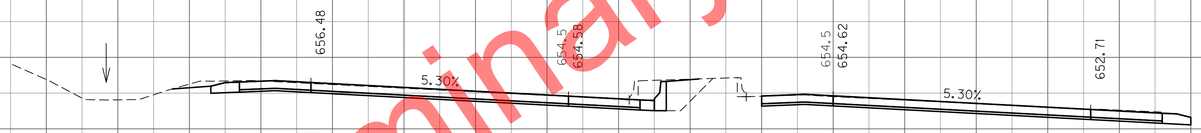

97+00

69

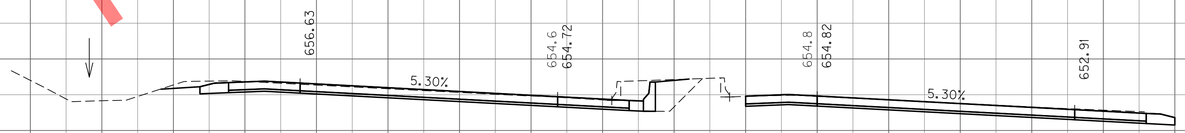

96+50

Preliminary Plans

SCALE: 1" = 10' HORIZONTAL
1" = 10' VERTICAL

I-471
STA. 96+50 TO STA. 97+50

FILE NAME: P:\CIVIL\471\6-2021.00\CONTRACT PLANS AND PROPOSAL\CONTRACT PLAN SET\ROADWAY\CROSS SECTIONS.DGN
USER: tvonbehren
DATE PLOTTED: January 2, 2012
E-SHEET NAME:
MicroStation v8.11.7.443

COUNTY OF	ITEM NO.	SHEET NO.
CAMPBELL	6-2021.00	X24

	EMB	COM
Sta 89+32.79 AHD		
TOTALS : I-471 89+32.79 TO STA 99+00	0	1920

Sta 99+44.89 - End Full Superelevation (e=5.3%) & Begin Runoff

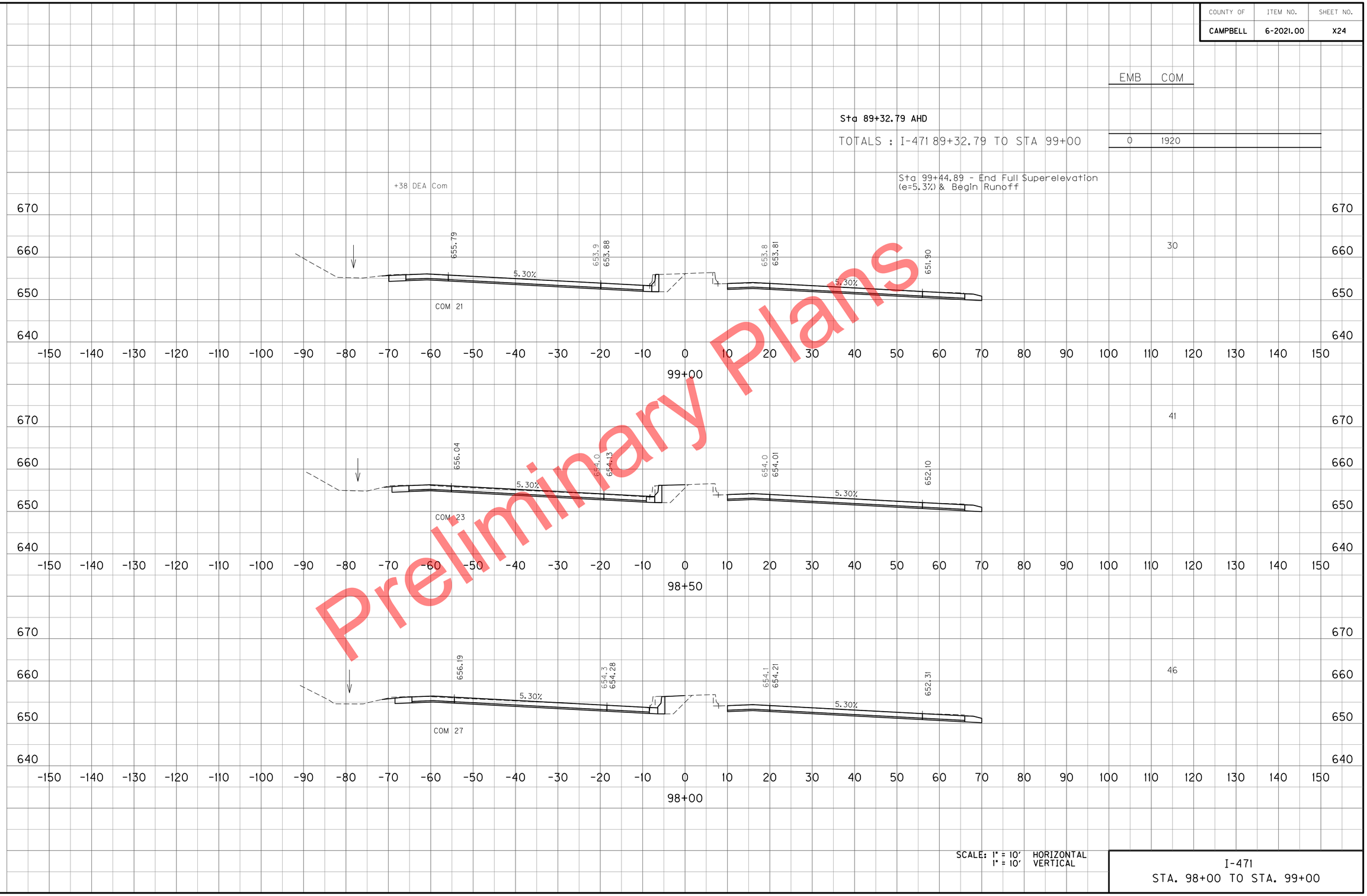

Preliminary Plans

SCALE: 1" = 10' HORIZONTAL
1" = 10' VERTICAL

I-471
STA. 98+00 TO STA. 99+00

MicroStation v8.11.7.443
E-SHEET NAME:
USER: tvanbehren
DATE PLOTTED: January 2, 2012
FILE NAME: P:\CIVIL\471\6-2021.00\CONTRACT PLANS AND PROPOSAL\CONTRACT PLAN SET\ROADWAY\CROSS SECTIONS.DGN

COUNTY OF	ITEM NO.	SHEET NO.
CAMPBELL	6-2021.00	X25

EMB COM

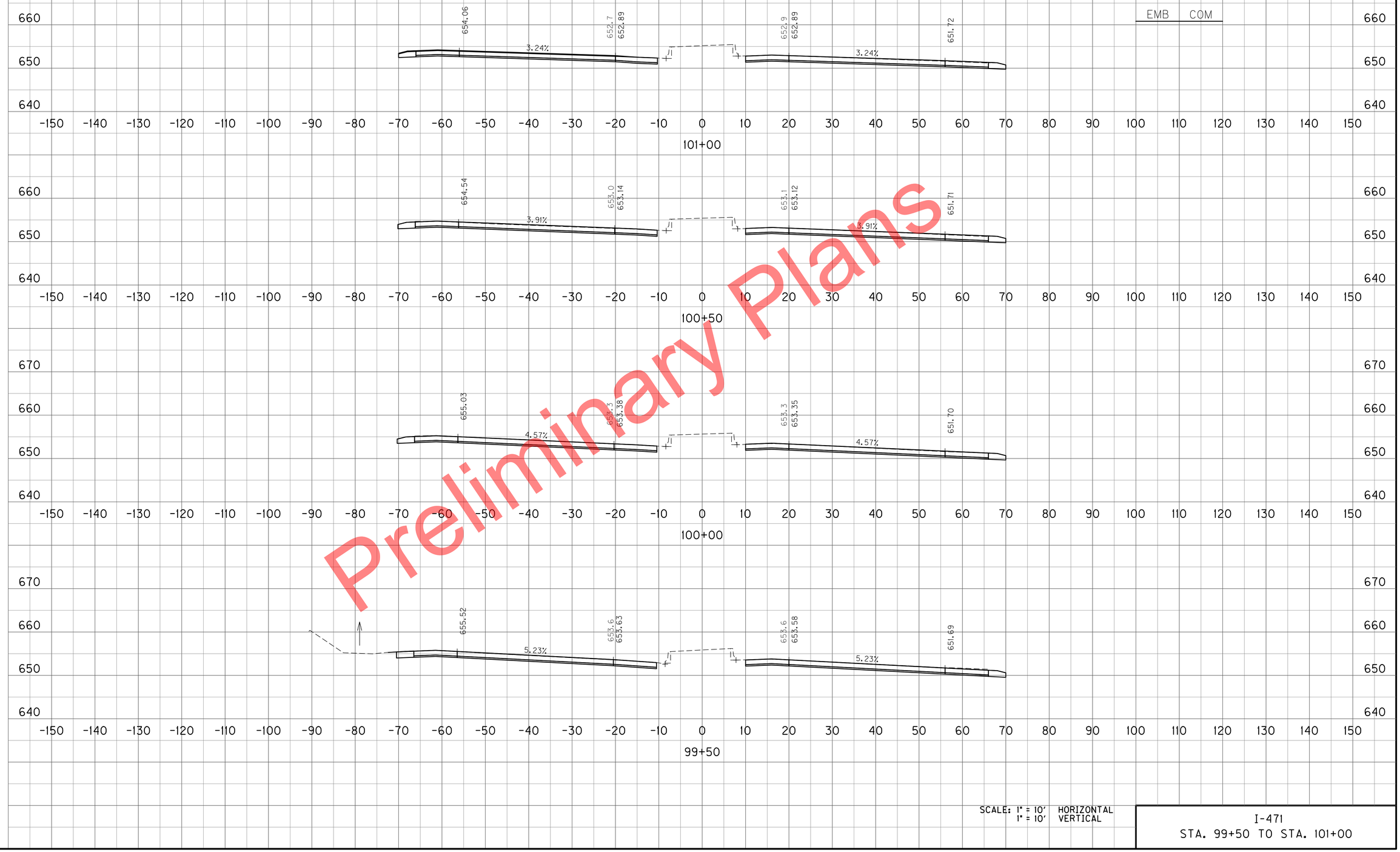

Preliminary Plans

SCALE: 1" = 10' HORIZONTAL
1" = 10' VERTICAL

I-471
STA. 99+50 TO STA. 101+00

MicroStation v8.11.7.443
E-SHEET NAME:
USER: tvanbehren
DATE PLOTTED: January 2, 2012
FILE NAME: P:\CIVIL\I471\6-2021.00\CONTRACT PLANS AND PROPOSAL\CONTRACT PLAN SET\ROADWAY\CROSS SECTIONS.DGN

COUNTY OF	ITEM NO.	SHEET NO.
CAMPBELL	6-2021.00	X26

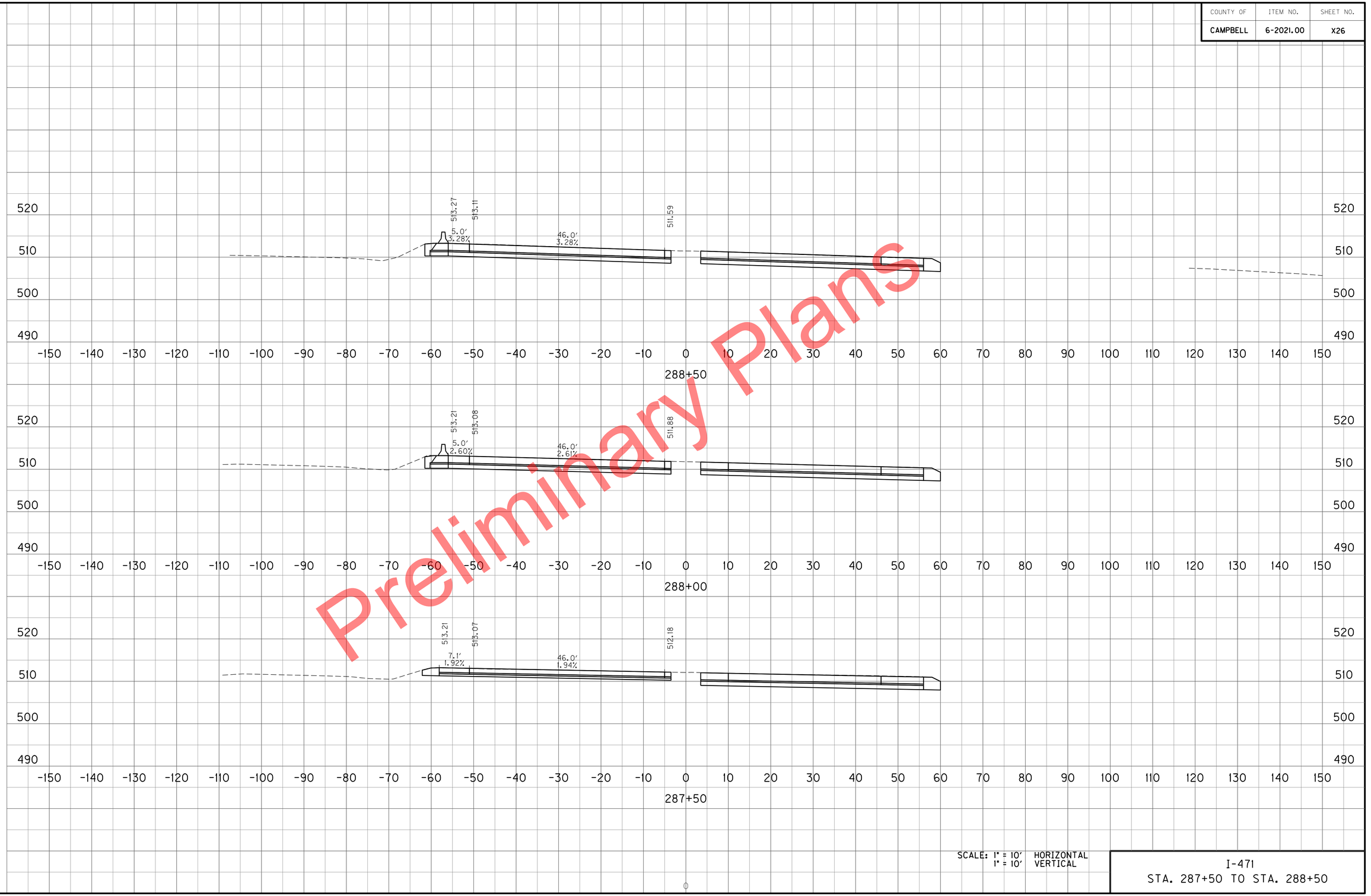

Preliminary Plans

SCALE: 1" = 10' HORIZONTAL
1" = 10' VERTICAL

I-471
STA. 287+50 TO STA. 288+50

FILE NAME: P:\CIVIL\147\N6-2021.00\CONTRACT PLANS AND PROPOSAL\CONTRACT PLAN SET\ROADWAY\CROSS SECTIONS.DGN
USER: tvonbehren
DATE PLOTTED: January 2, 2012
E-SHEET NAME:
MicroStation v8.11.7.443

COUNTY OF	ITEM NO.	SHEET NO.
CAMPBELL	6-2021.00	X27

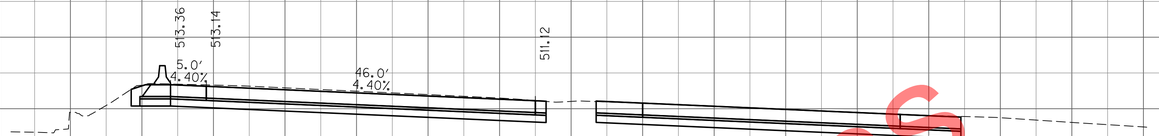

520 510 500 490

-150 -140 -130 -120 -110 -100 -90 -80 -70 -60 -50 -40 -30 -20 -10 0 10 20 30 40 50 60 70 80 90 100 110 120 130 140 150

290+00

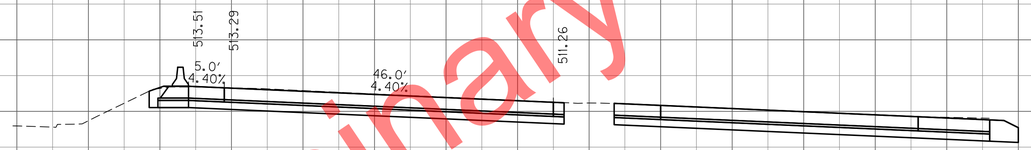

520 510 500 490

-150 -140 -130 -120 -110 -100 -90 -80 -70 -60 -50 -40 -30 -20 -10 0 10 20 30 40 50 60 70 80 90 100 110 120 130 140 150

289+50



520 510 500 490

-150 -140 -130 -120 -110 -100 -90 -80 -70 -60 -50 -40 -30 -20 -10 0 10 20 30 40 50 60 70 80 90 100 110 120 130 140 150

289+00

Preliminary Plans

SCALE: 1" = 10' HORIZONTAL
1" = 10' VERTICAL

I-471
STA. 289+00 TO STA. 290+00

FILE NAME: P:\CIVIL\471\6-2021.00\CONTRACT PLANS AND PROPOSAL\CONTRACT PLAN SET\ROADWAY\CROSS SECTIONS.DGN
USER: tvonbehren
DATE PLOTTED: January 2, 2012
E-SHEET NAME:
MicroStation v8.11.7.443

COUNTY OF	ITEM NO.	SHEET NO.
CAMPBELL	6-2021.00	X28

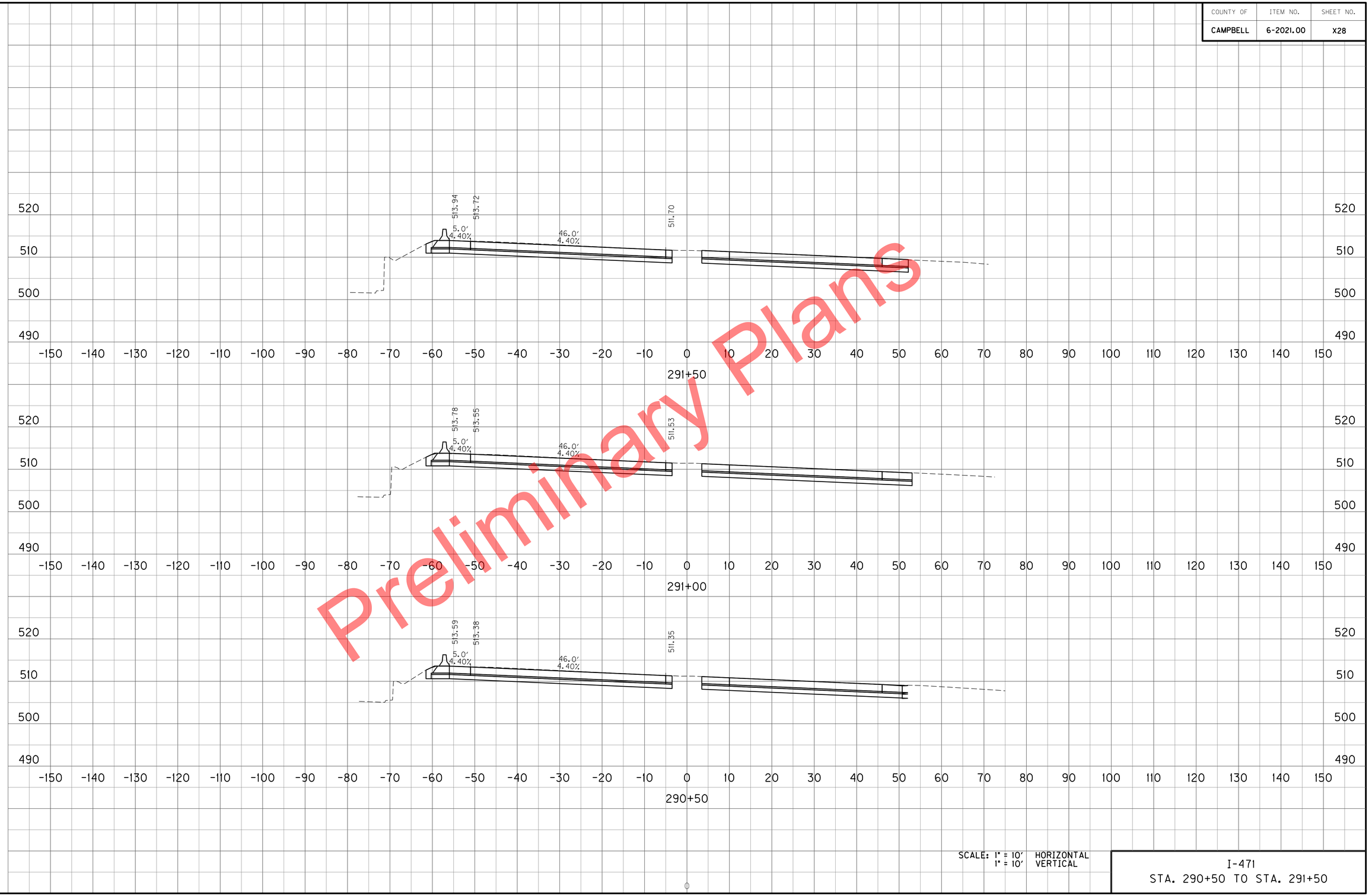

Preliminary Plans

SCALE: 1" = 10' HORIZONTAL
1" = 10' VERTICAL

I-471
STA. 290+50 TO STA. 291+50

FILE NAME: P:\CIVIL\147\N6-2021.00\CONTRACT PLANS AND PROPOSAL\CONTRACT PLAN SET\ROADWAY\CROSS SECTIONS.DGN
USER: tvonbehren
DATE PLOTTED: January 2, 2012
E-SHEET NAME:
MicroStation v8.11.7.443

COUNTY OF	ITEM NO.	SHEET NO.
CAMPBELL	6-2021.00	X29



Preliminary Plans

SCALE: 1" = 10' HORIZONTAL
1" = 10' VERTICAL

I-471
STA. 292+00 TO STA. 292+50

FILE NAME: P:\CIVIL\147\N6-2021.00\CONTRACT PLANS AND PROPOSAL\CONTRACT PLAN SET\ROADWAY\CROSS SECTIONS.DGN
USER: tvonbehren
DATE PLOTTED: January 2, 2012
E-SHEET NAME:
MicroStation v8.11.7.443

COUNTY OF	ITEM NO.	SHEET NO.
CAMPBELL	6-2021.00	X30



Preliminary Plans

530 520 510 500 490 480

-150 -140 -130 -120 -110 -100 -90 -80 -70 -60 -50 -40 -30 -20 -10 0 10 20 30 40 50 60 70 80 90 100 110 120 130 140 150

293+50

293+00

SCALE: 1" = 10' HORIZONTAL
1" = 10' VERTICAL

I-471
STA. 293+00 TO STA. 293+50

FILE NAME: P:\CIVIL\I471\6-2021.00\CONTRACT PLANS AND PROPOSAL\CONTRACT PLAN SET\ROADWAY\CROSS SECTIONS.DGN
USER: tvonbehren
DATE PLOTTED: January 2, 2012
E-SHEET NAME:
MicroStation v8.11.7.443

COUNTY OF	ITEM NO.	SHEET NO.
CAMPBELL	6-2021.00	X31



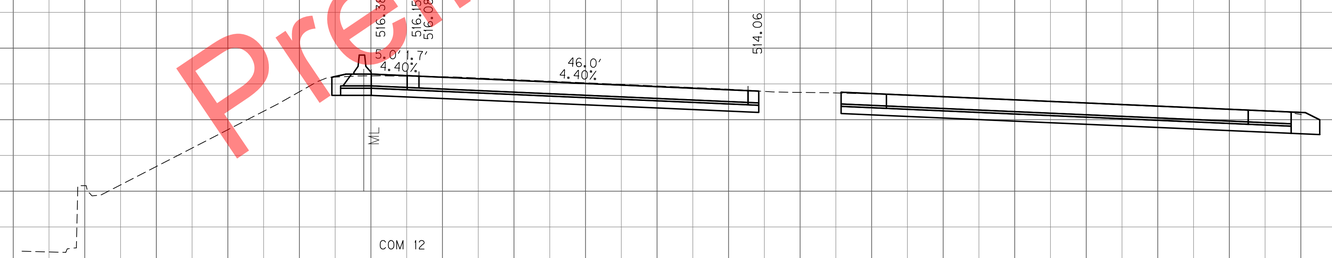

Preliminary Plans

COM

40

28

11

530 520 510 500 490 480 470

-150 -140 -130 -120 -110 -100 -90 -80 -70 -60 -50 -40 -30 -20 -10 0 10 20 30 40 50 60 70 80 90 100 110 120 130 140 150

294+50

294+00

+75 Begin Com

0

SCALE: 1" = 10' HORIZONTAL
1" = 10' VERTICAL

I-471
STA. 294+00 TO STA. 294+50

FILE NAME: P:\CIVIL\I471\6-2021.00\CONTRACT PLANS AND PROPOSAL\CONTRACT PLAN SET\ROADWAY\CROSS SECTIONS.DGN
USER: tvanbehren
DATE PLOTTED: January 2, 2012
E-SHEET NAME:
MicroStation v8.11.7.443

COUNTY OF	ITEM NO.	SHEET NO.
CAMPBELL	6-2021.00	X32

TOTALS : I-471 STA 293+75 TO STA 296+25

COM 240

+25 End Com

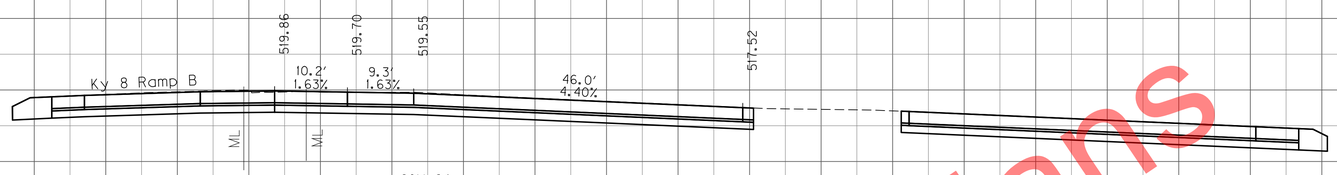

22

296+00

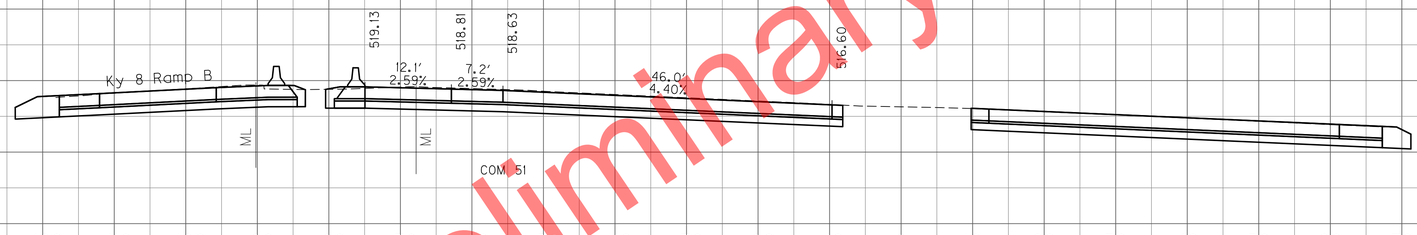

69

295+50

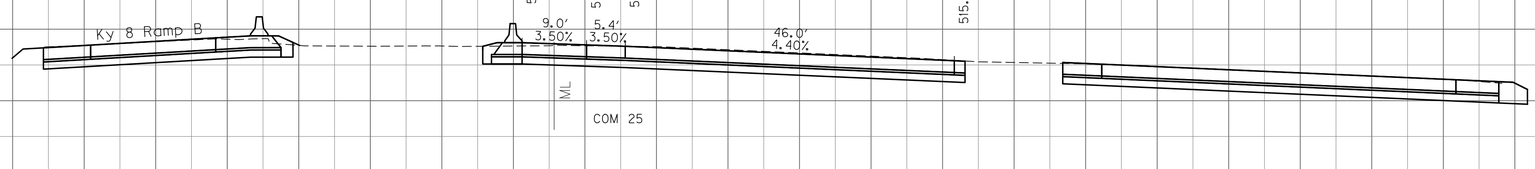

70

295+00

SCALE: 1" = 10' HORIZONTAL
1" = 10' VERTICAL

I-471
STA. 295+00 TO STA. 296+00

Preliminary Plans

FILE NAME: P:\CIVIL\471\6-2021.00\CONTRACT PLANS AND PROPOSAL\CONTRACT PLAN SET\ROADWAY\CROSS SECTIONS.DGN
USER: tvanbehren
DATE PLOTTED: January 2, 2012
E-SHEET NAME:
MicroStation v8.11.7.443

COUNTY OF	ITEM NO.	SHEET NO.
CAMPBELL	6-2021.00	X33

Preliminary Plans

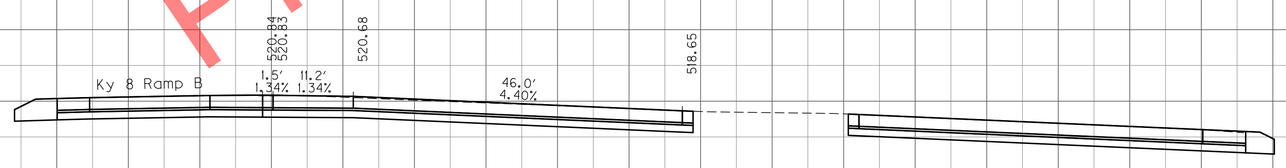

530
520
510
500

-150 -140 -130 -120 -110 -100 -90 -80 -70 -60 -50 -40 -30 -20 -10 0 10 20 30 40 50 60 70 80 90 100 110 120 130 140 150

296+50

SCALE: 1" = 10' HORIZONTAL
1" = 10' VERTICAL

I-471
STA. 296+50 TO STA. 296+50

FILE NAME: P:\CIVIL\I471\6-2021.00\CONTRACT PLANS AND PROPOSAL\CONTRACT PLAN SET\ROADWAY\CROSS SECTIONS.DGN
USER: tvanbenren
DATE PLOTTED: January 2, 2012
E-SHEET NAME:
MicroStation v8.11.7.443

COUNTY OF	ITEM NO.	SHEET NO.
CAMPBELL	6-2021.00	X34



STA 1197+60 ~ BEGIN
I-275 WB

SCALE: 1" = 10' HORIZONTAL
1" = 10' VERTICAL

I-275 WB
STA. 1197+60 TO STA. 1198+00

Preliminary Plans

FILE NAME: P:\CIVIL\1471\6-2021.00\CONTRACT PLANS AND PROPOSAL\CONTRACT PLAN SET\ROADWAY\CROSS SECTIONS.DGN
USER: tvonbehren
DATE PLOTTED: January 2, 2012
E-SHEET NAME:
MicroStation v8.11.7.443

COUNTY OF	ITEM NO.	SHEET NO.
CAMPBELL	6-2021.00	X35

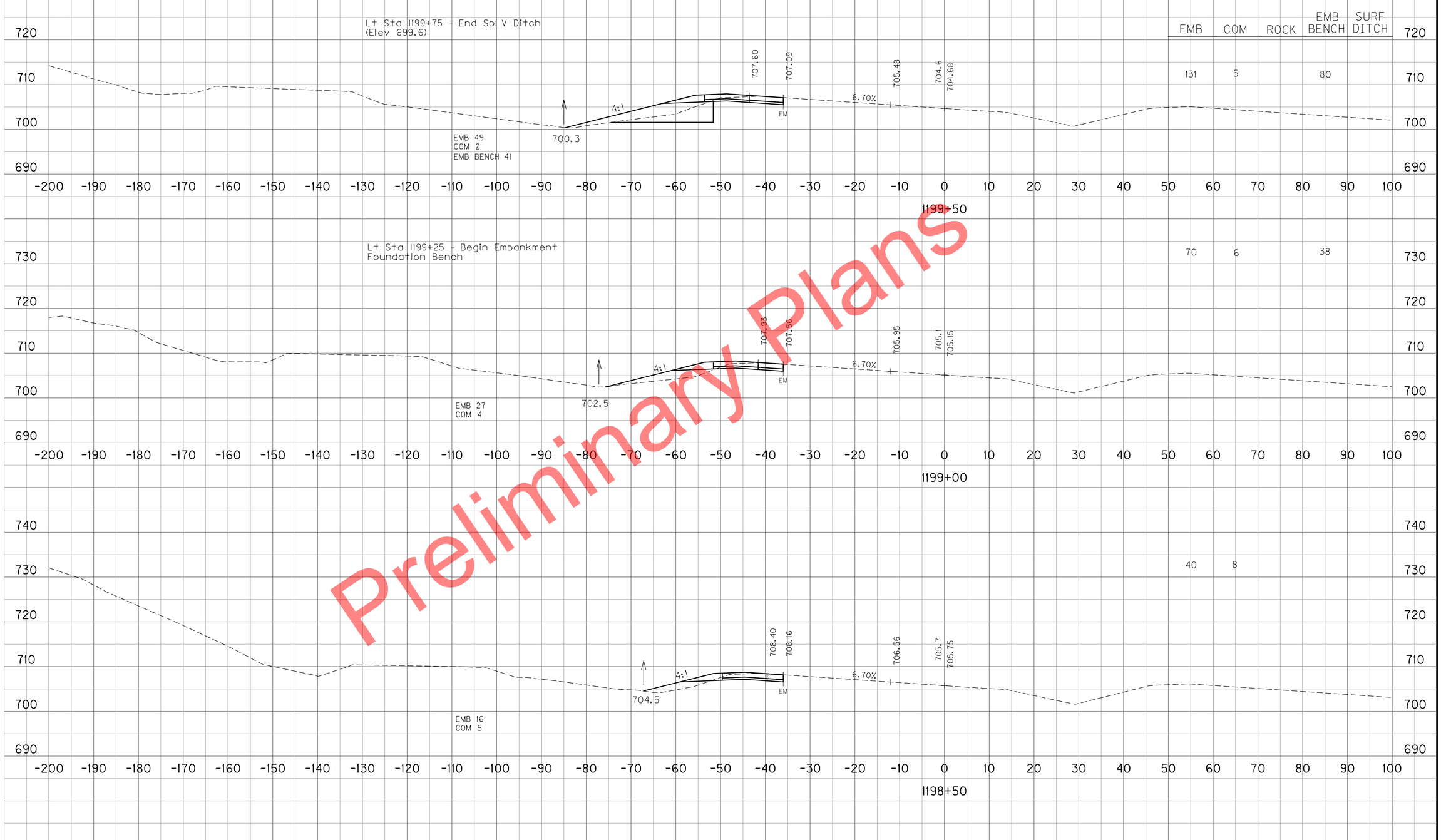

EMB	COM	ROCK	EMB BENCH	SURF DITCH
131	5		80	
70	6		38	
40	8			

Preliminary Plans

SCALE: 1" = 10' HORIZONTAL
1" = 10' VERTICAL

I-275 WB
STA. 1198+50 TO STA. 1199+50

FILE NAME: P:\CIVIL\I471\6-2021.00\CONTRACT PLANS AND PROPOSAL\CONTRACT PLAN SET\ROADWAY\CROSS SECTIONS.DGN
USER: tvonbehren
DATE PLOTTED: January 2, 2012
E-SHEET NAME:
MicroStation v8.11.7.443

COUNTY OF	ITEM NO.	SHEET NO.
CAMPBELL	6-2021.00	X36

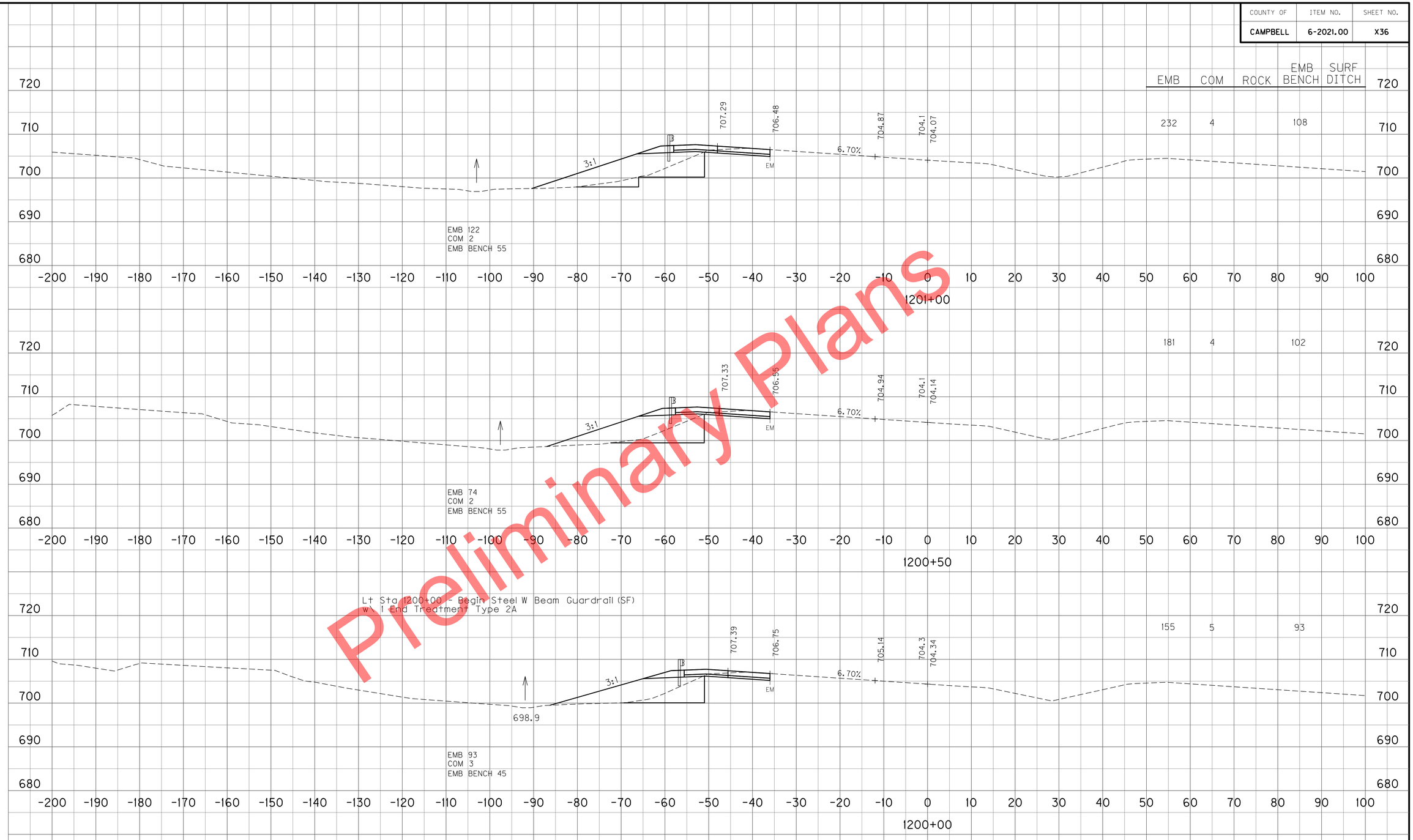

Preliminary Plans

SCALE: 1" = 10' HORIZONTAL
1" = 10' VERTICAL

I-275 WB
STA. 1200+00 TO STA. 1201+00

FILE NAME: P:\CIVIL\147N6-2021.00\CONTRACT PLANS AND PROPOSAL\CONTRACT PLAN SET\ROADWAY\CROSS SECTIONS.DGN
USER: tvonbehren
DATE PLOTTED: January 2, 2012
E-SHEET NAME:
MicroStation v8.11.7.443

COUNTY OF	ITEM NO.	SHEET NO.
CAMPBELL	6-2021.00	X37

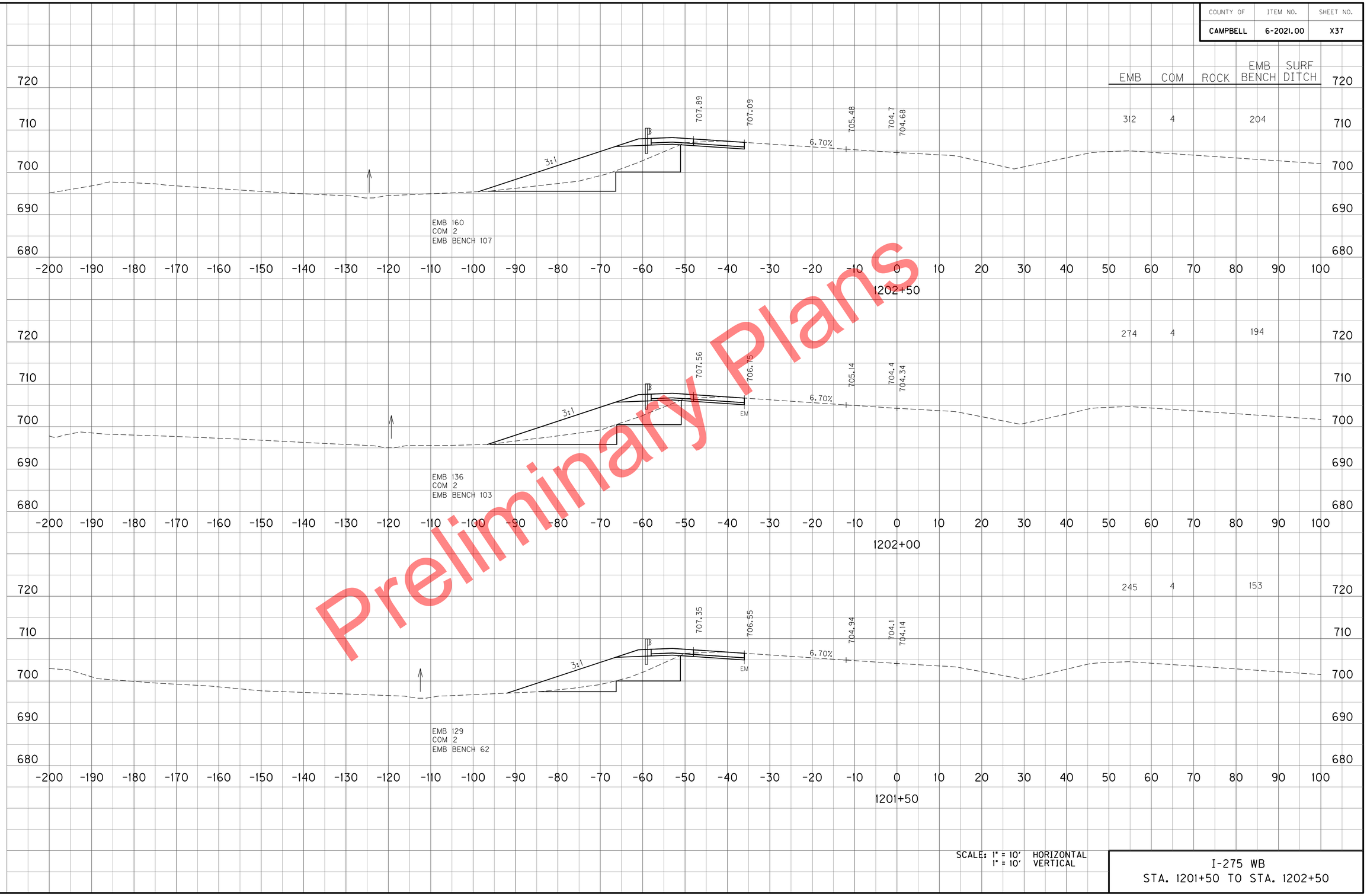

Preliminary Plans

SCALE: 1" = 10' HORIZONTAL
1" = 10' VERTICAL

I-275 WB
STA. 1201+50 TO STA. 1202+50

FILE NAME: P:\CIVIL\147\16-2021.00\CONTRACT PLANS AND PROPOSAL\CONTRACT PLAN SET\ROADWAY\CROSS SECTIONS.DGN
USER: tvonbehren
DATE PLOTTED: January 2, 2012
E-SHEET NAME:
MicroStation v8.11.7.443

COUNTY OF	ITEM NO.	SHEET NO.
CAMPBELL	6-2021.00	X38

EMB	COM	ROCK	EMB BENCH	SURF DITCH
350	4		238	

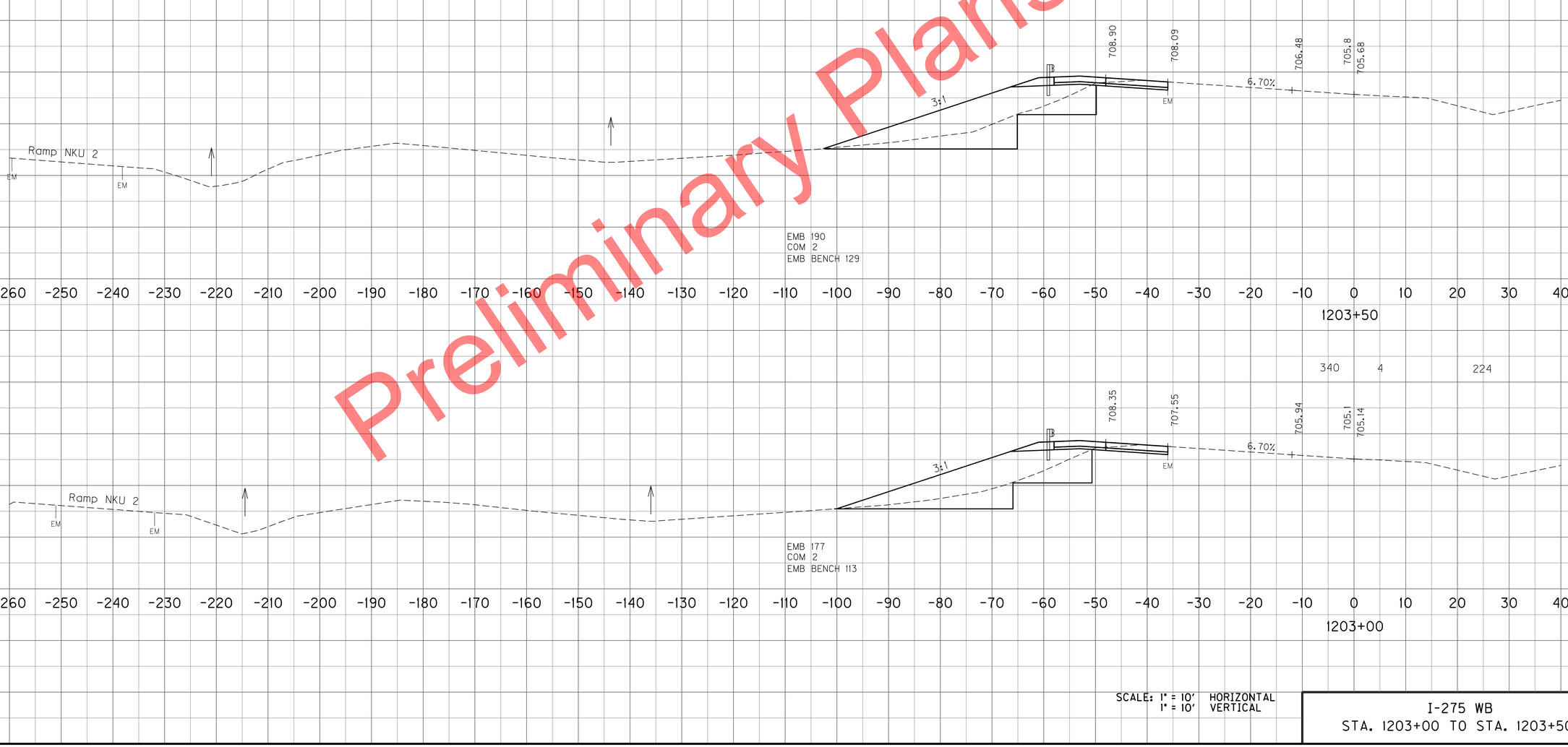

Preliminary Plans

SCALE: 1" = 10' HORIZONTAL
1" = 10' VERTICAL

I-275 WB
STA. 1203+00 TO STA. 1203+50

FILE NAME: P:\CIVIL\147IN6-2021.00\CONTRACT PLANS AND PROPOSAL\CONTRACT PLAN SET\ROADWAY\CROSS SECTIONS.DGN
USER: tvonbehren
DATE PLOTTED: January 2, 2012
E-SHEET NAME:
MicroStation v8.11.7.443

COUNTY OF	ITEM NO.	SHEET NO.
CAMPBELL	6-2021.00	X39

EMB	COM	ROCK	EMB BENCH	SURF DITCH
494	4		314	

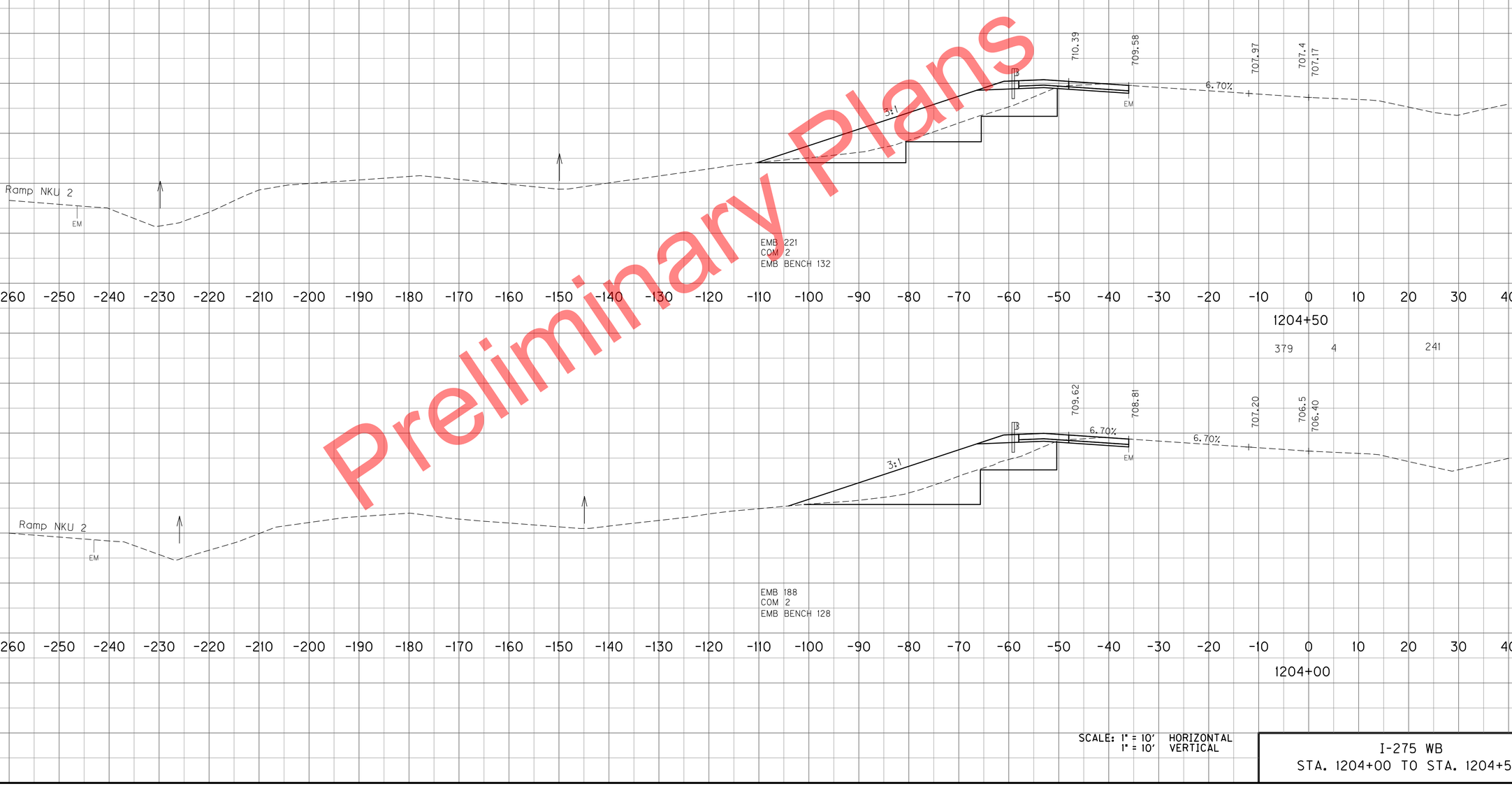

Preliminary Plans

SCALE: 1" = 10' HORIZONTAL
1" = 10' VERTICAL

I-275 WB
STA. 1204+00 TO STA. 1204+50

FILE NAME: P:\CIVIL\147IN\6-2021.00\CONTRACT PLANS AND PROPOSAL\CONTRACT PLAN SET\ROADWAY\CROSS SECTIONS.DGN
USER: tvonbehren
DATE PLOTTED: January 2, 2012
E-SHEET NAME:
MicroStation v8.11.7.443

COUNTY OF	ITEM NO.	SHEET NO.
CAMPBELL	6-2021.00	X40

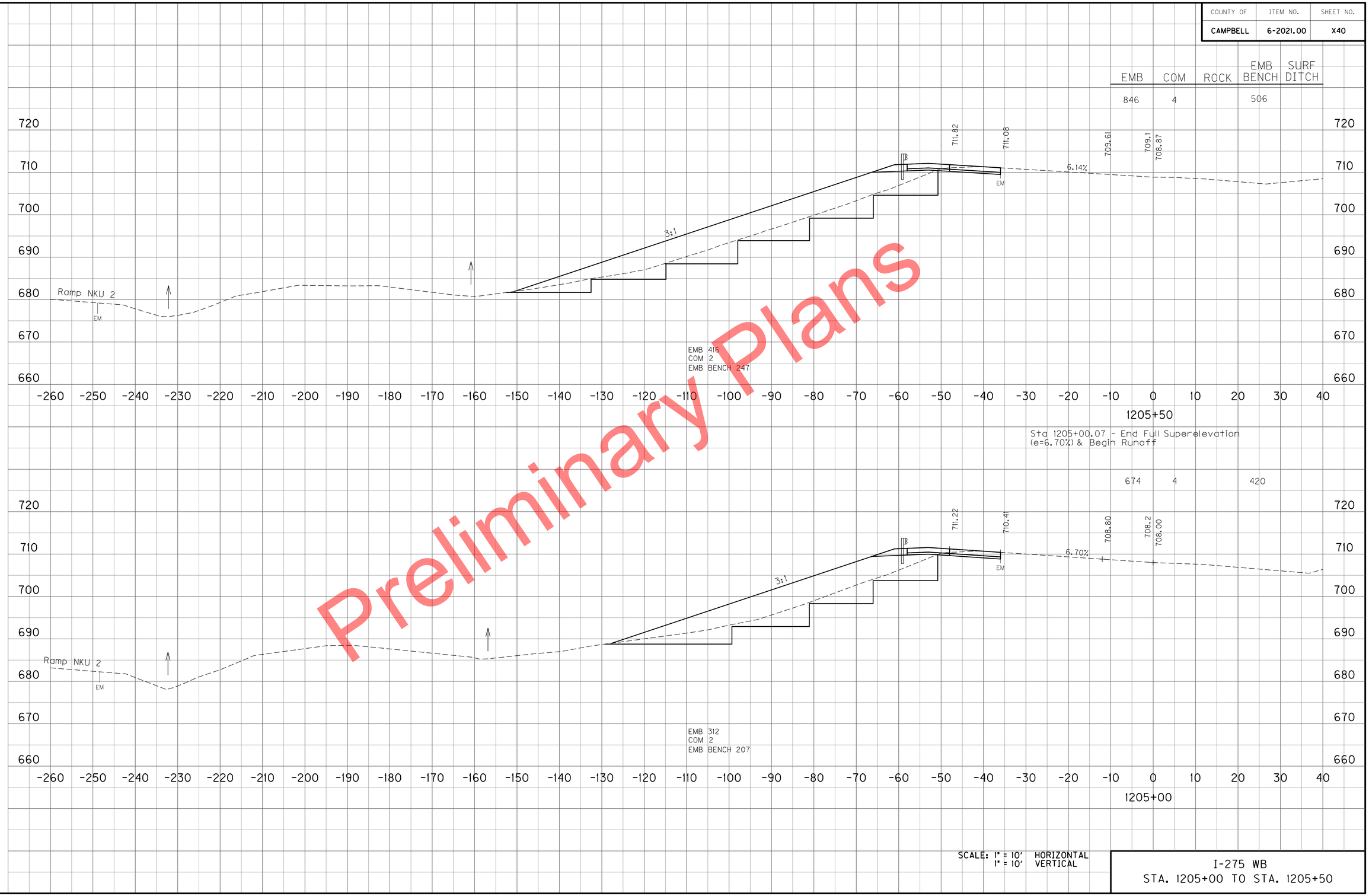

Preliminary Plans

SCALE: 1" = 10' HORIZONTAL
1" = 10' VERTICAL

I-275 WB
STA. 1205+00 TO STA. 1205+50

FILE NAME: P:\CIVIL\147IN6-2021.00\CONTRACT PLANS AND PROPOSAL\CONTRACT PLAN SET\ROADWAY\CROSS SECTIONS.DGN
USER: tvonbehren
DATE PLOTTED: January 2, 2012
E-SHEET NAME:
MicroStation v8.11.7.443

COUNTY OF	ITEM NO.	SHEET NO.
CAMPBELL	6-2021.00	X41

EMB	COM	ROCK	EMB BENCH	SURF DITCH
1154	6		689	

Lt Sta 1206+75 - End Spl V Ditch
(Elev 667.9)

Ramp NKU 2

EM

669.4

3:1

712.90

712.30

711.09

710.8

710.49

5.02%

EM

EMB 615
COM 4
EMB BENCH 353

1206+50

EMB	COM	ROCK	EMB BENCH	SURF DITCH
1031	6		605	

712.38

711.71

710.37

710.0

709.70

5.58%

EM

3:1

Ramp NKU 2

EM

676.5

EMB 498
COM 2
EMB BENCH 300

1206+00

Lt Sta 1205+70 - Begin Spl V Ditch
(Elev 679.6)

Preliminary Plans

SCALE: 1" = 10' HORIZONTAL
1" = 10' VERTICAL

I-275 WB
STA. 1206+00 TO STA. 1206+50

FILE NAME: P:\CIVIL\147\N6-2021.00\CONTRACT PLANS AND PROPOSAL\CONTRACT PLAN SET\ROADWAY\CROSS SECTIONS.DGN
USER: tvonbehren
DATE PLOTTED: January 2, 2012
E-SHEET NAME:
MicroStation v8.11.7.443

COUNTY OF	ITEM NO.	SHEET NO.
CAMPBELL	6-2021.00	X42

EMB	COM	ROCK	EMB BENCH	SURF DITCH
413	4		726	



EMB	COM	ROCK	EMB BENCH	SURF DITCH
847	4		727	

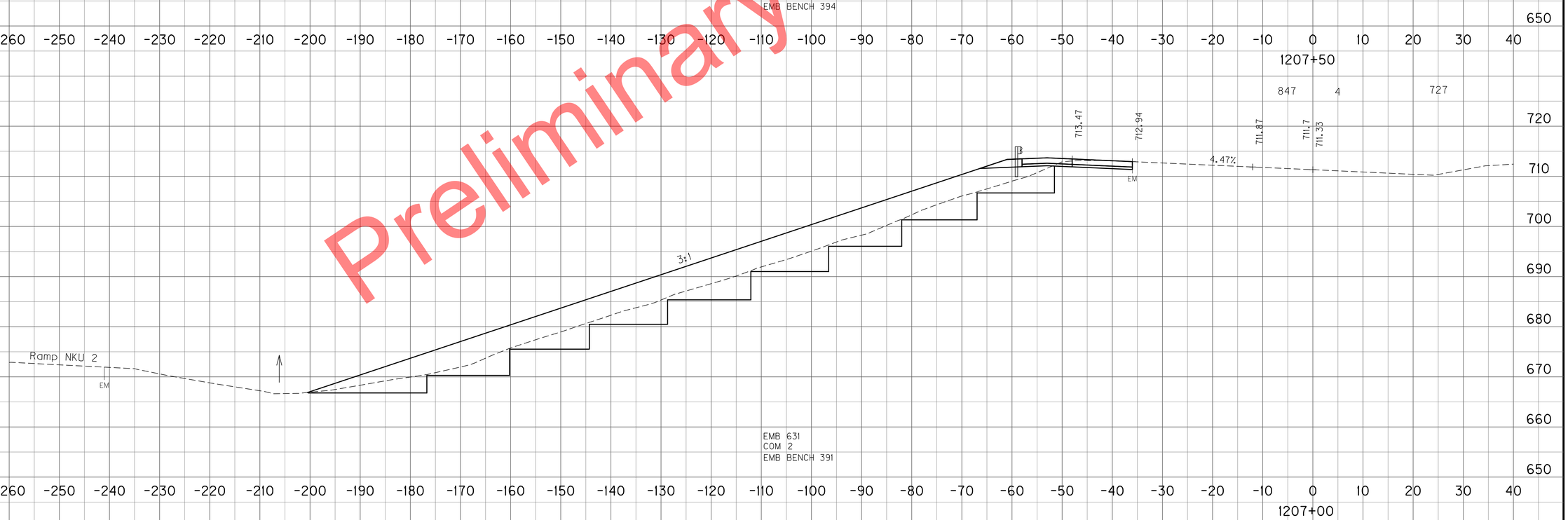

Preliminary Plans

SCALE: 1" = 10' HORIZONTAL
1" = 10' VERTICAL

I-275 WB
STA. 1207+00 TO STA. 1207+50

MicroStation v8.11.7.443
E-SHEET NAME:
USER: tvanbehren
DATE PLOTTED: January 2, 2012
FILE NAME: P:\CIVIL\147\6-2021.00\CONTRACT PLANS AND PROPOSAL\CONTRACT PLAN SET\ROADWAY\CROSS SECTIONS.DGN

COUNTY OF	ITEM NO.	SHEET NO.
CAMPBELL	6-2021.00	X43

EMB	COM	ROCK	EMB BENCH	SURF DITCH
466	5		718	

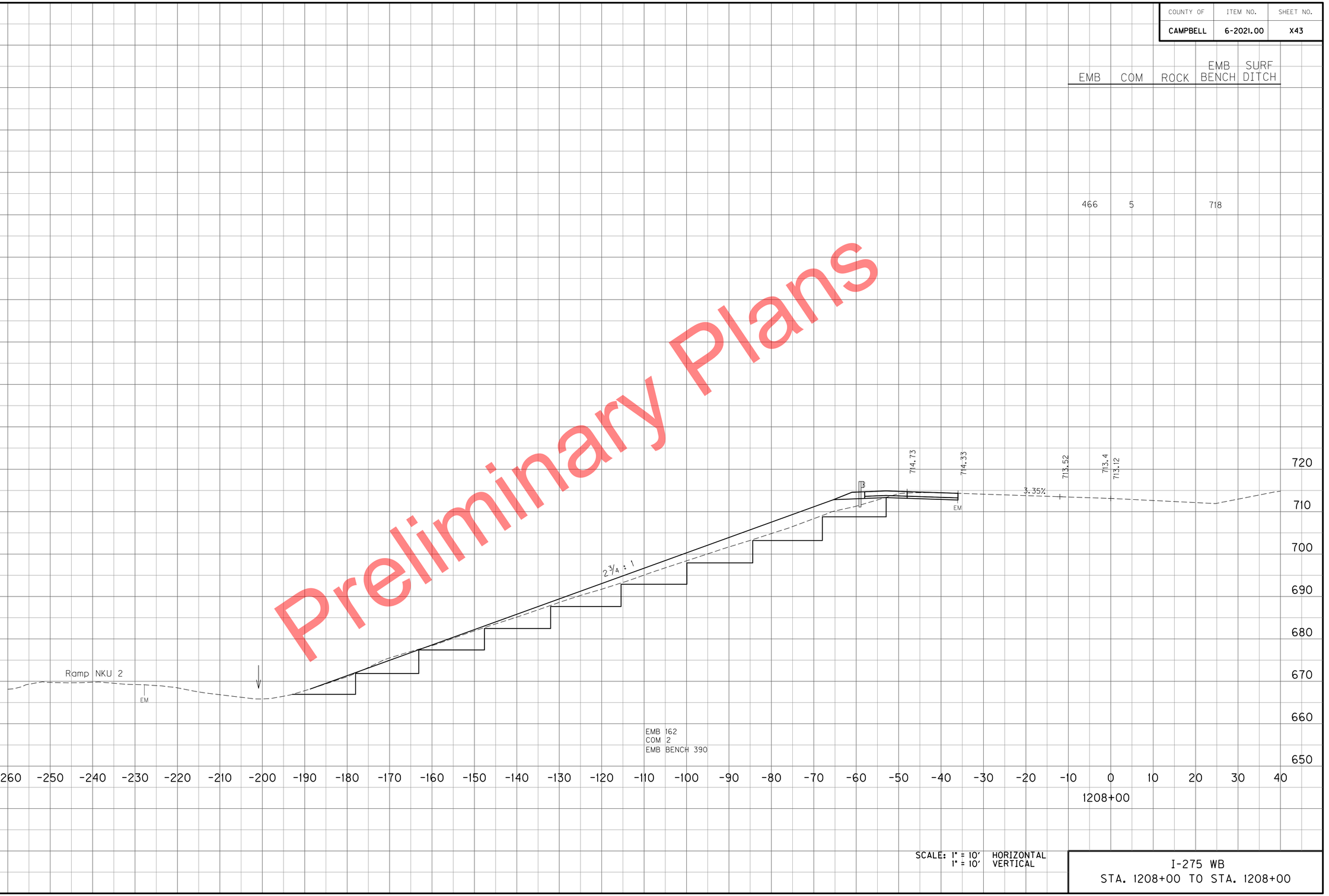

SCALE: 1" = 10' HORIZONTAL
1" = 10' VERTICAL

I-275 WB
STA. 1208+00 TO STA. 1208+00

FILE NAME: P:\CIVIL\147IN\6-2021.00\CONTRACT PLANS AND PROPOSAL\CONTRACT PLAN SET\ROADWAY\CROSS SECTIONS.DGN
USER: tvonbehren
DATE PLOTTED: January 2, 2012
E-SHEET NAME:
MicroStation v8.11.7.443

COUNTY OF	ITEM NO.	SHEET NO.
CAMPBELL	6-2021.00	X44

EMB	COM	ROCK	EMB BENCH	SURF DITCH
568	3		642	

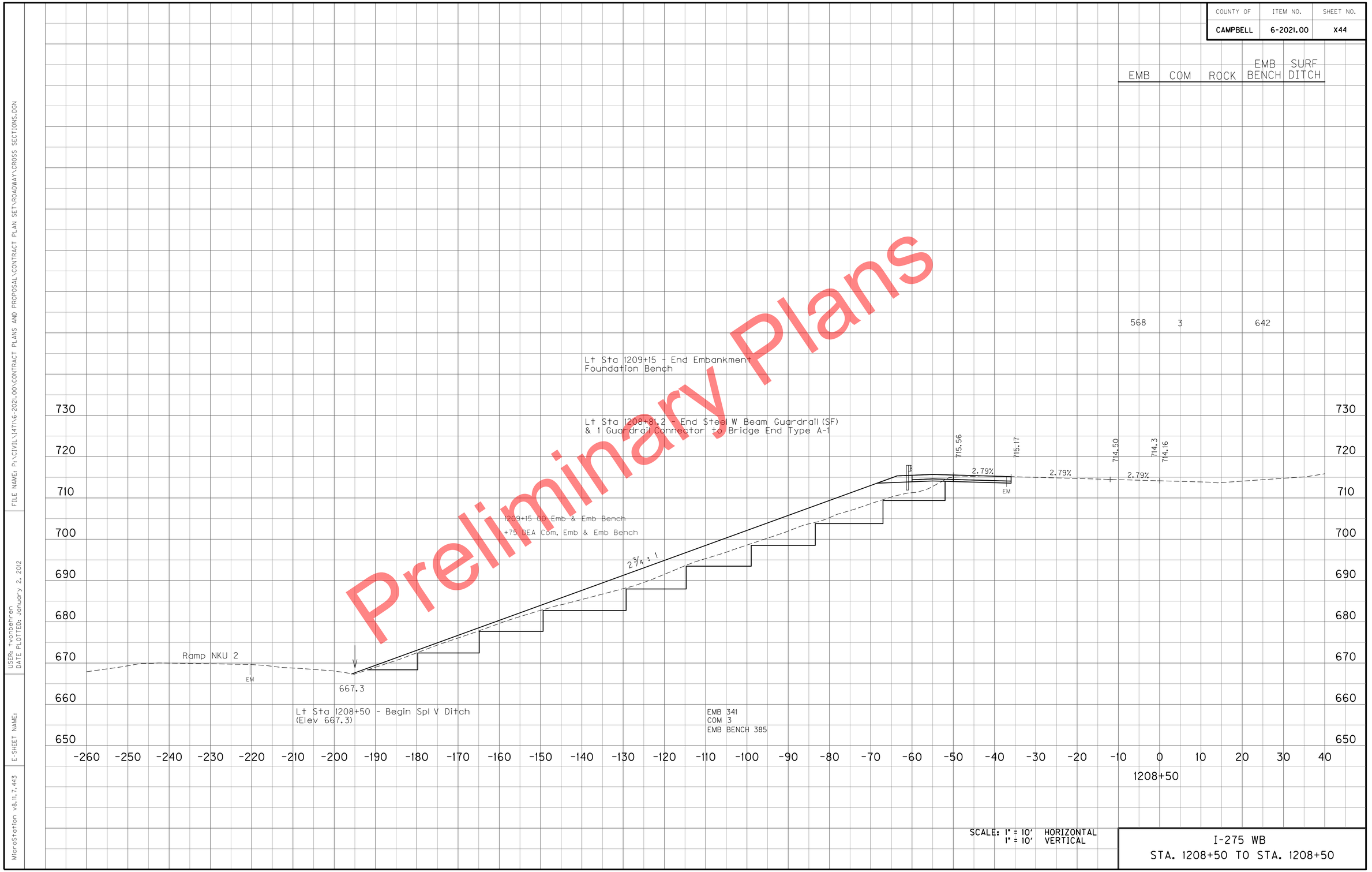

Preliminary Plans

SCALE: 1" = 10' HORIZONTAL
1" = 10' VERTICAL

I-275 WB
STA. 1208+50 TO STA. 1208+50

FILE NAME: P:\CIVIL\147IN6-2021.00\CONTRACT PLANS AND PROPOSAL\CONTRACT PLAN SET\ROADWAY\CROSS SECTIONS.DGN
USER: tvonbehren
DATE PLOTTED: January 2, 2012
E-SHEET NAME:
MicroStation v8.11.7.443

COUNTY OF	ITEM NO.	SHEET NO.
CAMPBELL	6-2021.00	X45

EMB	COM	ROCK	EMB BENCH	SURF DITCH

Sta 1209+20.90 - Reverse Crown

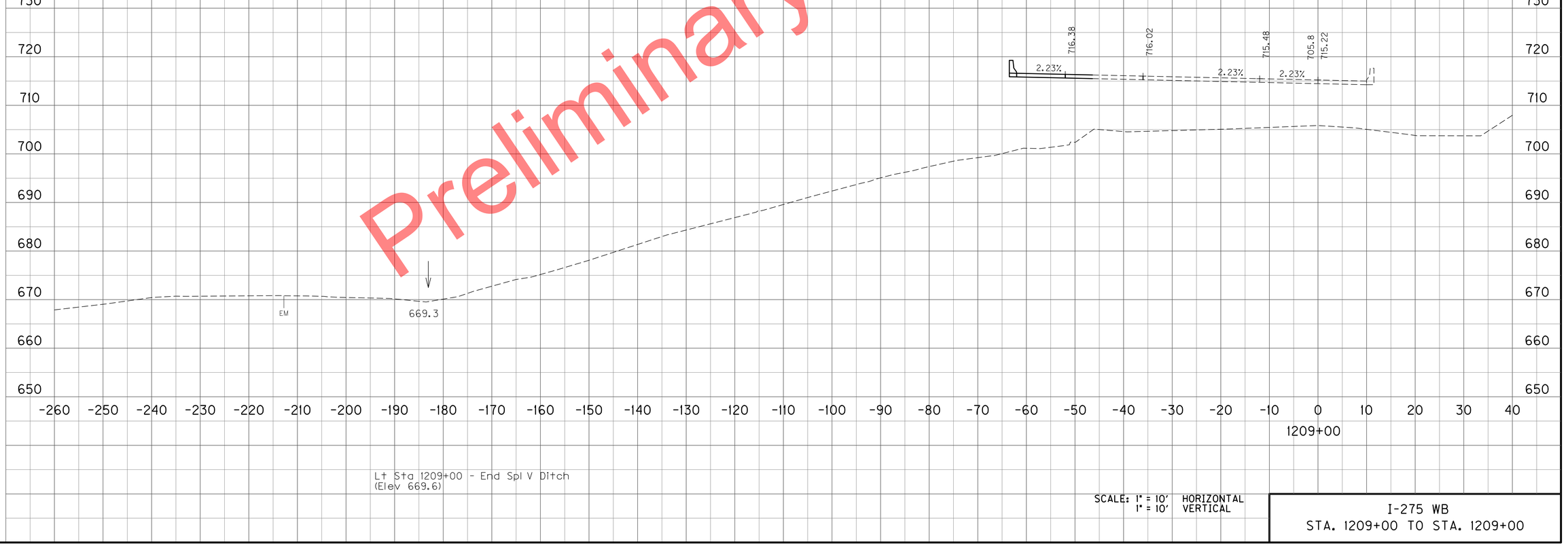

Lt Sta 1209+00 - End Spl V Ditch
(Elev 669.6)

SCALE: 1" = 10' HORIZONTAL
1" = 10' VERTICAL

I-275 WB
STA. 1209+00 TO STA. 1209+00

Preliminary Plans

MicroStation v8.11.7.443
E-SHEET NAME:
USER: tvanbenren
DATE PLOTTED: January 2, 2012
FILE NAME: P:\CIVIL\147\6-2021.00\CONTRACT PLANS AND PROPOSAL\CONTRACT PLAN SET\ROADWAY\CROSS SECTIONS.DGN

COUNTY OF	ITEM NO.	SHEET NO.
CAMPBELL	6-2021.00	X46

EMB	COM	ROCK	EMB BENCH	SURF DITCH

Preliminary Plans

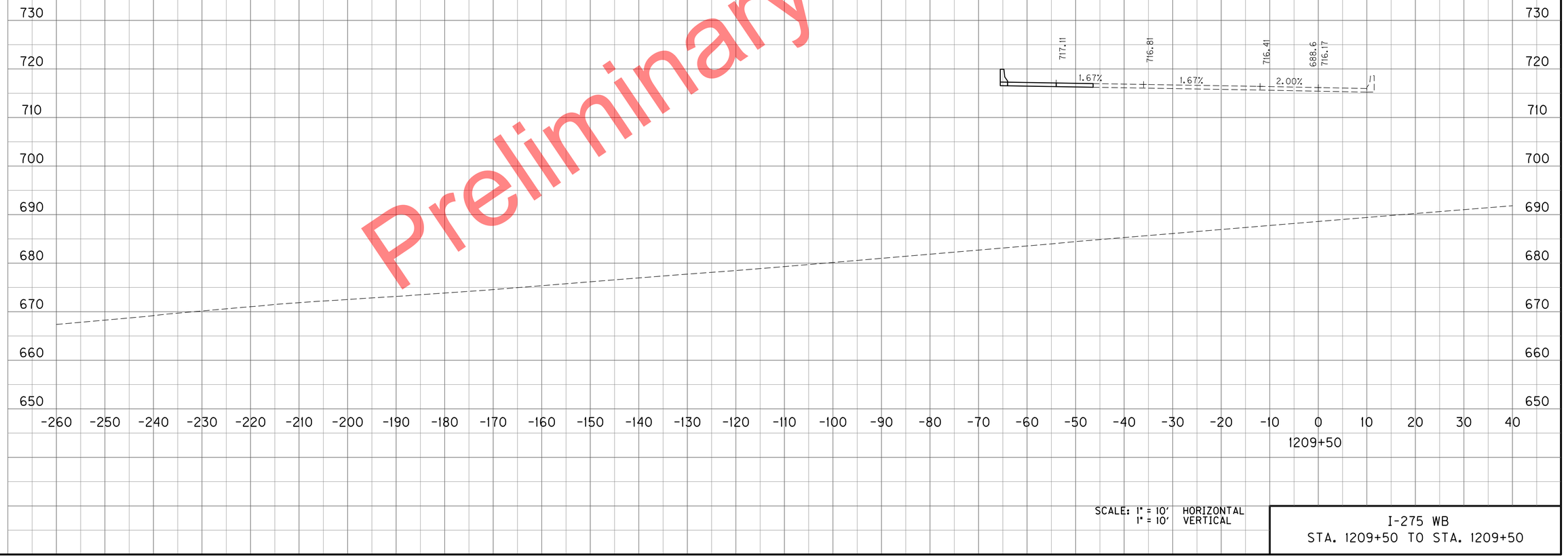

SCALE: 1" = 10' HORIZONTAL
1" = 10' VERTICAL

I-275 WB
STA. 1209+50 TO STA. 1209+50

MicroStation v8.11.7.443
E-SHEET NAME:
USER: tvonbehren
DATE PLOTTED: January 2, 2012
FILE NAME: P:\CIVIL\147\6-2021.00\CONTRACT PLANS AND PROPOSAL\CONTRACT PLAN SET\ROADWAY\CROSS SECTIONS.DGN

COUNTY OF	ITEM NO.	SHEET NO.
CAMPBELL	6-2021.00	X47

EMB	COM	ROCK	EMB BENCH	SURF DITCH

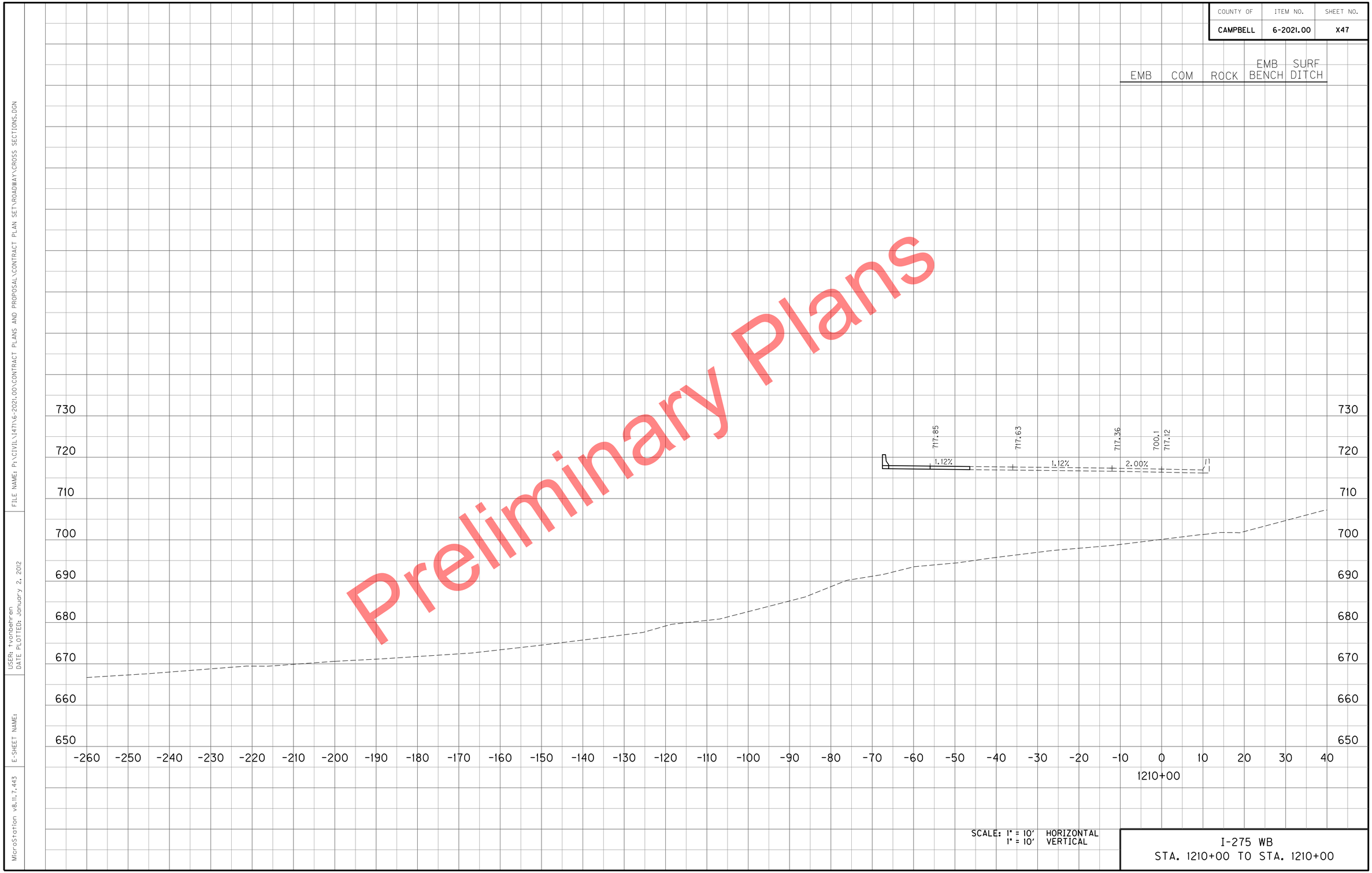

Preliminary Plans

SCALE: 1" = 10' HORIZONTAL
1" = 10' VERTICAL

I-275 WB
STA. 1210+00 TO STA. 1210+00

FILE NAME: P:\CIVIL\147IN\6-2021.00\CONTRACT PLANS AND PROPOSAL\CONTRACT PLAN SET\ROADWAY\CROSS SECTIONS.DGN
USER: tvonbehren
DATE PLOTTED: January 2, 2012
E-SHEET NAME:
MicroStation v8.11.7.443

COUNTY OF	ITEM NO.	SHEET NO.
CAMPBELL	6-2021.00	X48

EMB	COM	ROCK	EMB BENCH	SURF DITCH
2070	6		655	17

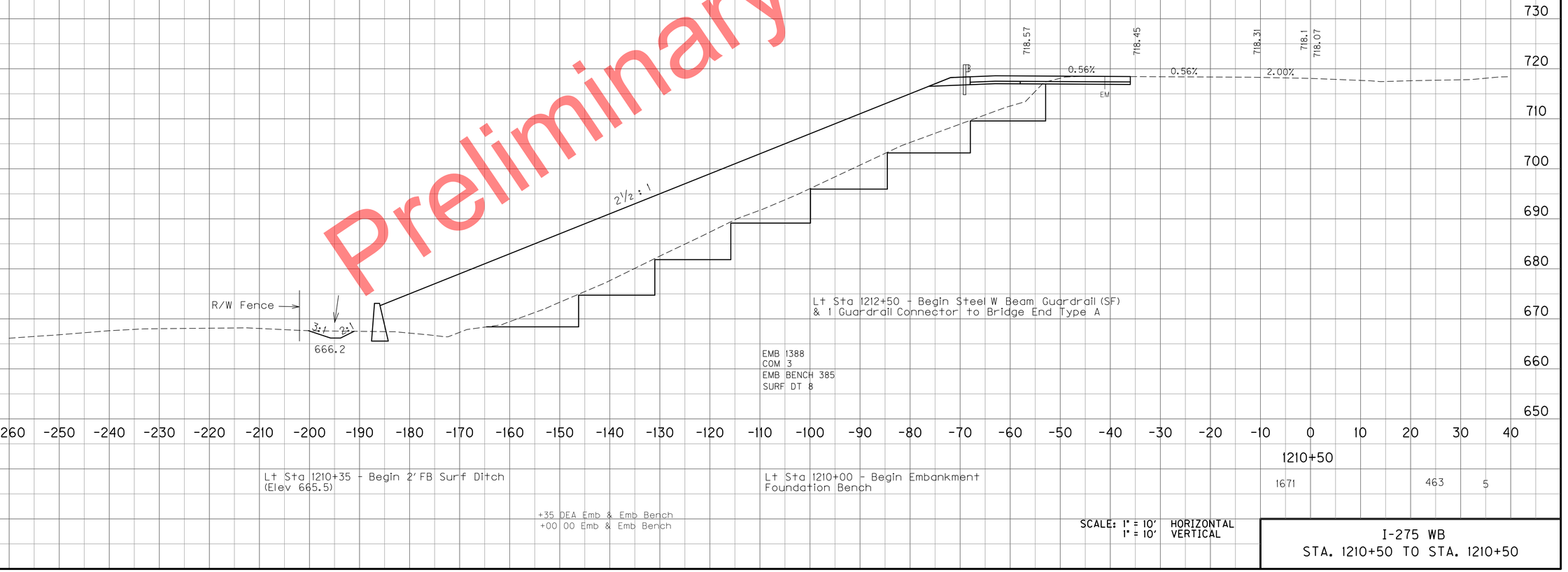

1671			463	5

SCALE: 1" = 10' HORIZONTAL
1" = 10' VERTICAL

I-275 WB
STA. 1210+50 TO STA. 1210+50

Preliminary

MicroStation v8.11.7.443
E-SHEET NAME:
USER: tvonbehren
DATE PLOTTED: January 2, 2012
FILE NAME: P:\CIVIL\147IN\6-2021.00\CONTRACT PLANS AND PROPOSAL\CONTRACT PLAN SET\ROADWAY\CROSS SECTIONS.DGN

COUNTY OF	ITEM NO.	SHEET NO.
CAMPBELL	6-2021.00	X49

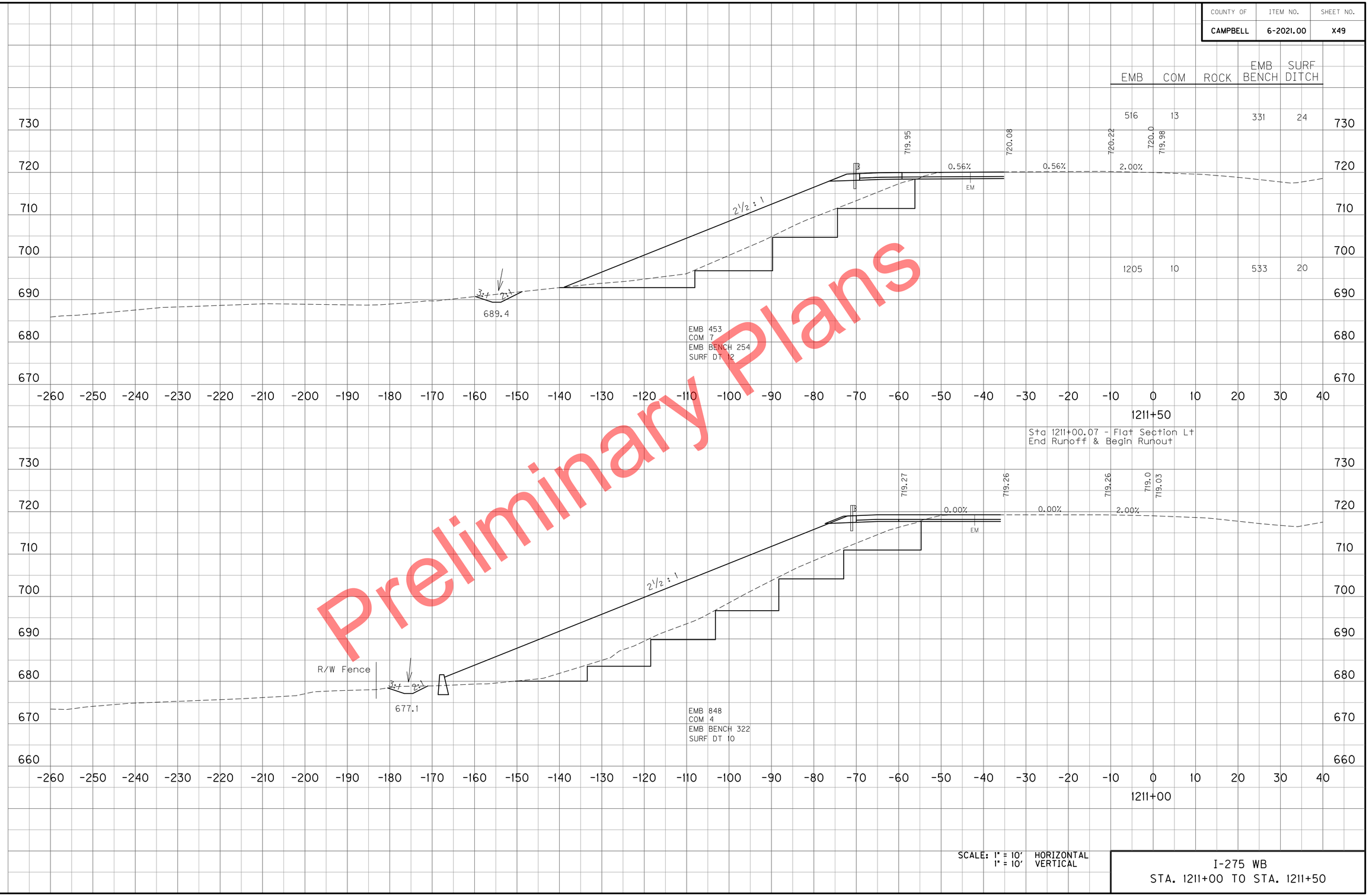

Preliminary Plans

SCALE: 1" = 10' HORIZONTAL
1" = 10' VERTICAL

I-275 WB
STA. 1211+00 TO STA. 1211+50

FILE NAME: P:\CIVIL\147N6-2021.00\CONTRACT PLANS AND PROPOSAL\CONTRACT PLAN SET\ROADWAY\CROSS SECTIONS.DGN
USER: tvonbehren
DATE PLOTTED: January 2, 2012
E-SHEET NAME:
MicroStation v8.11.7.443

COUNTY OF	ITEM NO.	SHEET NO.
CAMPBELL	6-2021.00	X50

EMB	COM	ROCK	EMB BENCH	SURF DITCH
114	13		96	19

Preliminary Plans

Lt Sta 1212+25 - End Embankment
Foundation Bench

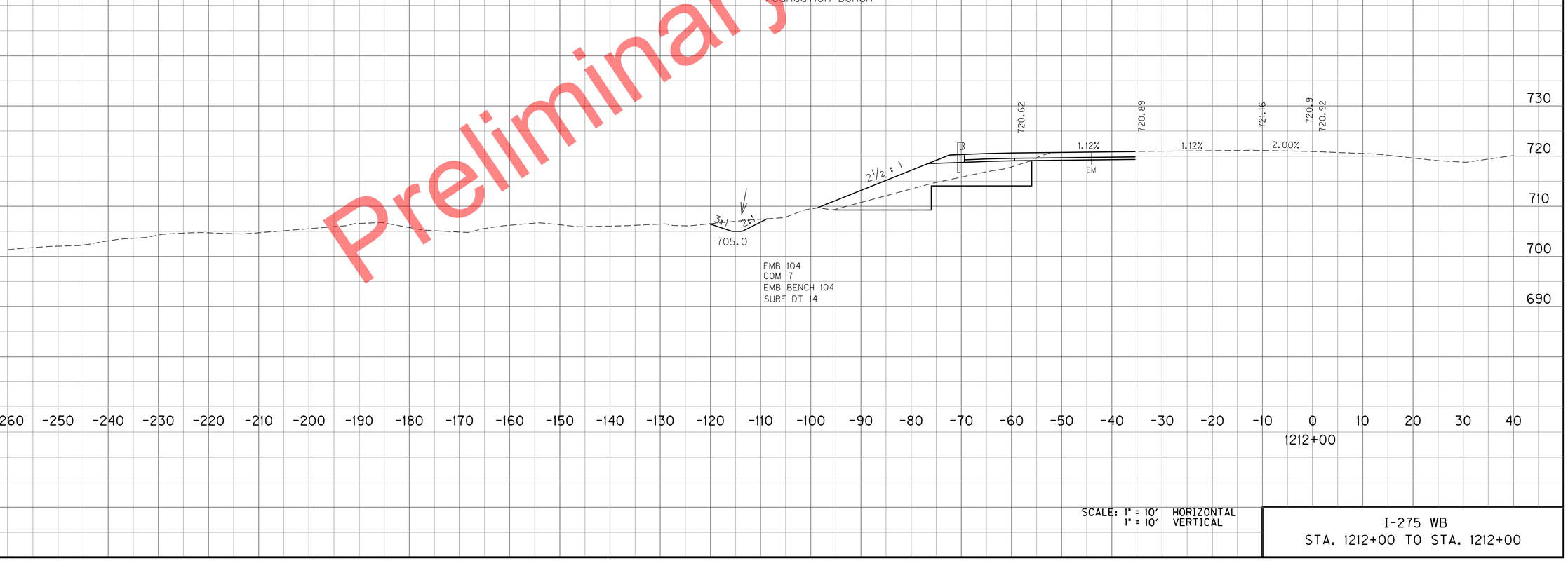

SCALE: 1" = 10' HORIZONTAL
1" = 10' VERTICAL

I-275 WB
STA. 1212+00 TO STA. 1212+00

FILE NAME: P:\CIVIL\147\6-2021.00\CONTRACT PLANS AND PROPOSAL\CONTRACT PLAN SET\ROADWAY\CROSS SECTIONS.DGN
USER: tvanbehren
DATE PLOTTED: January 2, 2012
E-SHEET NAME:
MicroStation v8.11.7.443

COUNTY OF	ITEM NO.	SHEET NO.
CAMPBELL	6-2021.00	X51

EMB	COM	ROCK	EMB BENCH	SURF DITCH
	558	739		

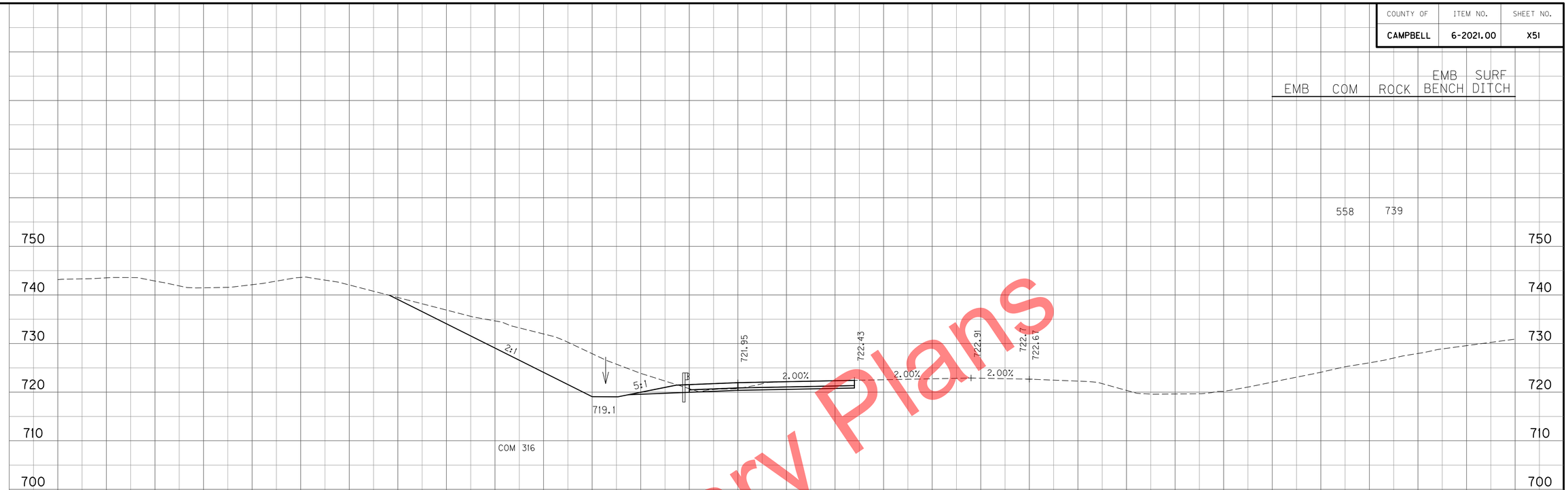

Preliminary Plans

SCALE: 1" = 10' HORIZONTAL
1" = 10' VERTICAL

I-275 WB
STA. 1212+50 TO STA. 1213+00

FILE NAME: P:\CIVIL\147\N6-2021.00\CONTRACT PLANS AND PROPOSAL\CONTRACT PLAN SET\ROADWAY\CROSS SECTIONS.DGN
USER: tvonbehren
DATE PLOTTED: January 2, 2012
E-SHEET NAME:
MicroStation v8.11.7.443

COUNTY OF	ITEM NO.	SHEET NO.
CAMPBELL	6-2021.00	X52

EMB	COM	ROCK	EMB BENCH	SURF DITCH
	627	2200		

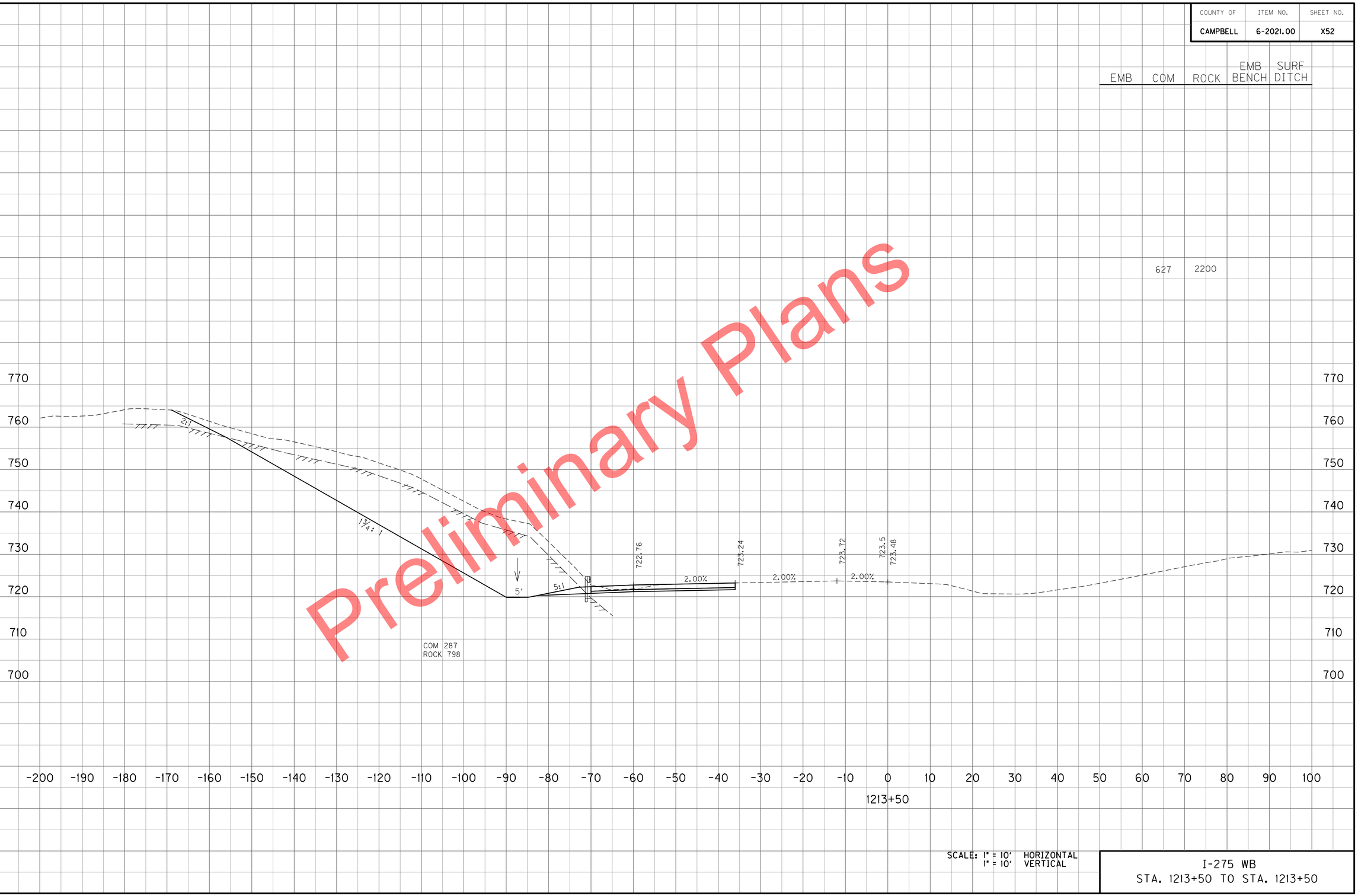

Preliminary Plans

SCALE: 1" = 10' HORIZONTAL
1" = 10' VERTICAL

I-275 WB
STA. 1213+50 TO STA. 1213+50

FILE NAME: P:\CIVIL\147\N6-2021.00\CONTRACT PLANS AND PROPOSAL\CONTRACT PLAN SET\ROADWAY\CROSS SECTIONS.DGN
USER: tvonbehren
DATE PLOTTED: January 2, 2012
E-SHEET NAME:
MicroStation v8.11.7.443

COUNTY OF	ITEM NO.	SHEET NO.
CAMPBELL	6-2021.00	X53

EMB	COM	ROCK	EMB BENCH	SURF DITCH
	759	3744		

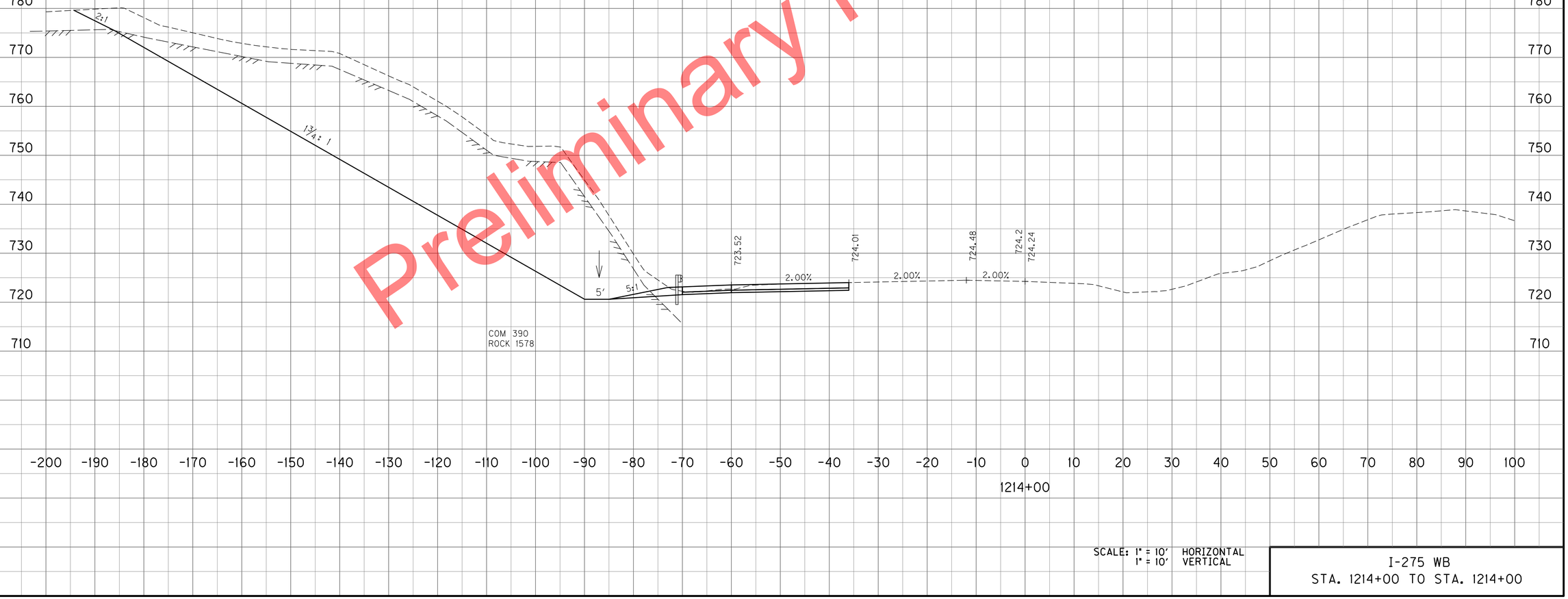

Preliminary Plans

SCALE: 1" = 10' HORIZONTAL
1" = 10' VERTICAL

I-275 WB
STA. 1214+00 TO STA. 1214+00

FILE NAME: P:\CIVIL\147IN\6-2021.00\CONTRACT PLANS AND PROPOSAL\CONTRACT PLAN SET\ROADWAY\CROSS SECTIONS.DGN
USER: tvonbehren
DATE PLOTTED: January 2, 2012
E-SHEET NAME:
MicroStation v8.11.7.443

COUNTY OF	ITEM NO.	SHEET NO.
CAMPBELL	6-2021.00	X54

EMB	COM	ROCK	EMB BENCH	SURF DITCH
	844	5382		

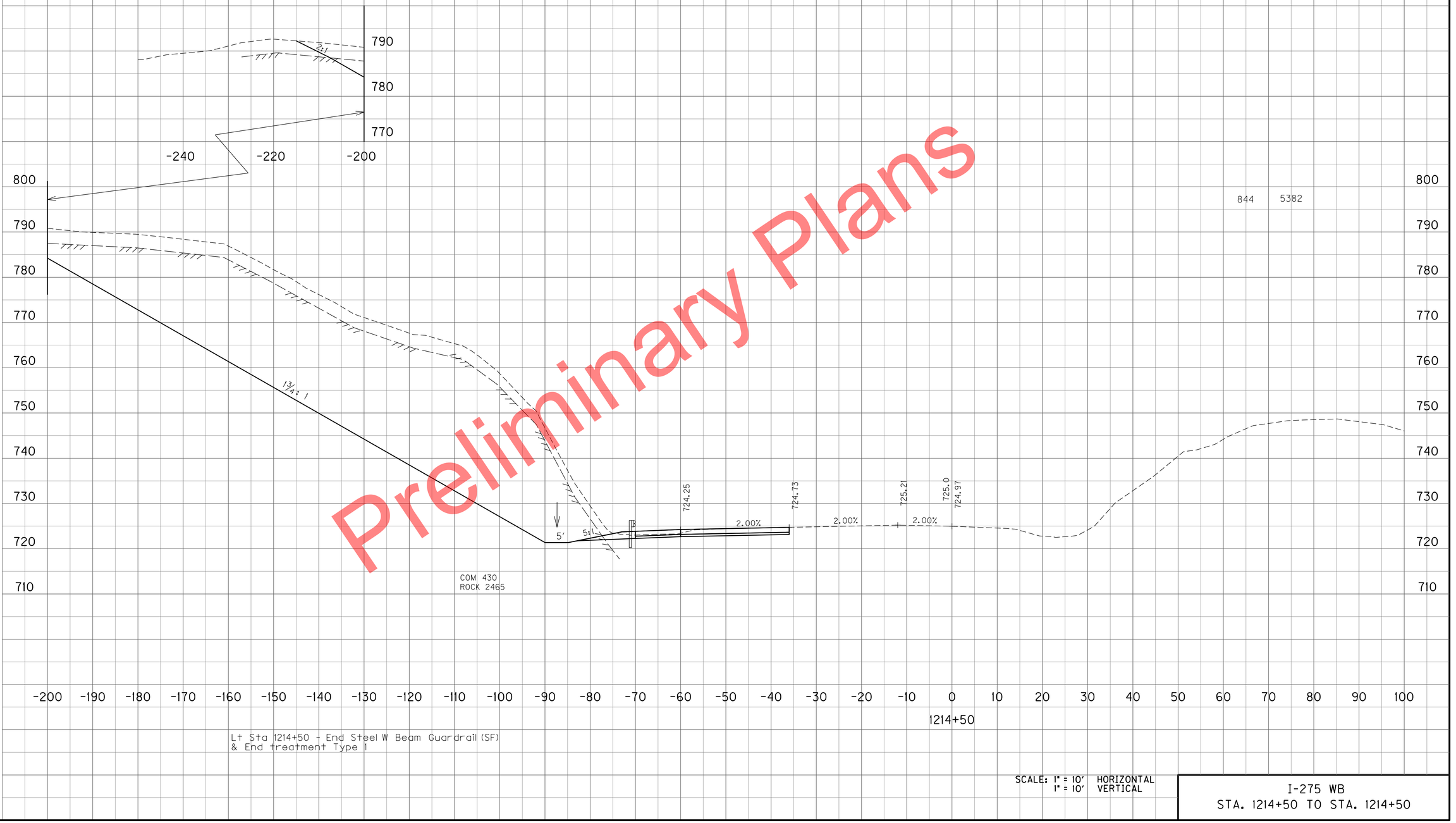

Preliminary Plans

Lt Sta 1214+50 - End Steel W Beam Guardrail (SF)
& End treatment Type I

SCALE: 1" = 10' HORIZONTAL
1" = 10' VERTICAL

I-275 WB
STA. 1214+50 TO STA. 1214+50

FILE NAME: P:\CIVIL\147\N6-2021.00\CONTRACT PLANS AND PROPOSAL\CONTRACT PLAN SET\ROADWAY\CROSS SECTIONS.DGN
USER: tvonbehren
DATE PLOTTED: January 2, 2012
E-SHEET NAME:
MicroStation v8.11.7.443

COUNTY OF	ITEM NO.	SHEET NO.
CAMPBELL	6-2021.00	X55

EMB	COM	ROCK	EMB BENCH	SURF DITCH	
	948	6104			810
					800
					790
					780
					770

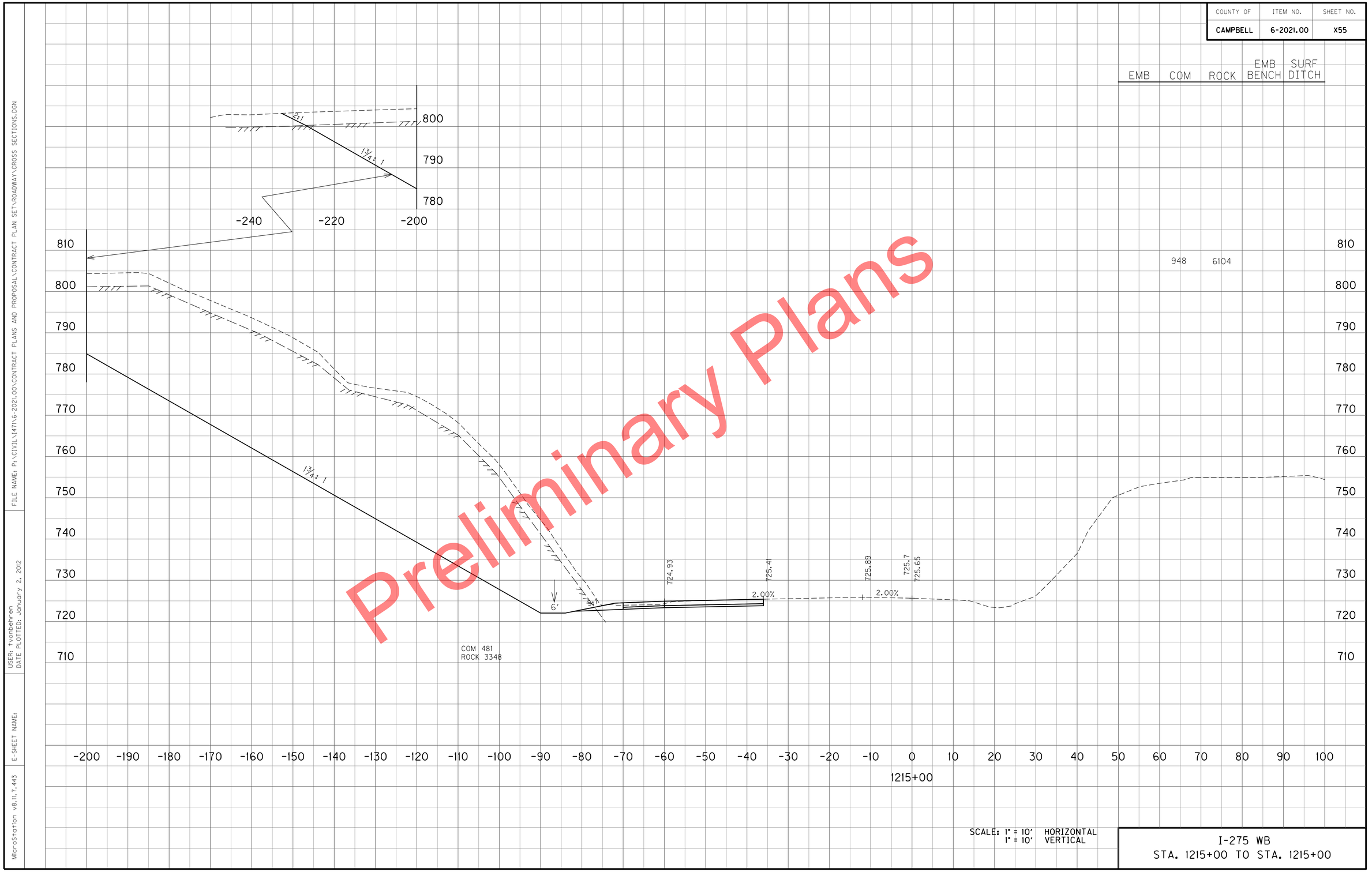

Preliminary Plans

SCALE: 1" = 10' HORIZONTAL
1" = 10' VERTICAL

I-275 WB
STA. 1215+00 TO STA. 1215+00

MicroStation v8.11.7.443
E-SHEET NAME:
USER: tvonbehren
DATE PLOTTED: January 2, 2012
FILE NAME: P:\CIVIL\147\6-2021.00\CONTRACT PLANS AND PROPOSAL\CONTRACT PLAN SET\ROADWAY\CROSS SECTIONS.DGN

COUNTY OF	ITEM NO.	SHEET NO.
CAMPBELL	6-2021.00	X56

EMB	COM	ROCK	EMB BENCH	SURF DITCH
	944	5930		

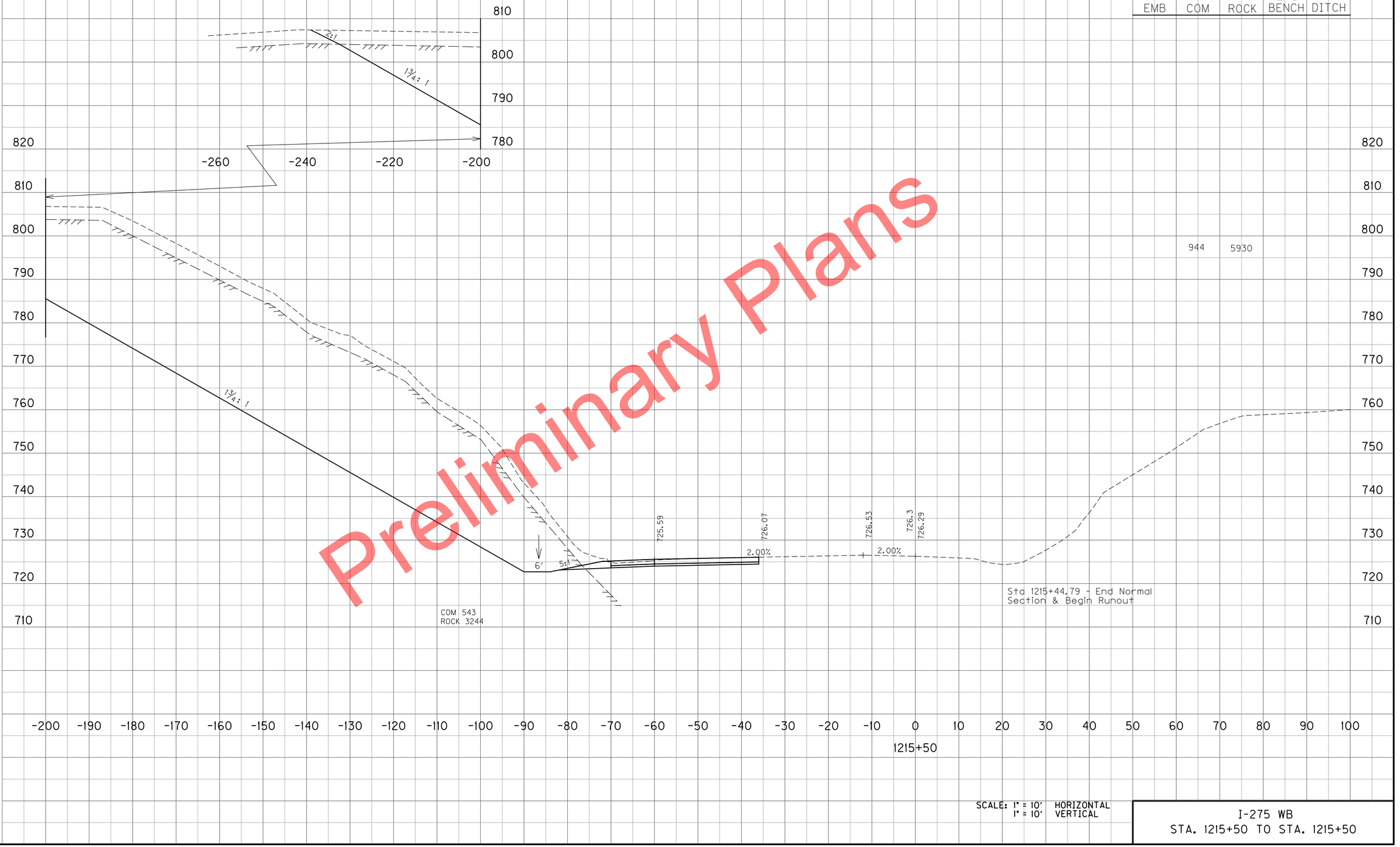

Preliminary Plans

SCALE: 1" = 10' HORIZONTAL
1" = 10' VERTICAL

I-275 WB
STA. 1215+50 TO STA. 1215+50

MicroStation v8.11.7.443
E-SHEET NAME:
USER: tvonbehren
DATE PLOTTED: January 2, 2012
FILE NAME: P:\CIVIL\147IN\6-2021.00\CONTRACT PLANS AND PROPOSAL\CONTRACT PLAN SET\ROADWAY\CROSS SECTIONS.DGN

COUNTY OF	ITEM NO.	SHEET NO.
CAMPBELL	6-2021.00	X57

EMB	COM	ROCK	EMB BENCH	SURF DITCH
	838	5316		

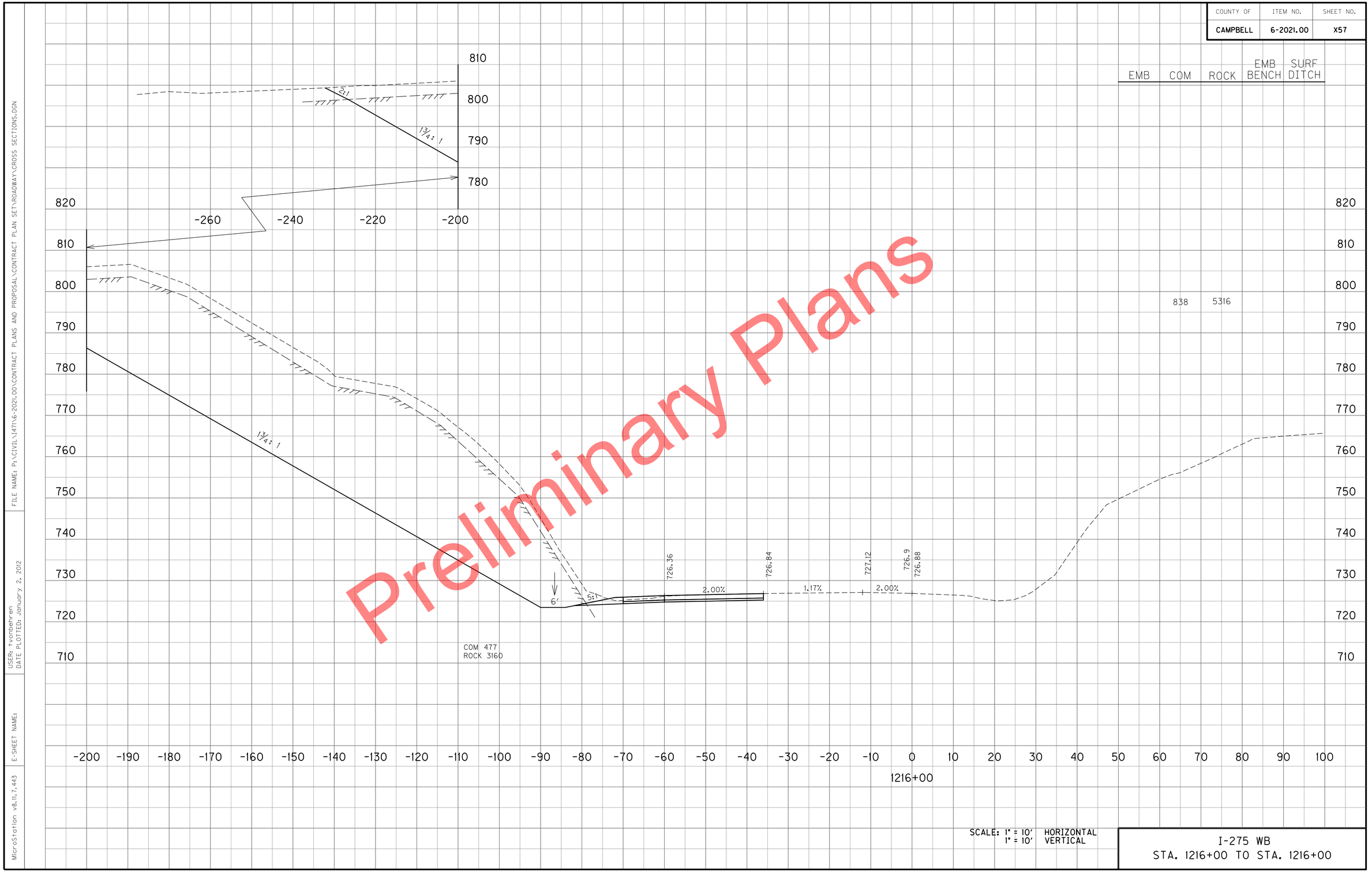

Preliminary Plans

SCALE: 1" = 10' HORIZONTAL
1" = 10' VERTICAL

I-275 WB
STA. 1216+00 TO STA. 1216+00

MicroStation v8.11.7.443
E-SHEET NAME:
USER: tvonbehren
DATE PLOTTED: January 2, 2012
FILE NAME: P:\CIVIL\147IN\6-2021.00\CONTRACT PLANS AND PROPOSAL\CONTRACT PLAN SET\ROADWAY\CROSS SECTIONS.DGN

COUNTY OF	ITEM NO.	SHEET NO.
CAMPBELL	6-2021.00	X58

EMB	COM	ROCK	EMB BENCH	SURF DITCH
	770	4017		

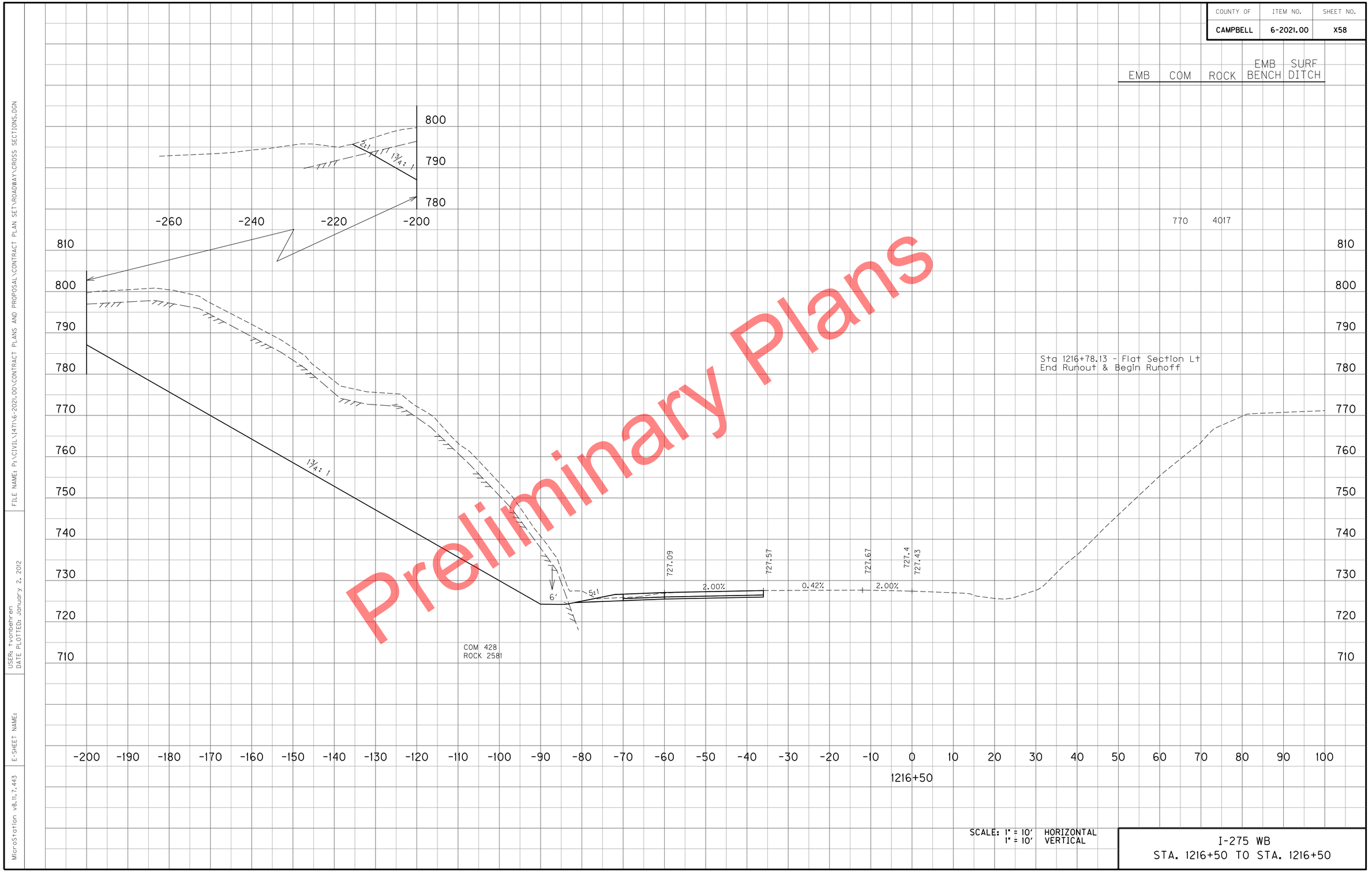

Preliminary Plans

SCALE: 1" = 10' HORIZONTAL
1" = 10' VERTICAL

I-275 WB
STA. 1216+50 TO STA. 1216+50

FILE NAME: P:\CIVIL\147IN6-2021.00\CONTRACT PLANS AND PROPOSAL\CONTRACT PLAN SET\ROADWAY\CROSS SECTIONS.DGN
USER: tvonbehren
DATE PLOTTED: January 2, 2012
E-SHEET NAME:
MicroStation v8.11.7.443

COUNTY OF	ITEM NO.	SHEET NO.
CAMPBELL	6-2021.00	X59

EMB	COM	ROCK	EMB BENCH	SURF DITCH
	697	2478		

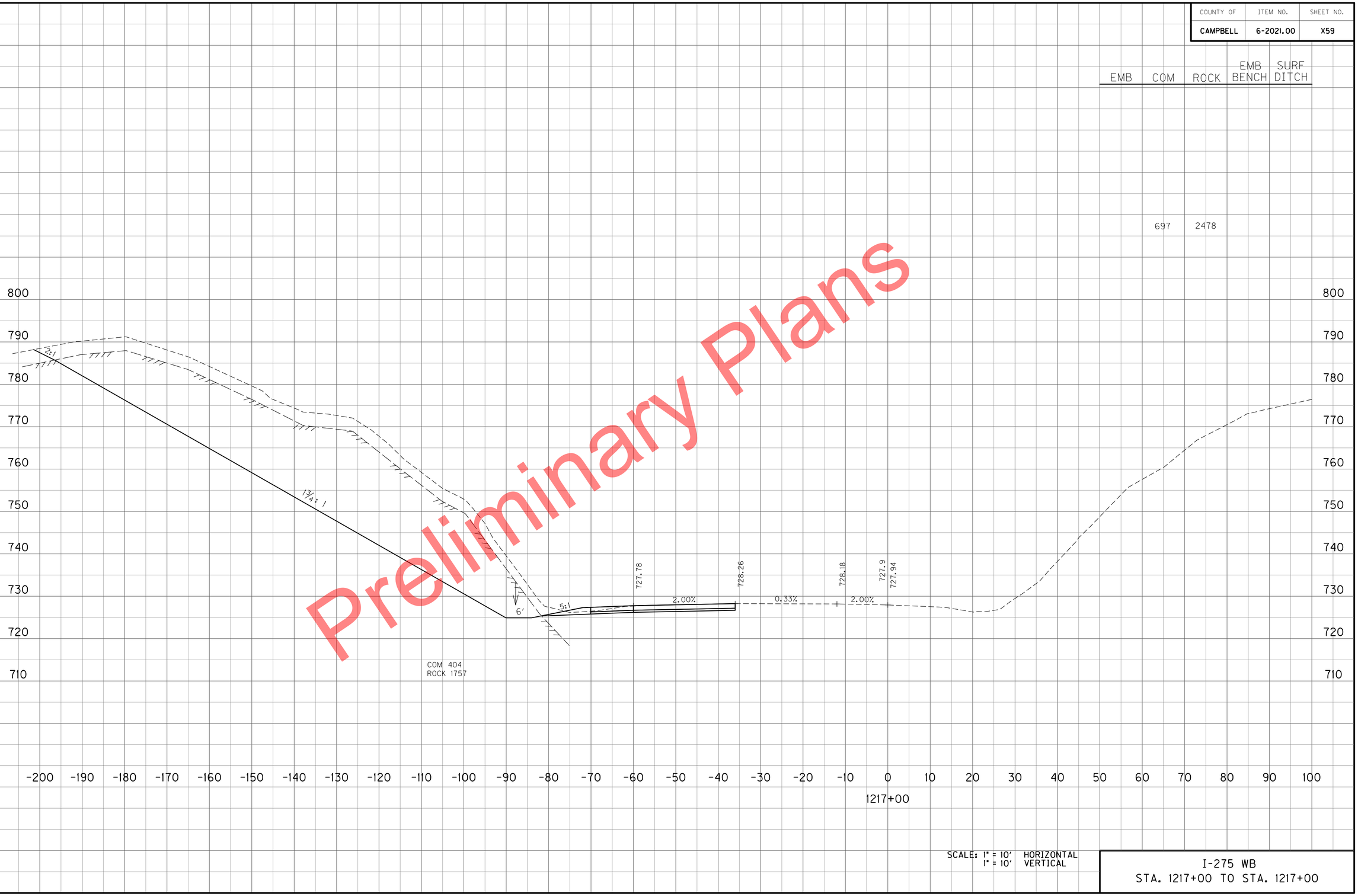

Preliminary Plans

SCALE: 1" = 10' HORIZONTAL
1" = 10' VERTICAL

I-275 WB
STA. 1217+00 TO STA. 1217+00

MicroStation v8.11.7.443
E-SHEET NAME:
USER: tvonbehren
DATE PLOTTED: January 2, 2012
FILE NAME: P:\CIVIL\147\6-2021.00\CONTRACT PLANS AND PROPOSAL\CONTRACT PLAN SET\ROADWAY\CROSS SECTIONS.DGN

COUNTY OF	ITEM NO.	SHEET NO.
CAMPBELL	6-2021.00	X60

EMB	COM	ROCK	EMB BENCH	SURF DITCH
	535	1302		

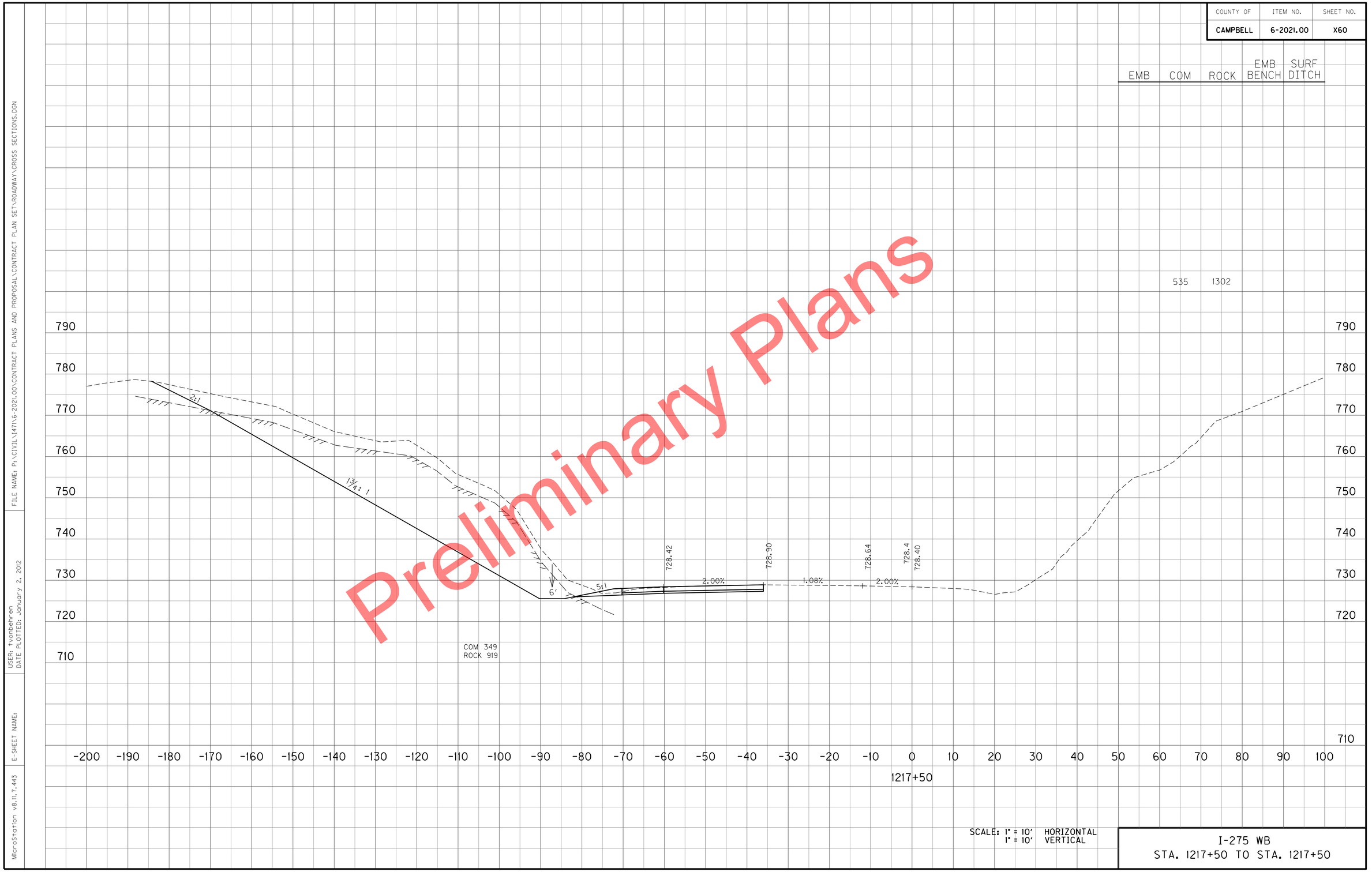

Preliminary Plans

SCALE: 1" = 10' HORIZONTAL
1" = 10' VERTICAL

I-275 WB
STA. 1217+50 TO STA. 1217+50

FILE NAME: P:\CIVIL\147\16-2021.00\CONTRACT PLANS AND PROPOSAL\CONTRACT PLAN SET\ROADWAY\CROSS SECTIONS.DGN
USER: tvonbehren
DATE PLOTTED: January 2, 2012
E-SHEET NAME:
MicroStation v8.11.7.443

COUNTY OF	ITEM NO.	SHEET NO.
CAMPBELL	6-2021.00	X61

EMB	COM	ROCK	EMB BENCH	SURF DITCH
	320	507		

Sta 1218+11.46 - Reverse Crown

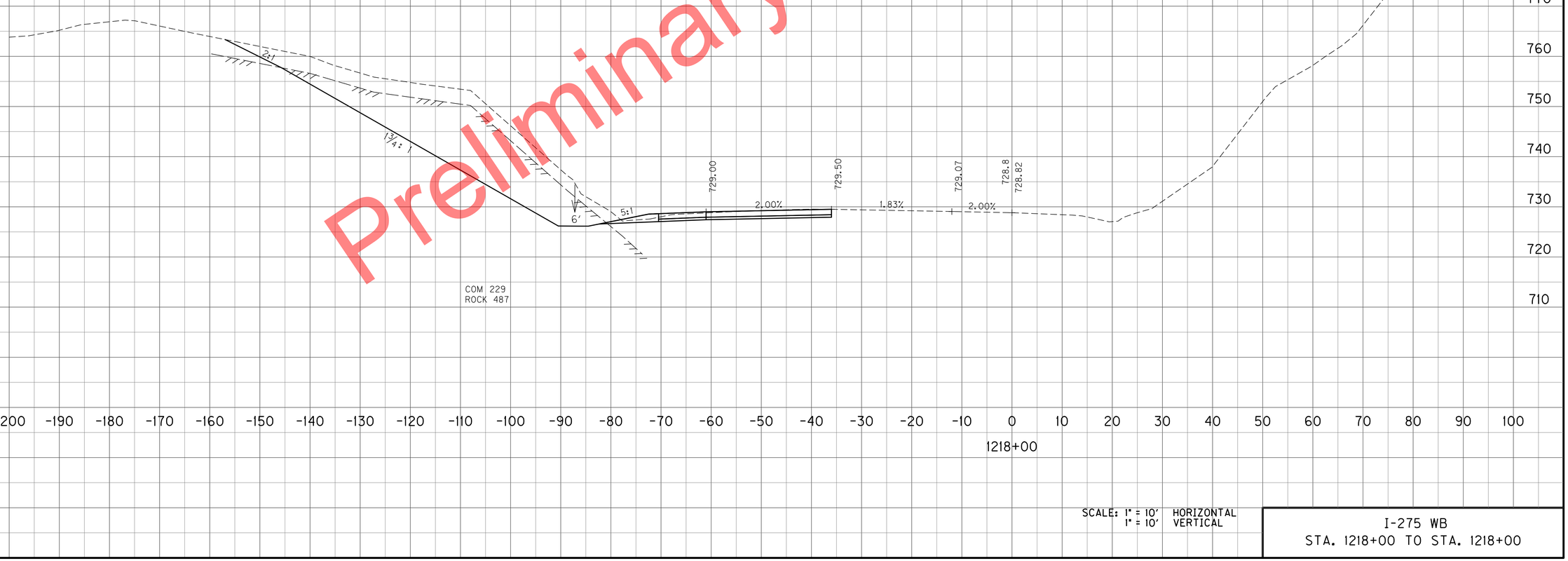

Preliminary Plans

SCALE: 1" = 10' HORIZONTAL
1" = 10' VERTICAL

I-275 WB
STA. 1218+00 TO STA. 1218+00

MicroStation v8.11.7.443
E-SHEET NAME:
USER: tvonbehren
DATE PLOTTED: January 2, 2012
FILE NAME: P:\CIVIL\147IN\6-2021.00\CONTRACT PLANS AND PROPOSAL\CONTRACT PLAN SET\ROADWAY\CROSS SECTIONS.DGN

COUNTY OF	ITEM NO.	SHEET NO.
CAMPBELL	6-2021.00	X62

	EMB	COM	ROCK	EMB BENCH	SURF DITCH
TOTALS : I-275 WB STA 1197+60 TO STA 1219+98.10	14814	8423	37747	9100	80

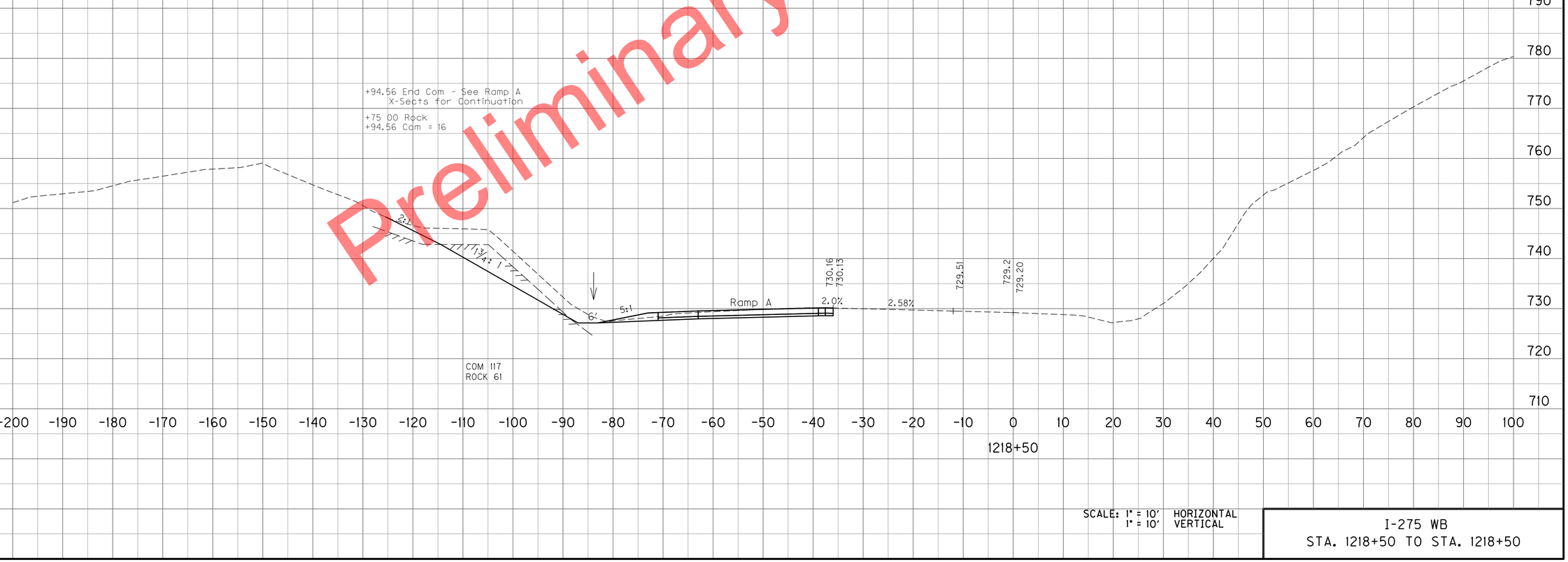

Preliminary Plans

SCALE: 1" = 10' HORIZONTAL
1" = 10' VERTICAL

I-275 WB
STA. 1218+50 TO STA. 1218+50

MicroStation v8.11.7.443
E-SHEET NAME:
USER: tvonbehren
DATE PLOTTED: January 2, 2012
FILE NAME: P:\CIVIL\147\N6-2021.00\CONTRACT PLANS AND PROPOSAL\CONTRACT PLAN SET\ROADWAY\CROSS SECTIONS.DGN

COUNTY OF	ITEM NO.	SHEET NO.
CAMPBELL	6-2021.00	X63

Preliminary Plans



SCALE: 1" = 10' HORIZONTAL
1" = 10' VERTICAL

I-275 WB
STA. 1219+00 TO STA. 1219+00

FILE NAME: P:\CIVIL\147\N6-2021.00\CONTRACT PLANS AND PROPOSAL\CONTRACT PLAN SET\ROADWAY\CROSS SECTIONS.DGN
USER: tvonbehren
DATE PLOTTED: January 2, 2012
E-SHEET NAME:
MicroStation v8.11.7.443

COUNTY OF	ITEM NO.	SHEET NO.
CAMPBELL	6-2021.00	X64



Preliminary Plans

SCALE: 1" = 10' HORIZONTAL
1" = 10' VERTICAL

I-275 WB
STA. 1219+50 TO STA. 1219+50

FILE NAME: P:\CIVIL\147\N6-2021.00\CONTRACT PLANS AND PROPOSAL\CONTRACT PLAN SET\ROADWAY\CROSS SECTIONS.DGN
USER: tvonbehren
DATE PLOTTED: January 2, 2012
E-SHEET NAME:
MicroStation v8.11.7.443

COUNTY OF	ITEM NO.	SHEET NO.
CAMPBELL	6-2021.00	X65

Preliminary Plans

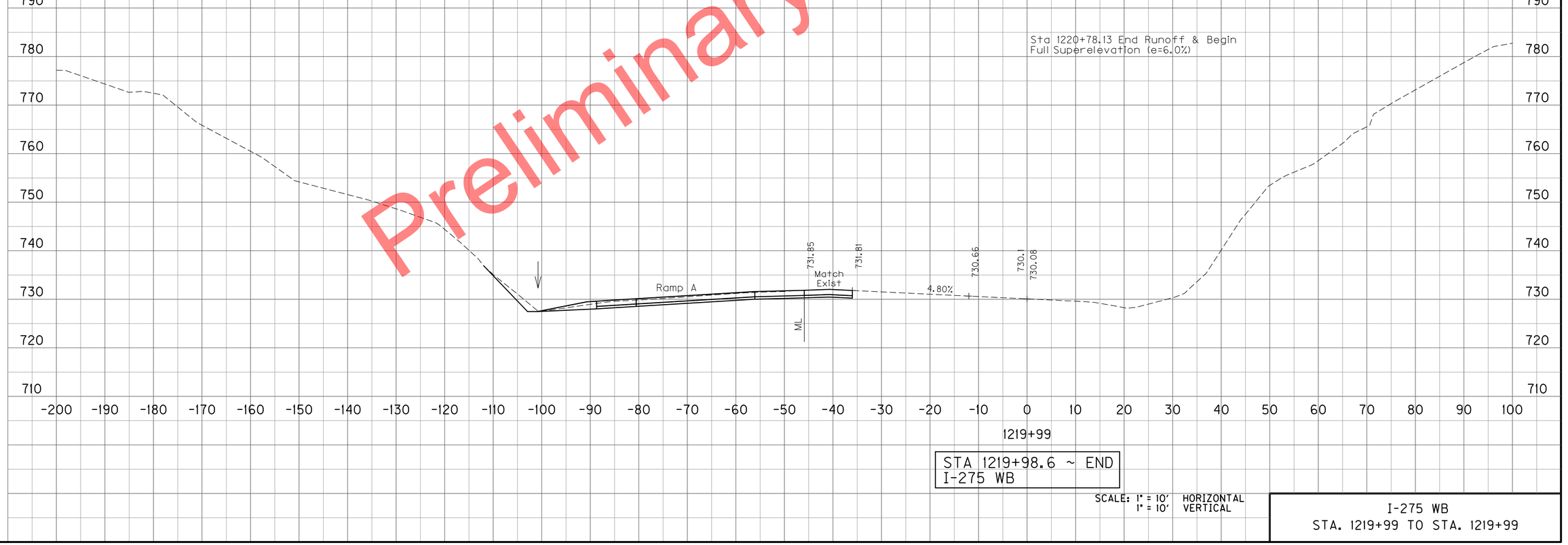

STA 1219+98.6 ~ END
I-275 WB

SCALE: 1" = 10' HORIZONTAL
1" = 10' VERTICAL

I-275 WB
STA. 1219+99 TO STA. 1219+99

FILE NAME: P:\CIVIL\147\N6-2021.00\CONTRACT PLANS AND PROPOSAL\CONTRACT PLAN SET\ROADWAY\CROSS SECTIONS.DGN
USER: tvonbehren
DATE PLOTTED: January 2, 2012
E-SHEET NAME:
MicroStation v8.11.7.443

COUNTY OF	ITEM NO.	SHEET NO.
CAMPBELL	6-2021.00	X66

EMB COM ROCK

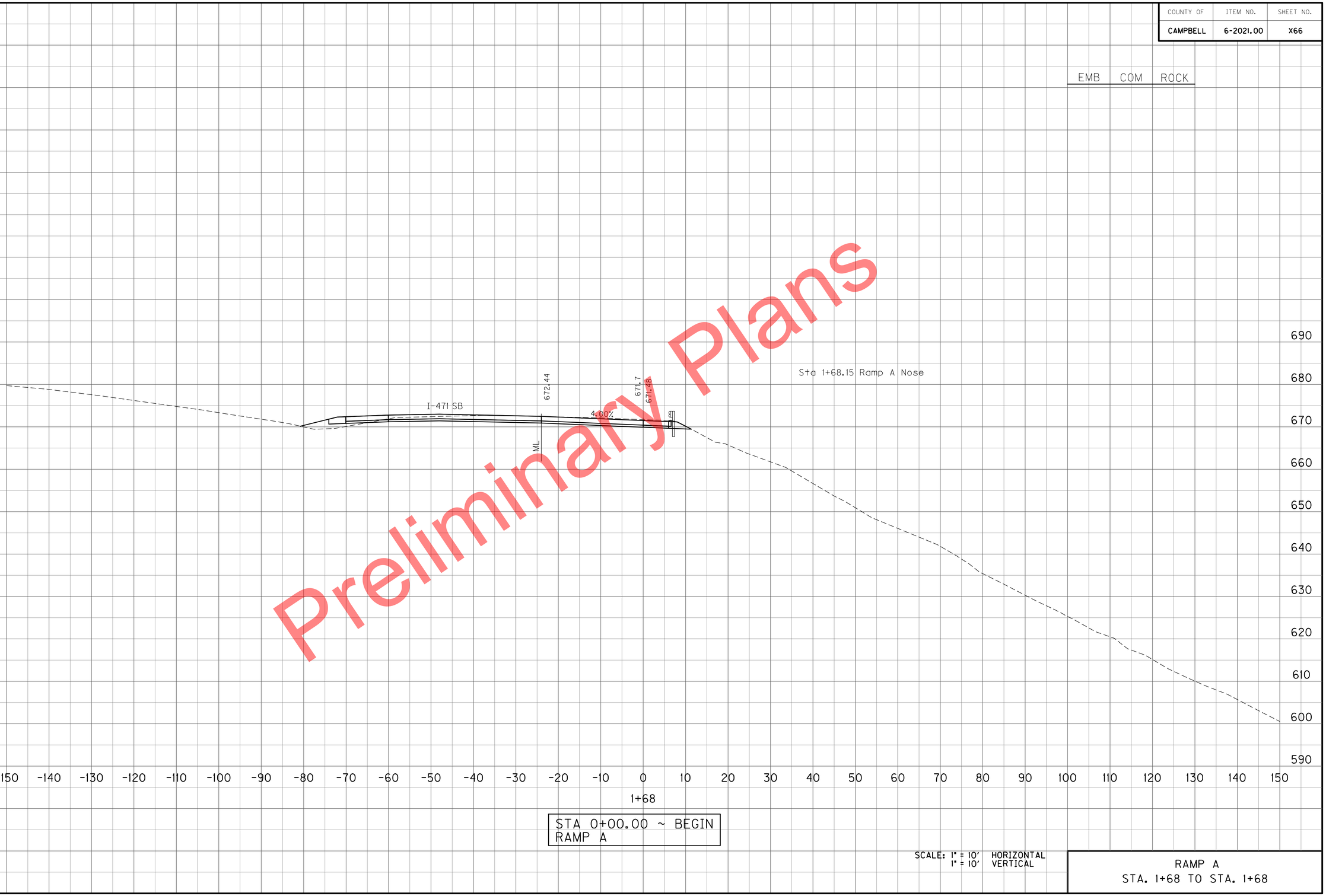

STA 0+00.00 ~ BEGIN RAMP A

SCALE: 1" = 10' HORIZONTAL
1" = 10' VERTICAL

RAMP A
STA. 1+68 TO STA. 1+68

Preliminary Plans

FILE NAME: P:\CIVIL\147\N6-2021.00\CONTRACT PLANS AND PROPOSAL\CONTRACT PLAN SET\ROADWAY\CROSS SECTIONS.DGN
USER: tvonbehren
DATE PLOTTED: January 2, 2012
E-SHEET NAME:
MicroStation v8.11.7.443

COUNTY OF	ITEM NO.	SHEET NO.
CAMPBELL	6-2021.00	X67

EMB COM ROCK

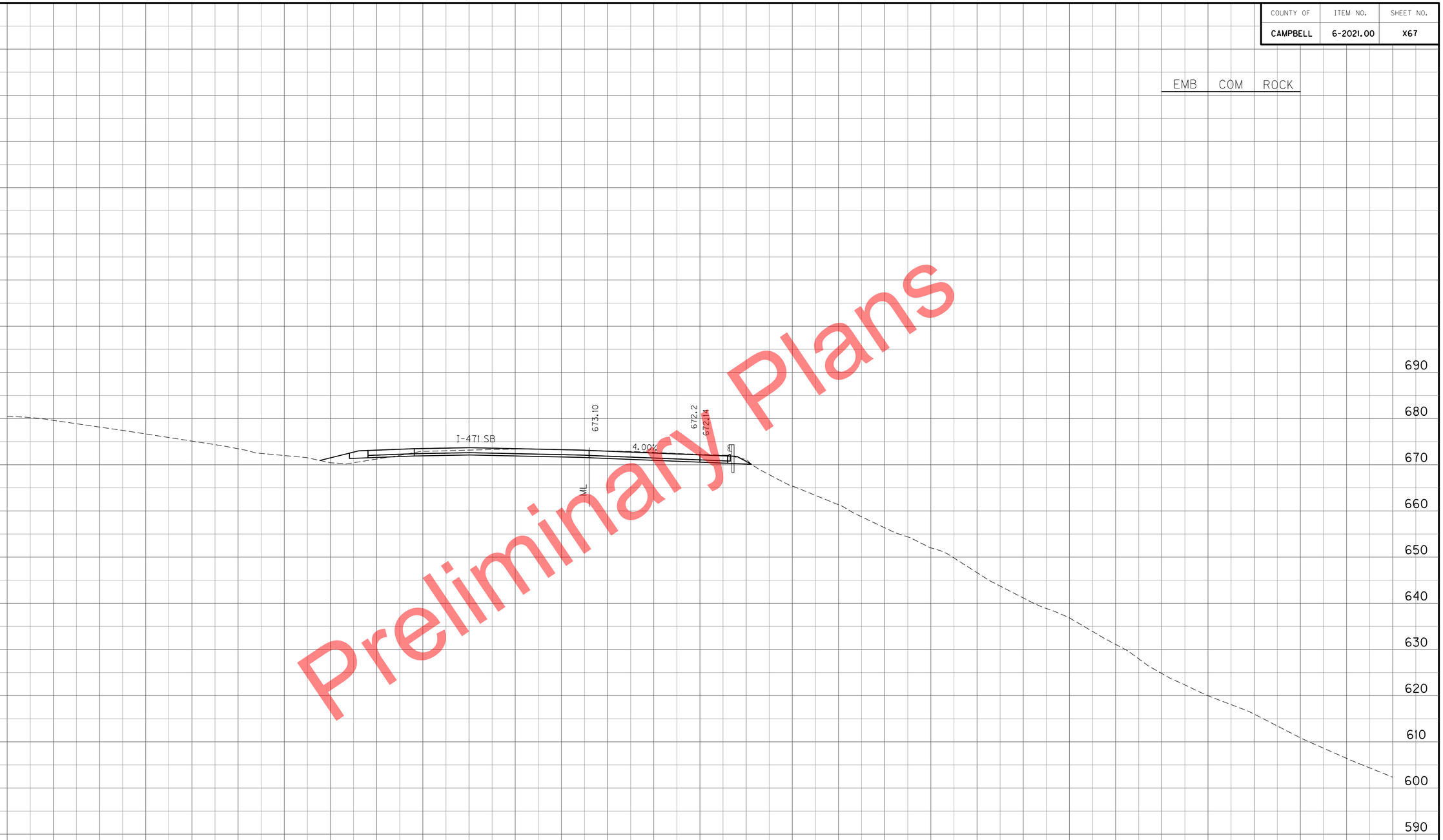

Preliminary Plans

SCALE: 1" = 10' HORIZONTAL
1" = 10' VERTICAL

RAMP A
STA. 2+00 TO STA. 2+00

FILE NAME: P:\CIVIL\147N\6-2021.00\CONTRACT PLANS AND PROPOSAL\CONTRACT PLAN SET\ROADWAY\CROSS SECTIONS.DGN
USER: tvonbehren
DATE PLOTTED: January 2, 2012
E-SHEET NAME:
MicroStation v8.11.7.443

COUNTY OF	ITEM NO.	SHEET NO.
CAMPBELL	6-2021.00	X68

EMB COM ROCK

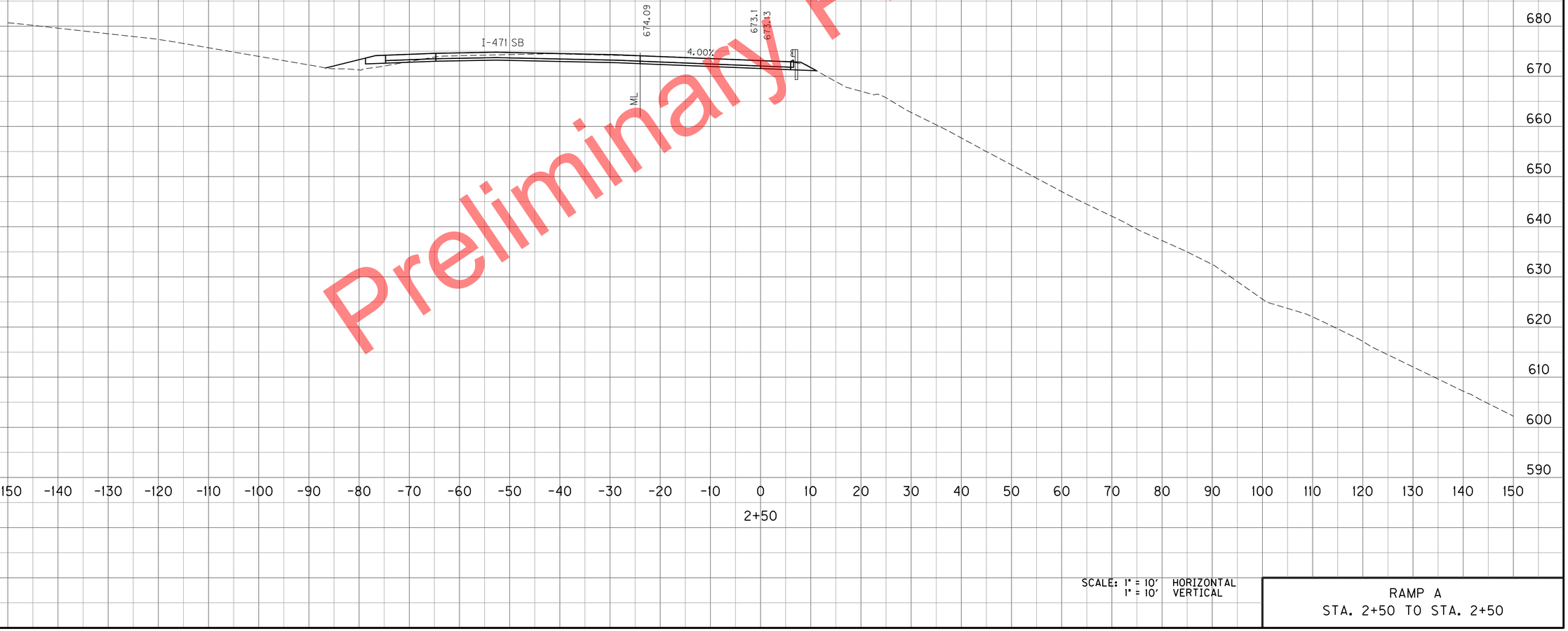

Preliminary Plans

SCALE: 1" = 10' HORIZONTAL
1" = 10' VERTICAL

RAMP A
STA. 2+50 TO STA. 2+50

MicroStation v8.11.7.443
E-SHEET NAME:
USER: tvonbehren
DATE PLOTTED: January 2, 2012
FILE NAME: P:\CIVIL\147IN6-2021.00\CONTRACT PLANS AND PROPOSAL\CONTRACT PLAN SET\ROADWAY\CROSS SECTIONS.DGN

COUNTY OF	ITEM NO.	SHEET NO.
CAMPBELL	6-2021.00	X69

EMB COM ROCK



Preliminary Plans

SCALE: 1" = 10' HORIZONTAL
1" = 10' VERTICAL

RAMP A
STA. 3+00 TO STA. 3+00

FILE NAME: P:\CIVIL\147IN6-2021.00\CONTRACT PLANS AND PROPOSAL\CONTRACT PLAN SET\ROADWAY\CROSS SECTIONS.DGN
USER: tvonbehren
DATE PLOTTED: January 2, 2012
E-SHEET NAME:
MicroStation v8.11.7.443

COUNTY OF	ITEM NO.	SHEET NO.
CAMPBELL	6-2021.00	X70

EMB COM ROCK

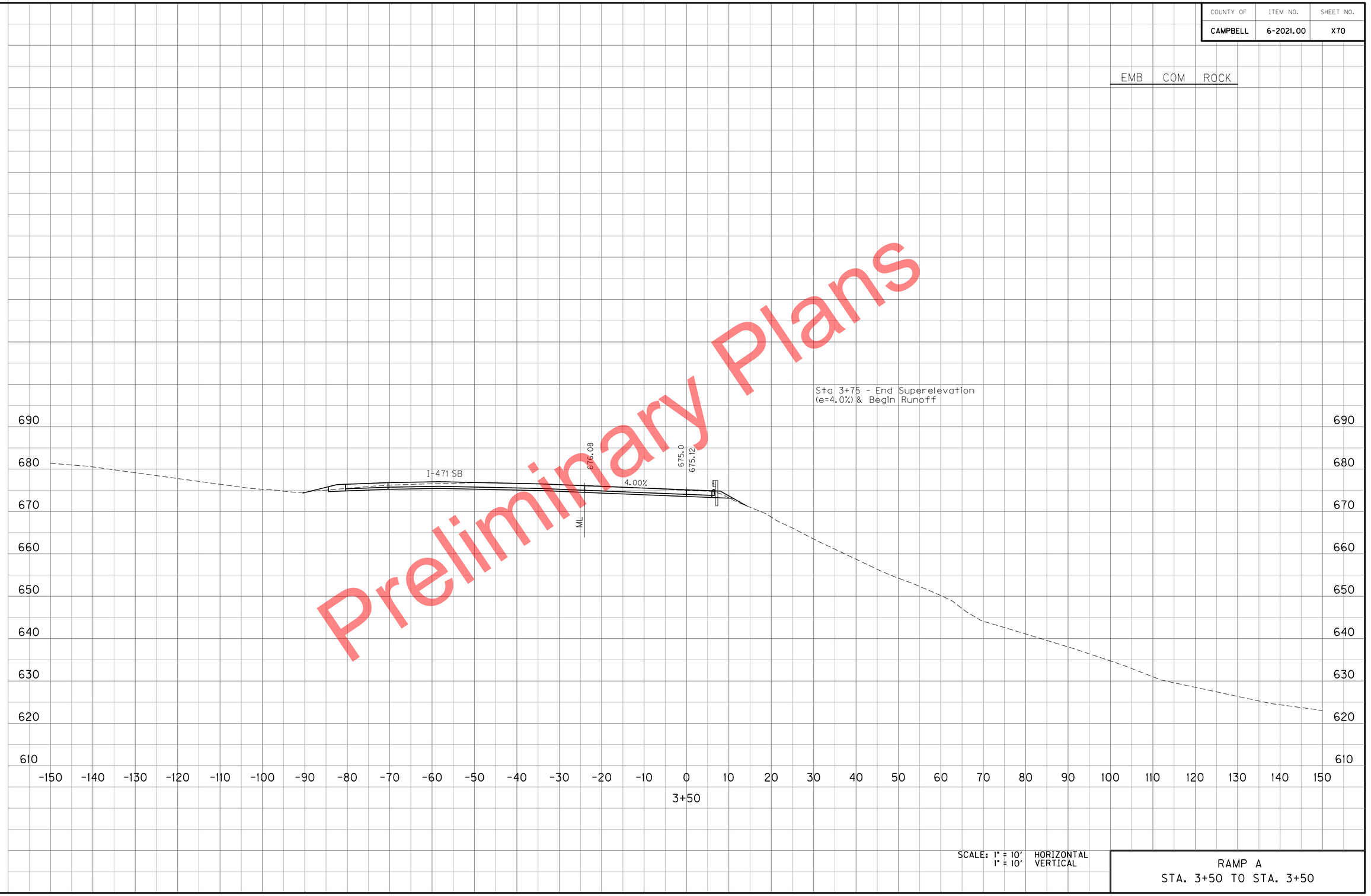

Preliminary Plans

SCALE: 1" = 10' HORIZONTAL
1" = 10' VERTICAL

RAMP A
STA. 3+50 TO STA. 3+50

MicroStation v8.11.7.443
E-SHEET NAME:
USER: tvonbehren
DATE PLOTTED: January 2, 2012
FILE NAME: P:\CIVIL\471\6-2021.00\CONTRACT PLANS AND PROPOSAL\CONTRACT PLAN SET\ROADWAY\CROSS SECTIONS.DGN

COUNTY OF	ITEM NO.	SHEET NO.
CAMPBELL	6-2021.00	X71

EMB COM ROCK

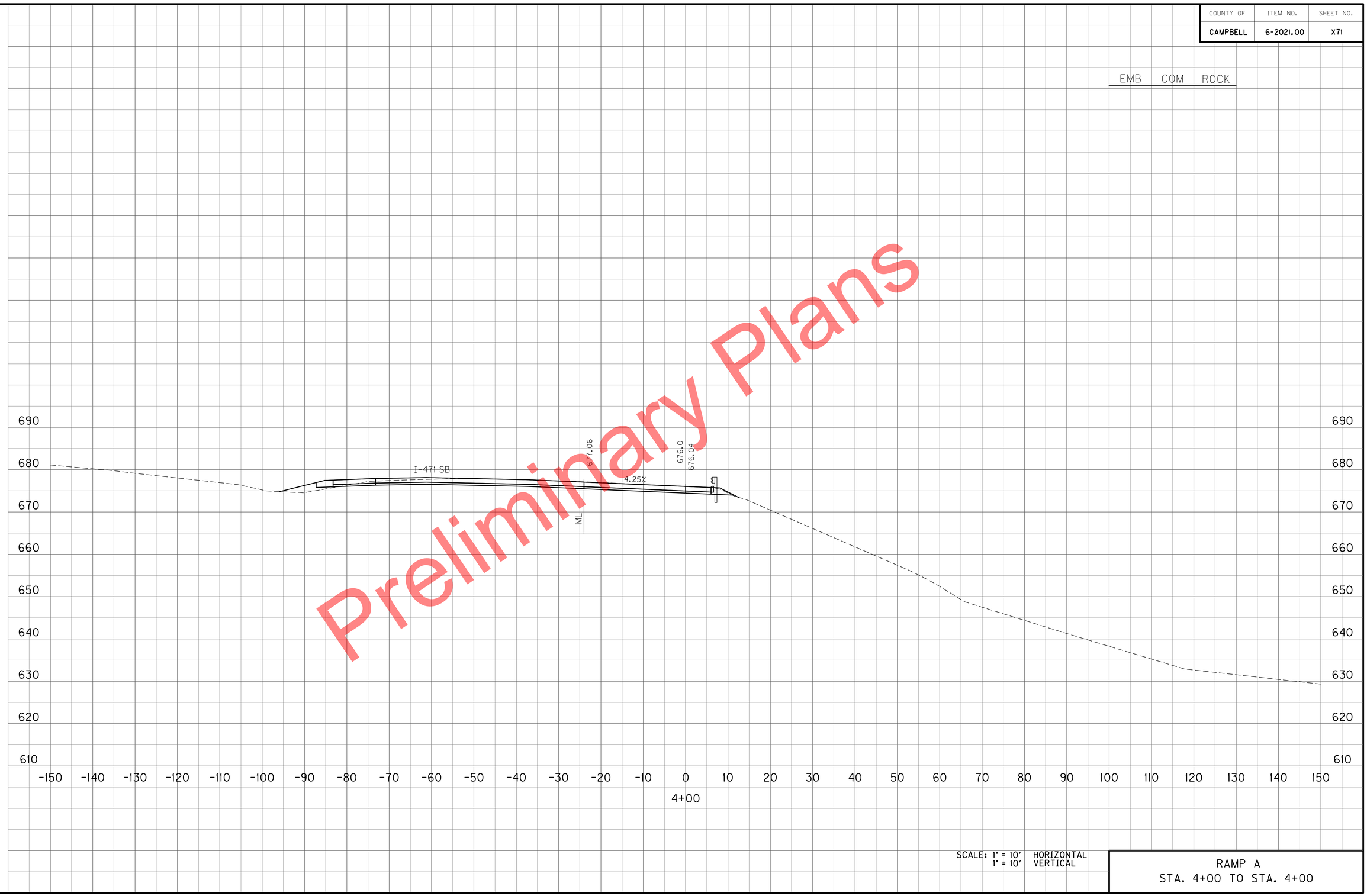

Preliminary Plans

SCALE: 1" = 10' HORIZONTAL
1" = 10' VERTICAL

RAMP A
STA. 4+00 TO STA. 4+00

MicroStation v8.11.7.443
E-SHEET NAME:
USER: tvonbehren
DATE PLOTTED: January 2, 2012
FILE NAME: P:\CIVIL\471\6-2021.00\CONTRACT PLANS AND PROPOSAL\CONTRACT PLAN SET\ROADWAY\CROSS SECTIONS.DGN

COUNTY OF	ITEM NO.	SHEET NO.
CAMPBELL	6-2021.00	X72

EMB COM ROCK

I-471 SB

679.14
678.1
677.88
5.23%
ML
ML
15' BK

678.10
676.9
676.96
4.75%
ML

690 680 670 660 650 640 630 620

-150 -140 -130 -120 -110 -100 -90 -80 -70 -60 -50 -40 -30 -20 -10 0 10 20 30 40 50 60 70 80 90 100 110 120 130 140 150

5+00

4+50

Preliminary Plans

SCALE: 1" = 10' HORIZONTAL
1" = 10' VERTICAL

RAMP A
STA. 4+50 TO STA. 5+00

FILE NAME: P:\CIVIL\471N6-2021.00\CONTRACT PLANS AND PROPOSAL\CONTRACT PLAN SET\ROADWAY\CROSS SECTIONS.DGN
USER: tvonbehren
DATE PLOTTED: January 2, 2012
E-SHEET NAME:
MicroStation v8.11.7.443

COUNTY OF	ITEM NO.	SHEET NO.
CAMPBELL	6-2021.00	X73

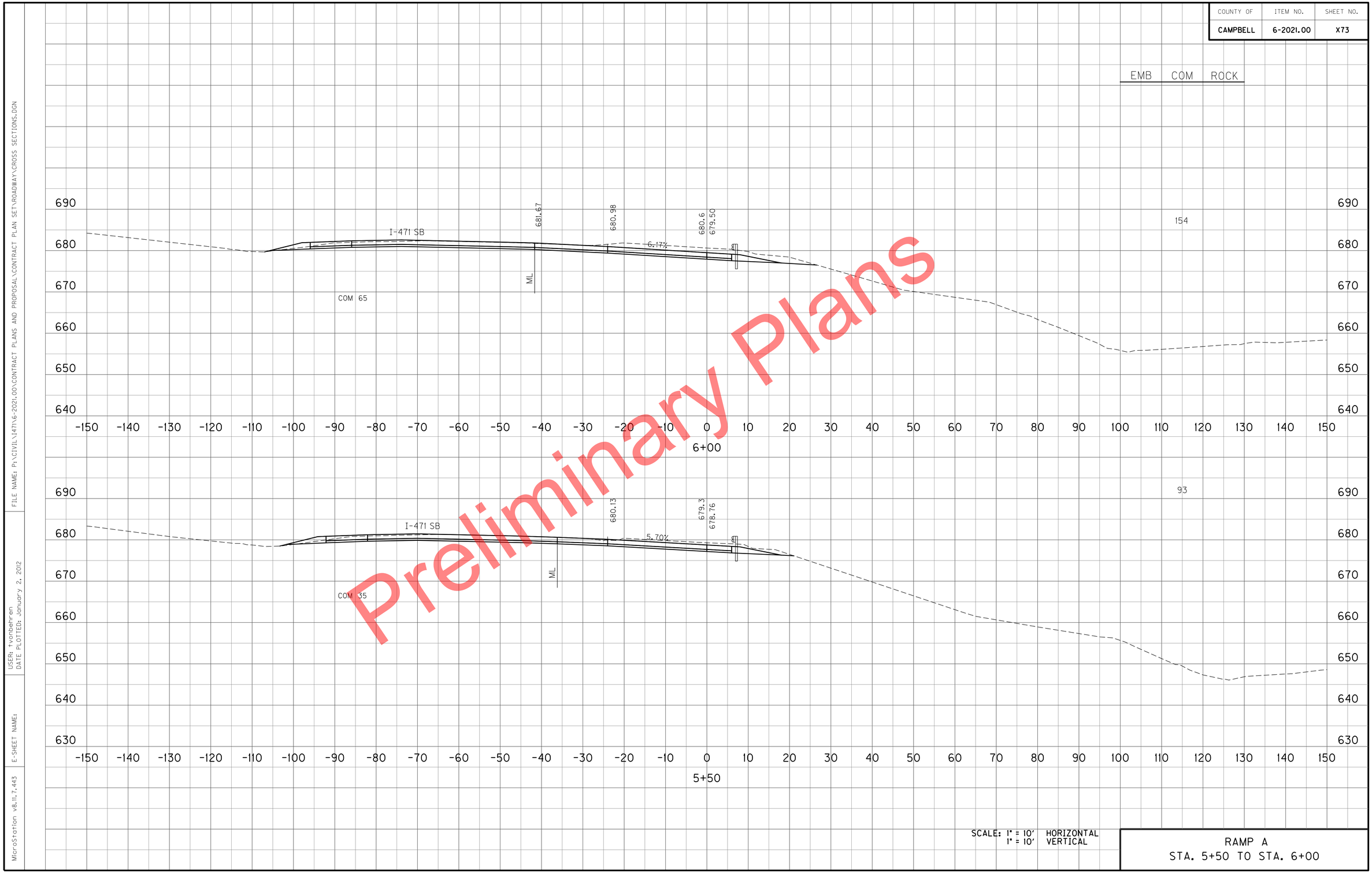

Preliminary Plans

SCALE: 1" = 10' HORIZONTAL
1" = 10' VERTICAL

RAMP A
STA. 5+50 TO STA. 6+00

FILE NAME: P:\CIVIL\471N\6-2021.00\CONTRACT PLANS AND PROPOSAL\CONTRACT PLAN SET\ROADWAY\CROSS SECTIONS.DGN
USER: tvonbehren
DATE PLOTTED: January 2, 2012
E-SHEET NAME:
MicroStation v8.11.7.443

COUNTY OF	ITEM NO.	SHEET NO.
CAMPBELL	6-2021.00	X74

EMB COM ROCK

4 193

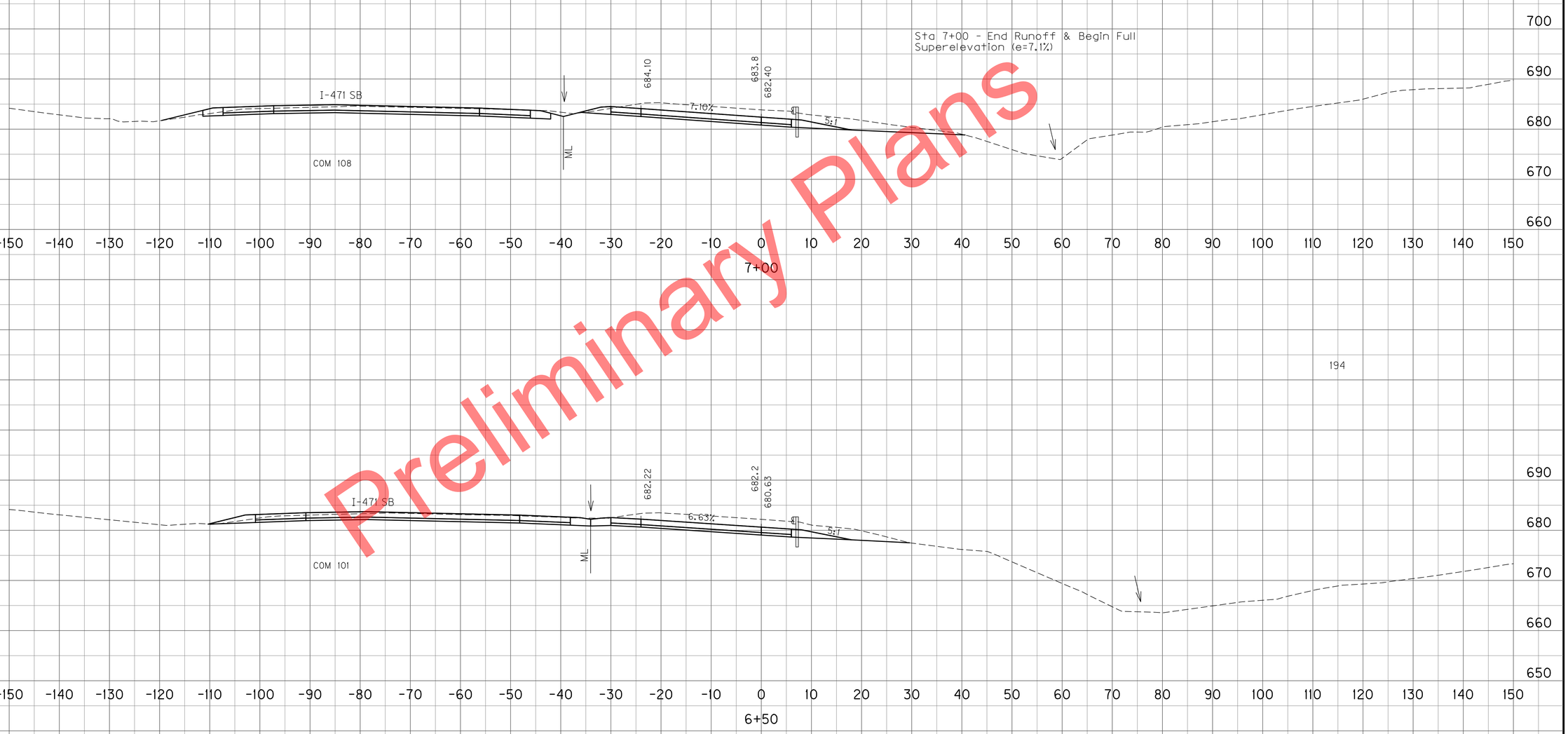

194

Preliminary Plans

SCALE: 1" = 10' HORIZONTAL
1" = 10' VERTICAL

RAMP A
STA. 6+50 TO STA. 7+00

FILE NAME: P:\CIVIL\147IN\6-2021.00\CONTRACT PLANS AND PROPOSAL\CONTRACT PLAN SET\ROADWAY\CROSS SECTIONS.DGN
USER: tvonbehren
DATE PLOTTED: January 2, 2012
E-SHEET NAME:
MicroStation v8.11.7.443

COUNTY OF	ITEM NO.	SHEET NO.
CAMPBELL	6-2021.00	X75

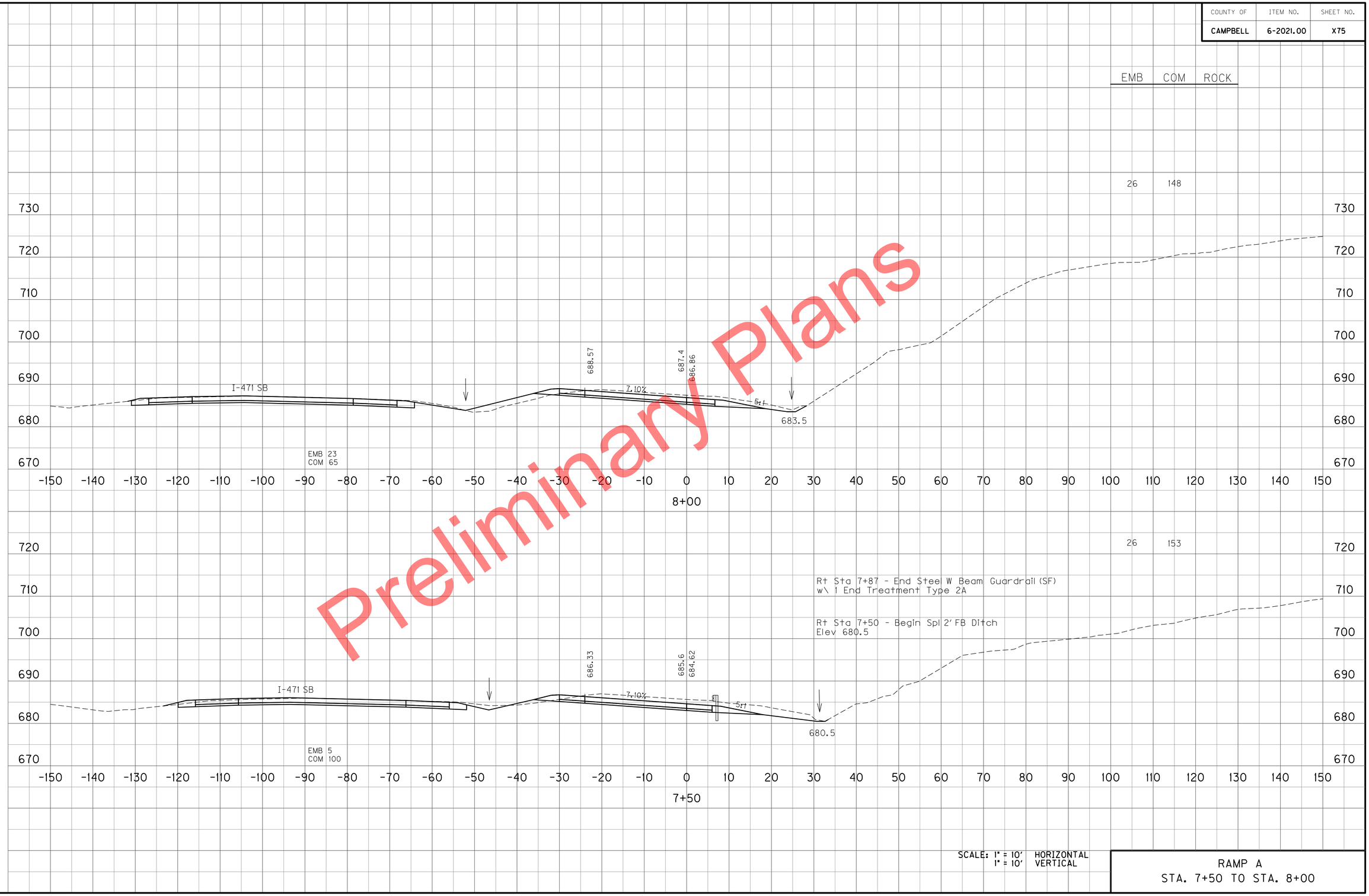

Preliminary Plans

SCALE: 1" = 10' HORIZONTAL
1" = 10' VERTICAL

RAMP A
STA. 7+50 TO STA. 8+00

MicroStation v8.11.7.443
E-SHEET NAME:
USER: tvonbehren
DATE PLOTTED: January 2, 2012
FILE NAME: P:\CIVIL\471\6-2021.00\CONTRACT PLANS AND PROPOSAL\CONTRACT PLAN SET\ROADWAY\CROSS SECTIONS.DGN

COUNTY OF	ITEM NO.	SHEET NO.
CAMPBELL	6-2021.00	X76

EMB	COM	ROCK
7	244	



Preliminary Plans

SCALE: 1" = 10' HORIZONTAL
1" = 10' VERTICAL

RAMP A
STA. 8+50 TO STA. 8+50

FILE NAME: P:\CIVIL\471N6-2021.00\CONTRACT PLANS AND PROPOSAL\CONTRACT PLAN SET\ROADWAY\CROSS SECTIONS.DGN
USER: tvonbehren
DATE PLOTTED: January 2, 2012
E-SHEET NAME:
MicroStation v8.11.7.443

COUNTY OF	ITEM NO.	SHEET NO.
CAMPBELL	6-2021.00	X77

	EMB	COM	ROCK
	7	328	138



Preliminary Plans

SCALE: 1" = 10' HORIZONTAL
1" = 10' VERTICAL

RAMP A
STA. 9+00 TO STA. 9+00

MicroStation v8.11.7.443
E-SHEET NAME:
USER: tvonbehren
DATE PLOTTED: January 2, 2012
FILE NAME: P:\CIVIL\471\6-2021.00\CONTRACT PLANS AND PROPOSAL\CONTRACT PLAN SET\ROADWAY\CROSS SECTIONS.DGN

COUNTY OF	ITEM NO.	SHEET NO.
CAMPBELL	6-2021.00	X78

EMB	COM	ROCK
8	378	260

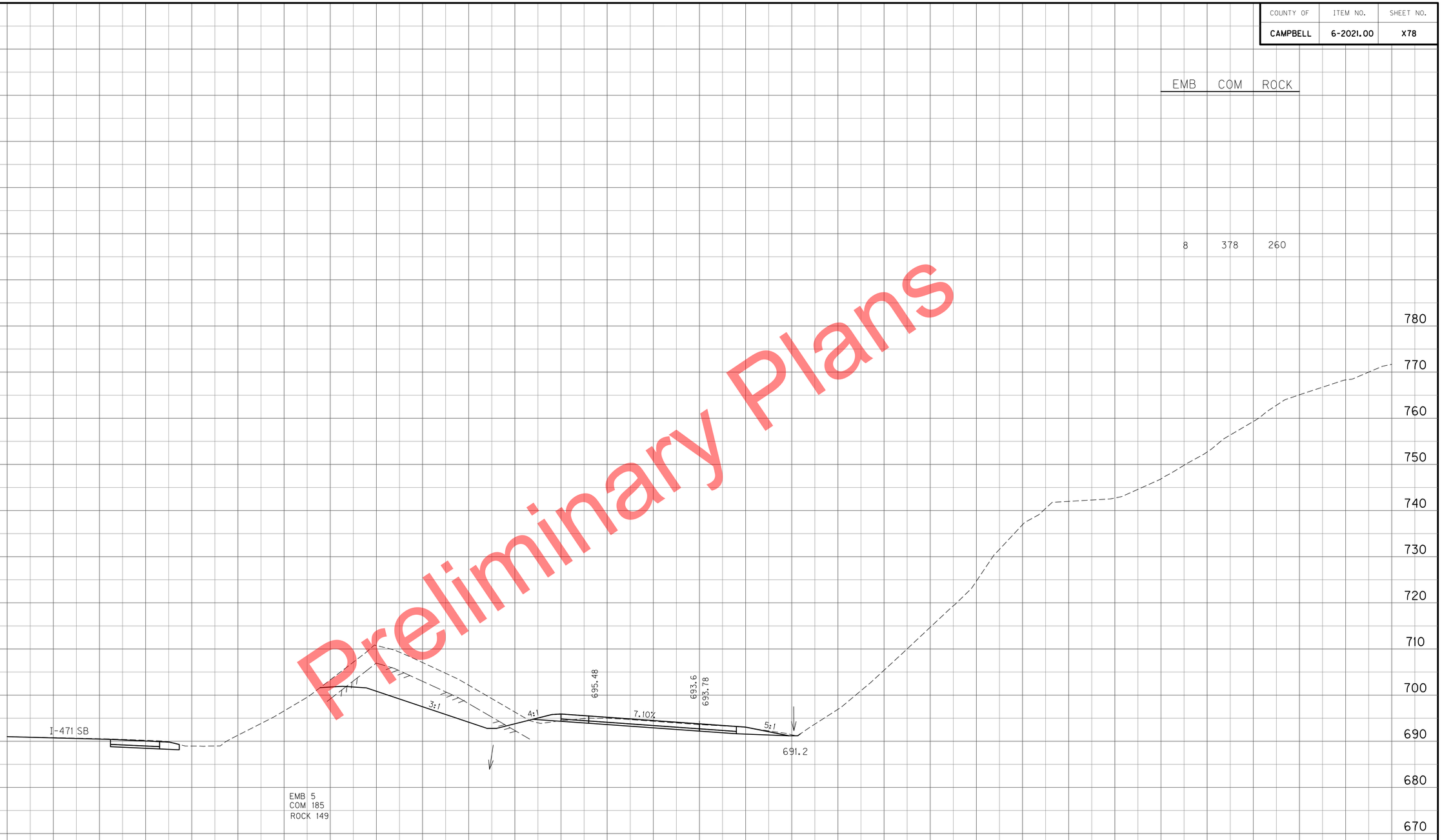

Preliminary Plans

SCALE: 1" = 10' HORIZONTAL
1" = 10' VERTICAL

RAMP A
STA. 9+50 TO STA. 9+50

MicroStation v8.11.7.443
E-SHEET NAME:
USER: tvonbehren
DATE PLOTTED: January 2, 2012
FILE NAME: P:\CIVIL\147\6-2021.00\CONTRACT PLANS AND PROPOSAL\CONTRACT PLAN SET\ROADWAY\CROSS SECTIONS.DGN

COUNTY OF	ITEM NO.	SHEET NO.
CAMPBELL	6-2021.00	X79

	EMB	COM	ROCK
	6	483	231

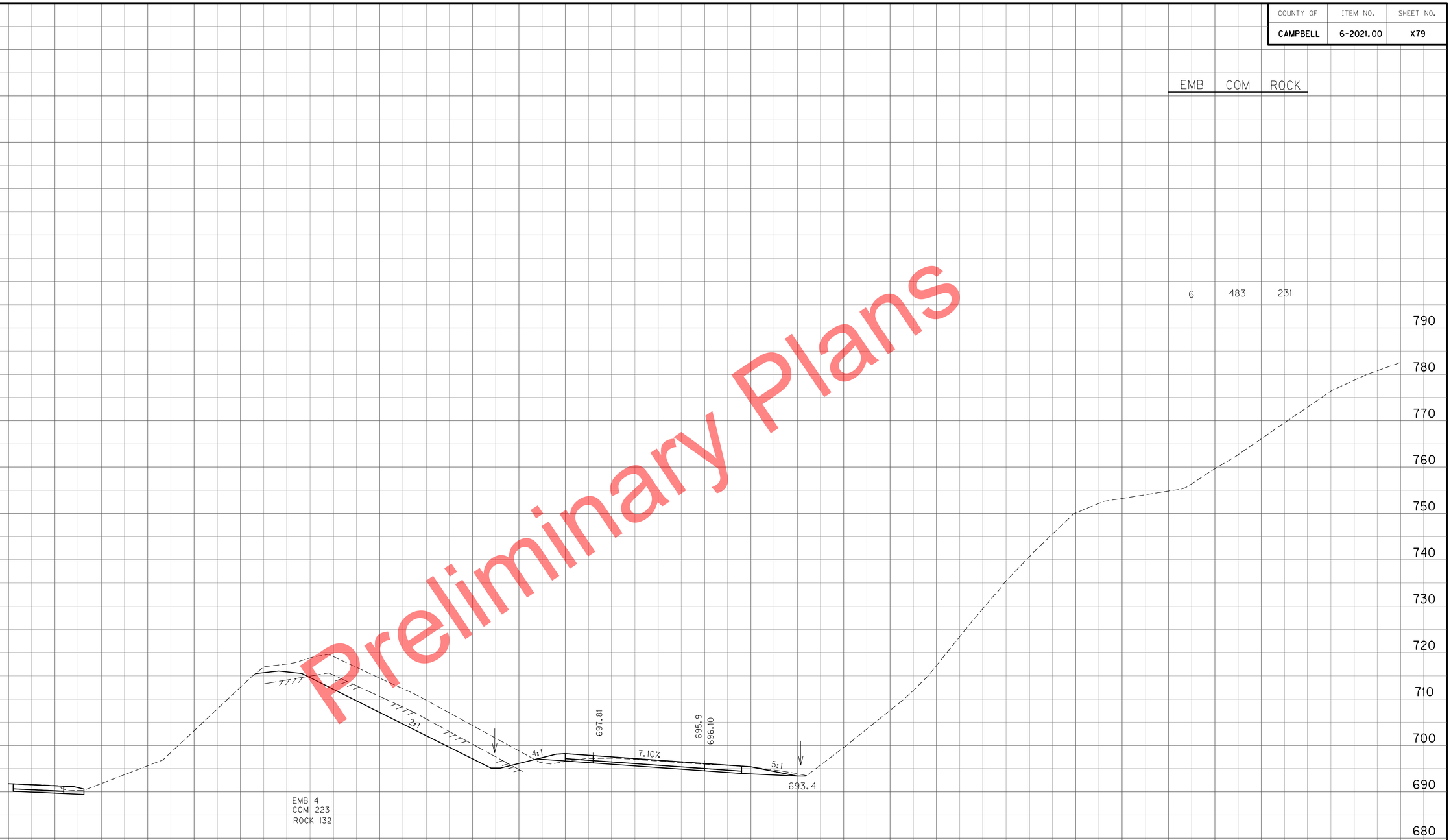

Preliminary Plans

SCALE: 1" = 10' HORIZONTAL
1" = 10' VERTICAL

RAMP A
STA. 10+00 TO STA. 10+00

MicroStation v8.11.7.443
E-SHEET NAME:
USER: tvonbehren
DATE PLOTTED: January 2, 2012
FILE NAME: P:\CIVIL\147\6-2021.00\CONTRACT PLANS AND PROPOSAL\CONTRACT PLAN SET\ROADWAY\CROSS SECTIONS.DGN

COUNTY OF	ITEM NO.	SHEET NO.
CAMPBELL	6-2021.00	X80

EMB	COM	ROCK
5	558	239

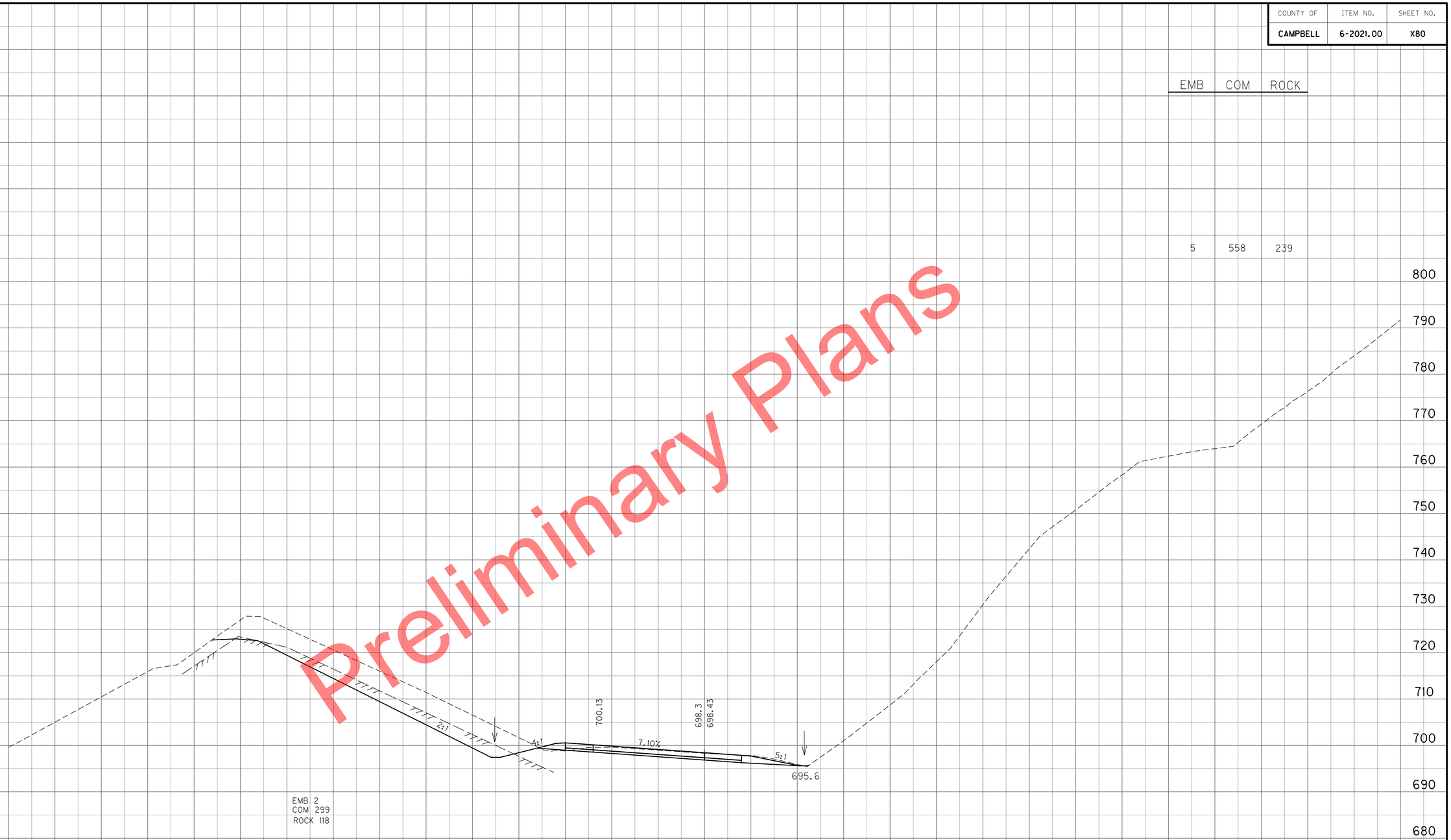

Preliminary Plans

SCALE: 1" = 10' HORIZONTAL
1" = 10' VERTICAL

RAMP A
STA. 10+50 TO STA. 10+50

FILE NAME: P:\CIVIL\147\N6-2021.00\CONTRACT PLANS AND PROPOSAL\CONTRACT PLAN SET\ROADWAY\CROSS SECTIONS.DGN
USER: tvonbehren
DATE PLOTTED: January 2, 2012
E-SHEET NAME:
MicroStation v8.11.7.443

COUNTY OF	ITEM NO.	SHEET NO.
CAMPBELL	6-2021.00	X81

EMB	COM	ROCK
5	611	269

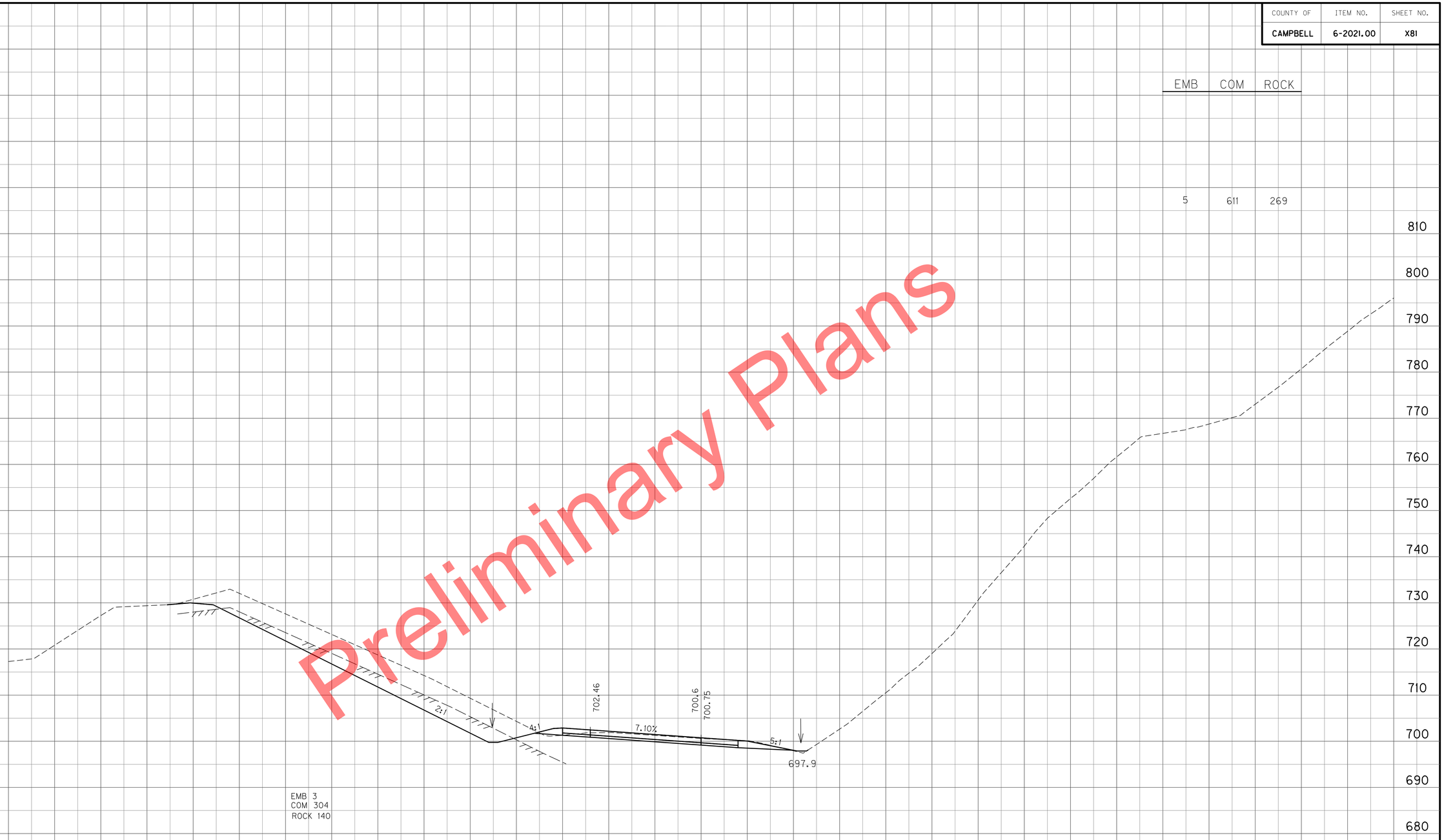

Preliminary Plans

SCALE: 1" = 10' HORIZONTAL
1" = 10' VERTICAL

RAMP A
STA. 11+00 TO STA. 11+00

FILE NAME: P:\CIVIL\147\N6-2021.00\CONTRACT PLANS AND PROPOSAL\CONTRACT PLAN SET\ROADWAY\CROSS SECTIONS.DGN
USER: tvonbehren
DATE PLOTTED: January 2, 2012
E-SHEET NAME:
MicroStation v8.11.7.443

COUNTY OF	ITEM NO.	SHEET NO.
CAMPBELL	6-2021.00	X82

EMB	COM	ROCK
4	715	354

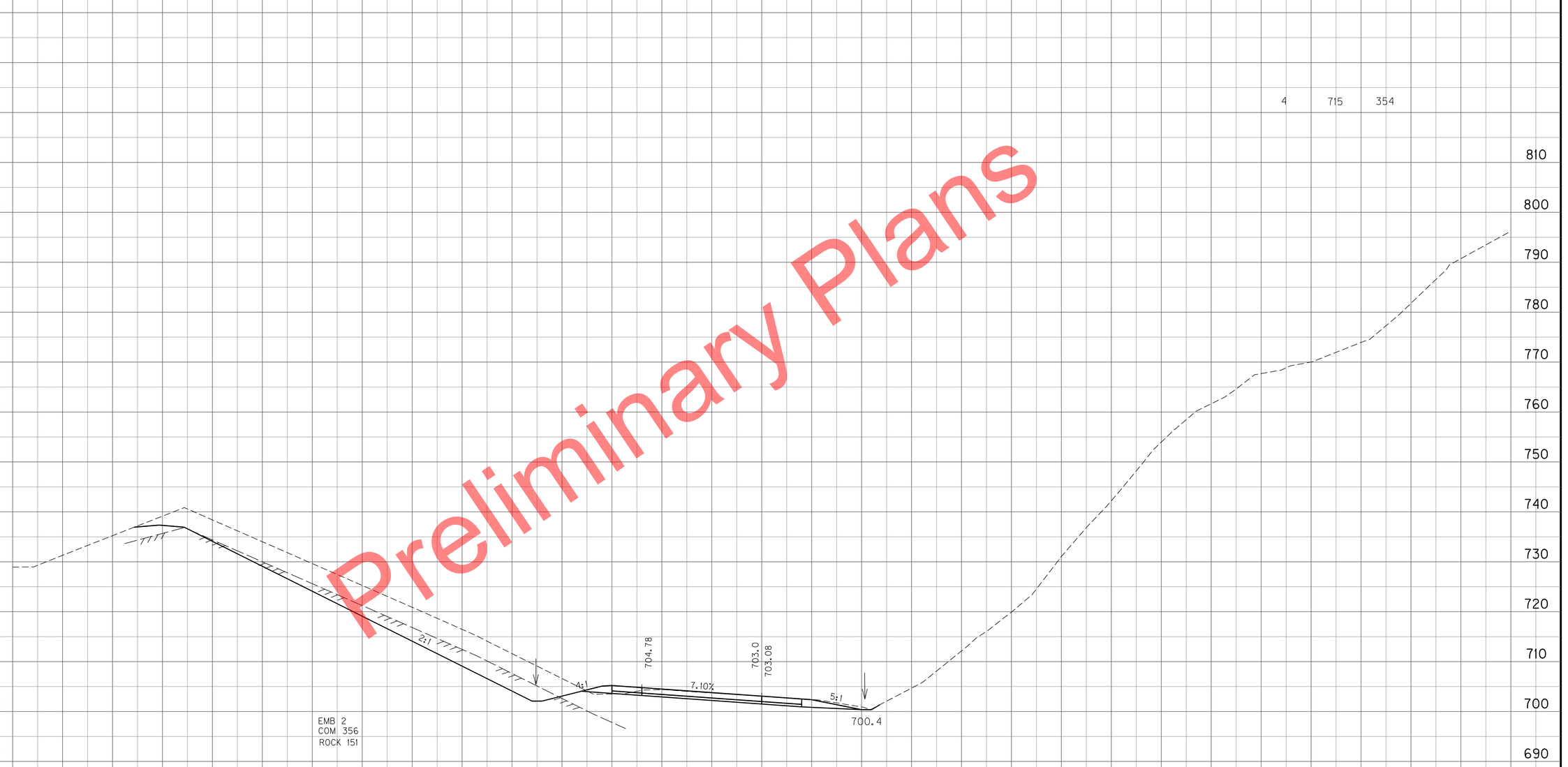

Preliminary Plans

SCALE: 1" = 10' HORIZONTAL
1" = 10' VERTICAL

RAMP A
STA. 11+50 TO STA. 11+50

MicroStation v8.11.7.443 E-SHEET NAME: USER: tvonbehren DATE PLOTTED: January 2, 2012 FILE NAME: P:\CIVIL\147\N6-2021.00\CONTRACT PLANS AND PROPOSAL\CONTRACT PLAN SET\ROADWAY\CROSS SECTIONS.DGN

COUNTY OF	ITEM NO.	SHEET NO.
CAMPBELL	6-2021.00	X83

EMB	COM	ROCK
3	828	597



Preliminary Plans

SCALE: 1" = 10' HORIZONTAL
1" = 10' VERTICAL

RAMP A
STA. 12+00 TO STA. 12+00

MicroStation v8.11.7.443
E-SHEET NAME:
USER: tvonbehren
DATE PLOTTED: January 2, 2012
FILE NAME: P:\CIVIL\147IN6-2021.00\CONTRACT PLANS AND PROPOSAL\CONTRACT PLAN SET\ROADWAY\CROSS SECTIONS.DGN

COUNTY OF	ITEM NO.	SHEET NO.
CAMPBELL	6-2021.00	X84

EMB	COM	ROCK
3	928	626

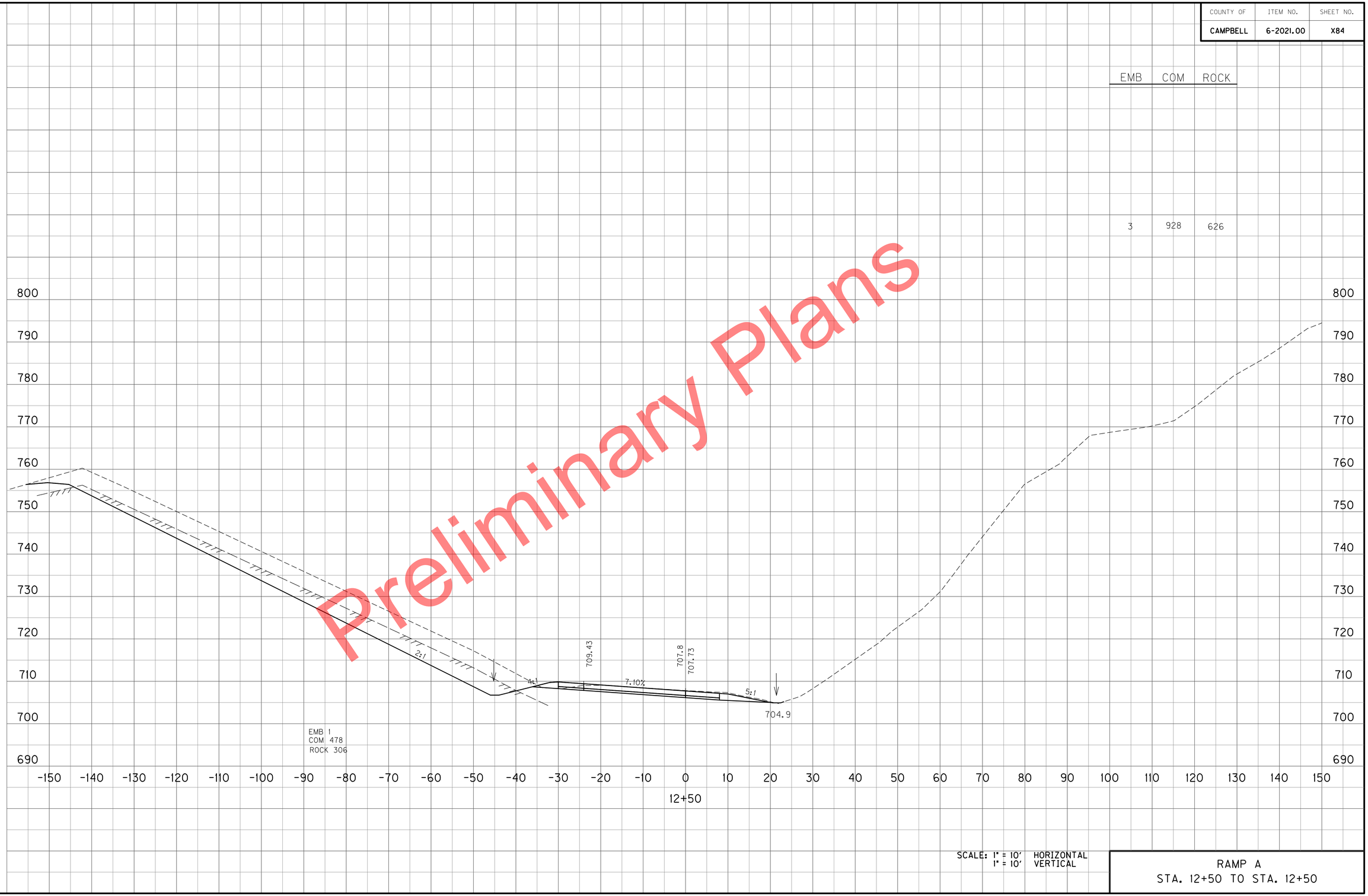

Preliminary Plans

SCALE: 1" = 10' HORIZONTAL
1" = 10' VERTICAL

RAMP A
STA. 12+50 TO STA. 12+50

MicroStation v8.11.7.443
E-SHEET NAME:
USER: tvonbehren
DATE PLOTTED: January 2, 2012
FILE NAME: P:\CIVIL\147\6-2021.00\CONTRACT PLANS AND PROPOSAL\CONTRACT PLAN SET\ROADWAY\CROSS SECTIONS.DGN

COUNTY OF	ITEM NO.	SHEET NO.
CAMPBELL	6-2021.00	X85

EMB	COM	ROCK
3	999	699

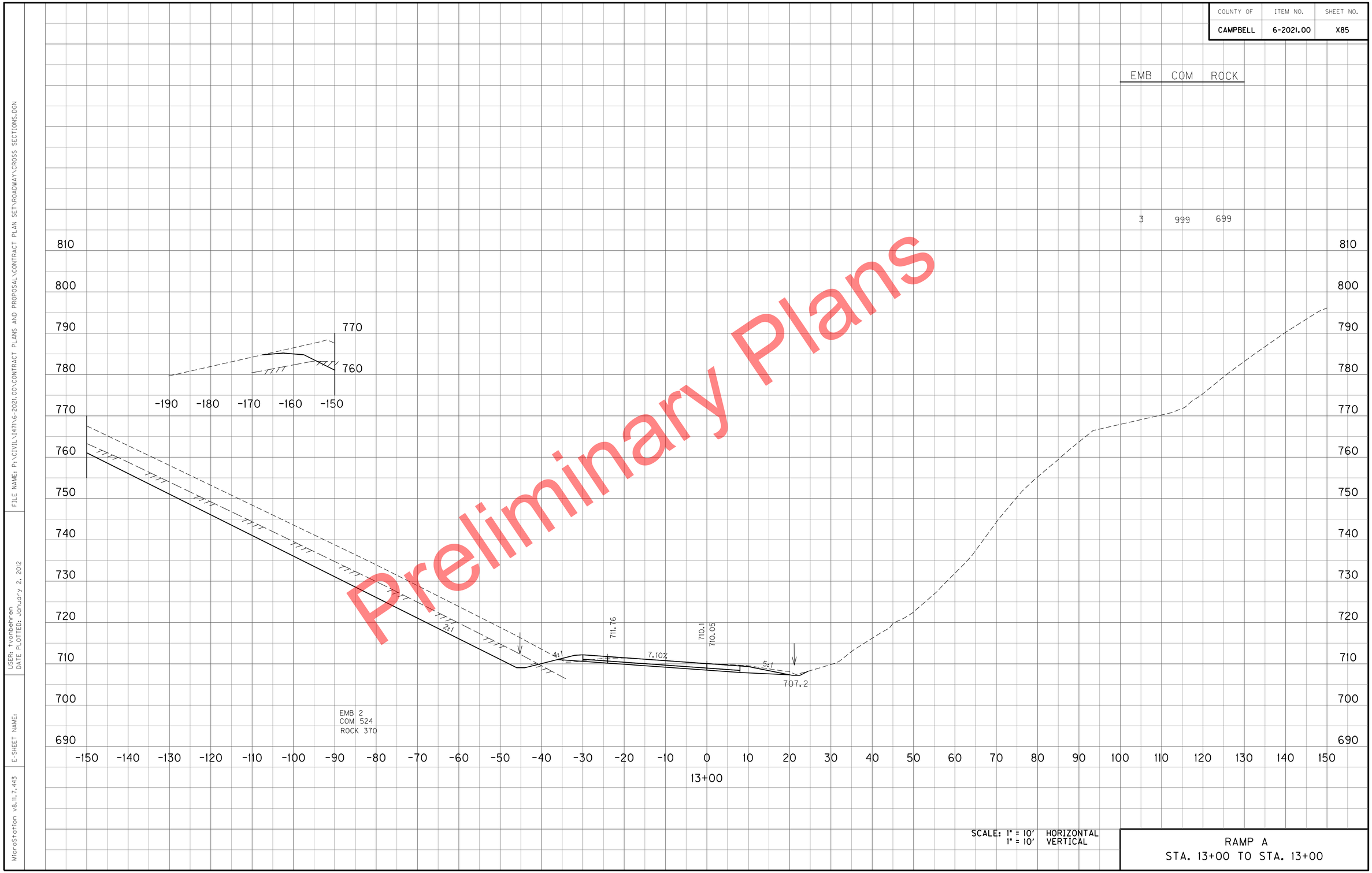

Preliminary Plans

SCALE: 1" = 10' HORIZONTAL
1" = 10' VERTICAL

RAMP A
STA. 13+00 TO STA. 13+00

MicroStation v8.11.7.443
E-SHEET NAME:
USER: tvonbehren
DATE PLOTTED: January 2, 2012
FILE NAME: P:\CIVIL\147IN\6-2021.00\CONTRACT PLANS AND PROPOSAL\CONTRACT PLAN SET\ROADWAY\CROSS SECTIONS.DGN

COUNTY OF	ITEM NO.	SHEET NO.
CAMPBELL	6-2021.00	X86

	EMB	COM	ROCK
2	975	597	



Preliminary Plans

SCALE: 1" = 10' HORIZONTAL
1" = 10' VERTICAL

RAMP A
STA. 13+50 TO STA. 13+50

FILE NAME: P:\CIVIL\147\N6-2021.00\CONTRACT PLANS AND PROPOSAL\CONTRACT PLAN SET\ROADWAY\CROSS SECTIONS.DGN
USER: tvonbehren
DATE PLOTTED: January 2, 2012
E-SHEET NAME:
MicroStation v8.11.7.443

COUNTY OF	ITEM NO.	SHEET NO.
CAMPBELL	6-2021.00	X87

EMB	COM	ROCK
3	827	306



Preliminary Plans

SCALE: 1" = 10' HORIZONTAL
1" = 10' VERTICAL

RAMP A
STA. 14+00 TO STA. 14+00

MicroStation v8.11.7.443
E-SHEET NAME:
USER: tvonbehren
DATE PLOTTED: January 2, 2012
FILE NAME: P:\CIVIL\147IN6-2021.00\CONTRACT PLANS AND PROPOSAL\CONTRACT PLAN SET\ROADWAY\CROSS SECTIONS.DGN

COUNTY OF	ITEM NO.	SHEET NO.
CAMPBELL	6-2021.00	X88

	EMB	COM	ROCK
	3	614	98

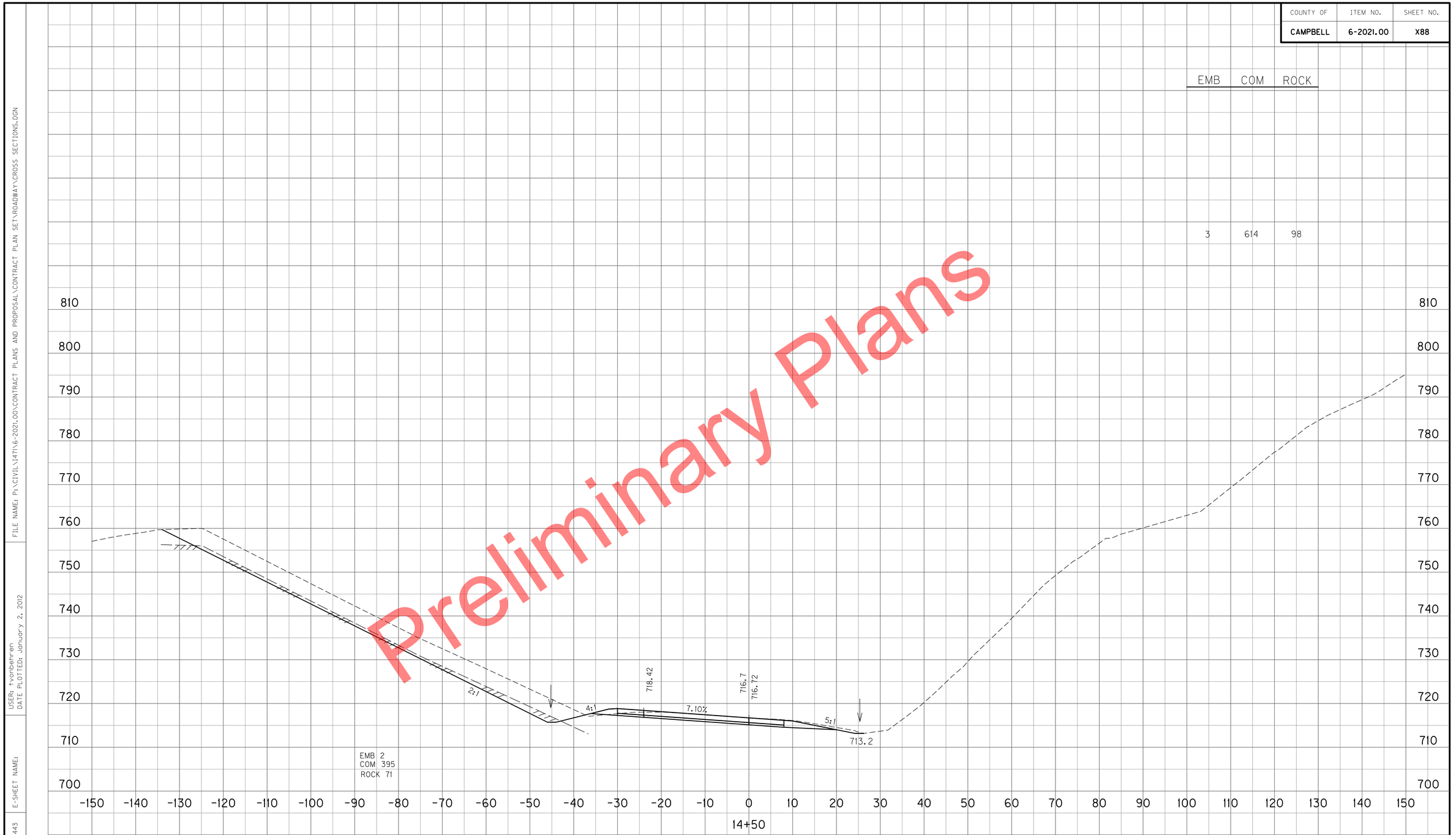

Preliminary Plans

SCALE: 1" = 10' HORIZONTAL
1" = 10' VERTICAL

RAMP A
STA. 14+50 TO STA. 14+50

FILE NAME: P:\CIVIL\147\16-2021.00\CONTRACT PLANS AND PROPOSAL\CONTRACT PLAN SET\ROADWAY\CROSS SECTIONS.DGN
USER: tvonbehren
DATE PLOTTED: January 2, 2012
E-SHEET NAME:
MicroStation v8.11.7.443

COUNTY OF	ITEM NO.	SHEET NO.
CAMPBELL	6-2021.00	X89

EMB	COM	ROCK
3	614	98



Preliminary Plans

SCALE: 1" = 10' HORIZONTAL
1" = 10' VERTICAL

RAMP A
STA. 15+00 TO STA. 15+00

FILE NAME: P:\CIVIL\147\16-2021.00\CONTRACT PLANS AND PROPOSAL\CONTRACT PLAN SET\ROADWAY\CROSS SECTIONS.DGN
USER: tvonbehren
DATE PLOTTED: January 2, 2012
E-SHEET NAME:
MicroStation v8.11.7.443

COUNTY OF	ITEM NO.	SHEET NO.
CAMPBELL	6-2021.00	X90

EMB	COM	ROCK
3	467	131



Preliminary Plans

SCALE: 1" = 10' HORIZONTAL
1" = 10' VERTICAL

RAMP A
STA. 15+50 TO STA. 15+50

FILE NAME: P:\CIVIL\147\N6-2021.00\CONTRACT PLANS AND PROPOSAL\CONTRACT PLAN SET\ROADWAY\CROSS SECTIONS.DGN
USER: tvonbehren
DATE PLOTTED: January 2, 2012
E-SHEET NAME:
MicroStation v8.11.7.443

COUNTY OF	ITEM NO.	SHEET NO.
CAMPBELL	6-2021.00	X91

EMB	COM	ROCK
3	485	127

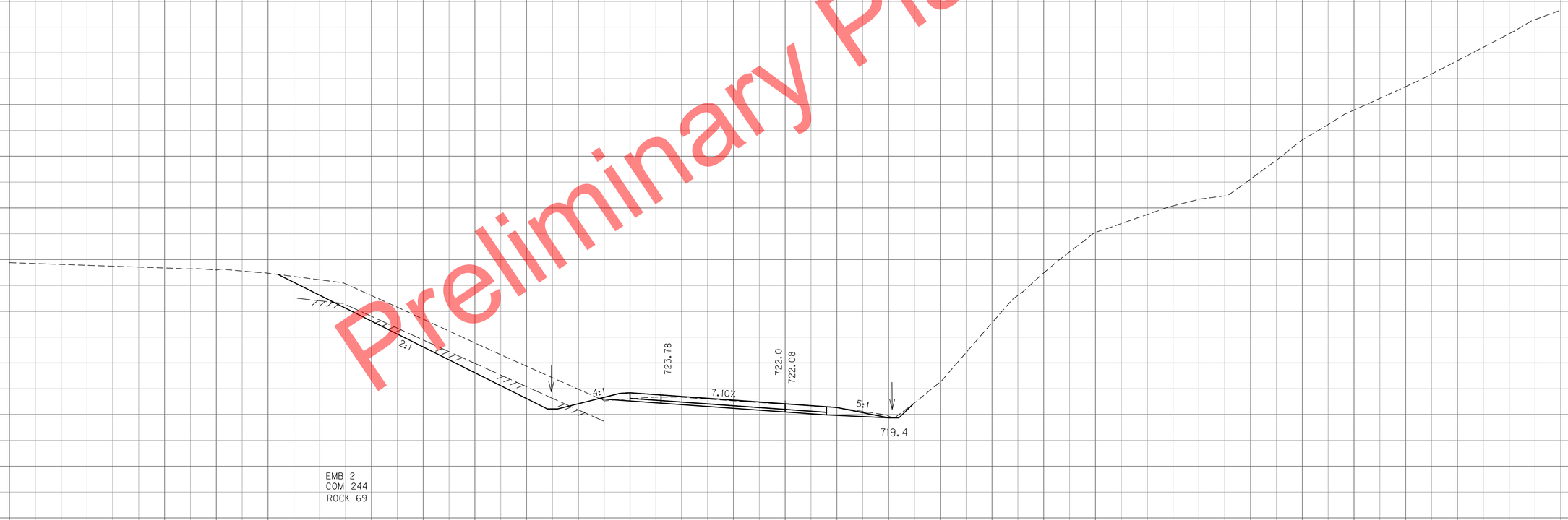

Preliminary Plans

SCALE: 1" =
1" =
HORIZONTAL
VERTICAL

RAMP A
STA. 16+00 TO STA. 16+00

FILE NAME: P:\CIVIL\147\6-2021.00\CONTRACT PLANS AND PROPOSAL\CONTRACT PLAN SET\ROADWAY\CROSS SECTIONS.DGN
USER: tvonbehren
DATE PLOTTED: January 2, 2012
E-SHEET NAME:
MicroStation v8.11.7.443

COUNTY OF	ITEM NO.	SHEET NO.
CAMPBELL	6-2021.00	X92

EMB	COM	ROCK
2	592	181



Preliminary Plans

SCALE: 1" = 10' HORIZONTAL
1" = 10' VERTICAL

RAMP A
STA. 16+50 TO STA. 16+50

FILE NAME: P:\CIVIL\147N6-2021.00\CONTRACT PLANS AND PROPOSAL\CONTRACT PLAN SET\ROADWAY\CROSS SECTIONS.DGN
USER: tvonbehren
DATE PLOTTED: January 2, 2012
E-SHEET NAME:
MicroStation v8.11.7.443

COUNTY OF	ITEM NO.	SHEET NO.
CAMPBELL	6-2021.00	X93

	EMB	COM	ROCK
2	675	258	

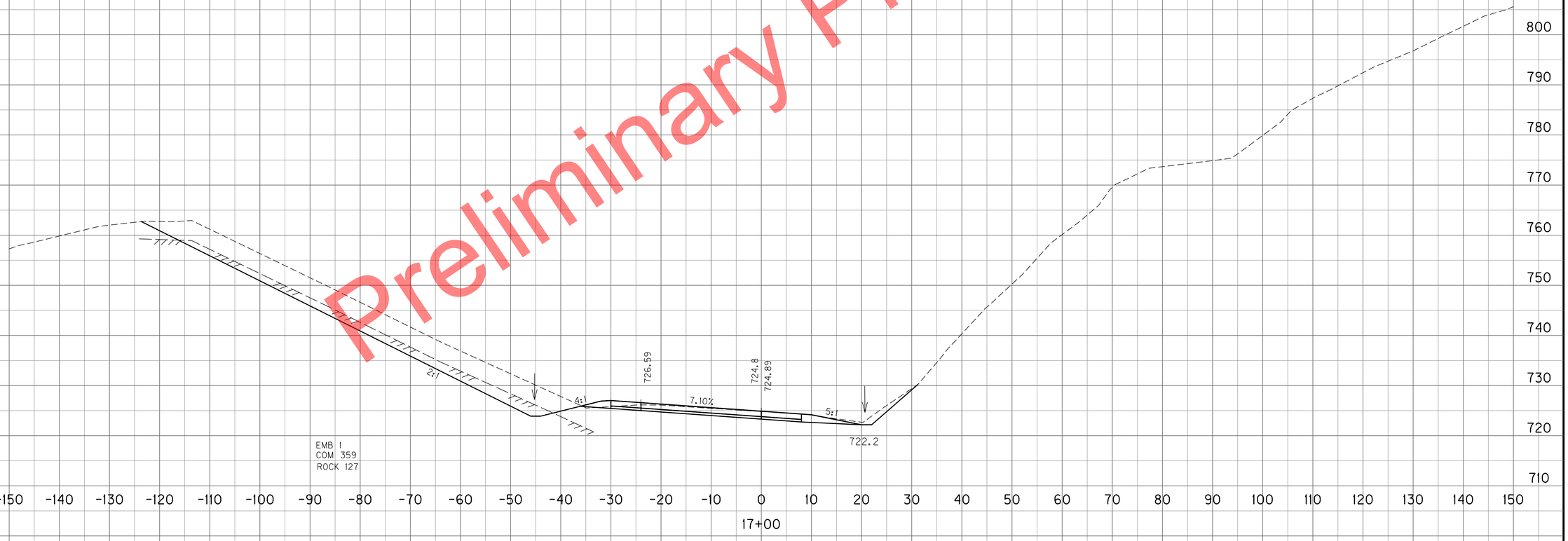

Preliminary Plans

SCALE: 1" = 10' HORIZONTAL
1" = 10' VERTICAL

RAMP A
STA. 17+00 TO STA. 17+00

MicroStation v8.11.7.443 | E-SHEET NAME: | USER: tvonbehren | DATE PLOTTED: January 2, 2012 | FILE NAME: P:\CIVIL\147\6-2021.00\CONTRACT PLANS AND PROPOSAL\CONTRACT PLAN SET\ROADWAY\CROSS SECTIONS.DGN

COUNTY OF	ITEM NO.	SHEET NO.
CAMPBELL	6-2021.00	X94

	EMB	COM	ROCK
2	625	273	



Preliminary Plans

SCALE: 1" = 10' HORIZONTAL
1" = 10' VERTICAL

RAMP A
STA. 17+50 TO STA. 17+50

FILE NAME: P:\CIVIL\147\N6-2021.00\CONTRACT PLANS AND PROPOSAL\CONTRACT PLAN SET\ROADWAY\CROSS SECTIONS.DGN
USER: tvonbehren
DATE PLOTTED: January 2, 2012
E-SHEET NAME:
MicroStation v8.11.7.443

COUNTY OF	ITEM NO.	SHEET NO.
CAMPBELL	6-2021.00	X95

	EMB	COM	ROCK
	2	477	148



Preliminary Plans

SCALE: 1" = 10' HORIZONTAL
1" = 10' VERTICAL

RAMP A
STA. 18+00 TO STA. 18+00

FILE NAME: P:\CIVIL\147IN6-2021.00\CONTRACT PLANS AND PROPOSAL\CONTRACT PLAN SET\ROADWAY\CROSS SECTIONS.DGN
USER: tvonbehren
DATE PLOTTED: January 2, 2012
E-SHEET NAME:
MicroStation v8.11.7.443

COUNTY OF	ITEM NO.	SHEET NO.
CAMPBELL	6-2021.00	X96

EMB	COM	ROCK
2	239	8



Preliminary Plans

SCALE: 1" = 10' HORIZONTAL
1" = 10' VERTICAL

RAMP A
STA. 18+50 TO STA. 18+50

MicroStation v8.11.7.443
E-SHEET NAME:
USER: tvonbehren
DATE PLOTTED: January 2, 2012
FILE NAME: P:\CIVIL\147\6-2021.00\CONTRACT PLANS AND PROPOSAL\CONTRACT PLAN SET\ROADWAY\CROSS SECTIONS.DGN

COUNTY OF	ITEM NO.	SHEET NO.
CAMPBELL	6-2021.00	X97

	EMB	COM	ROCK
1	92		

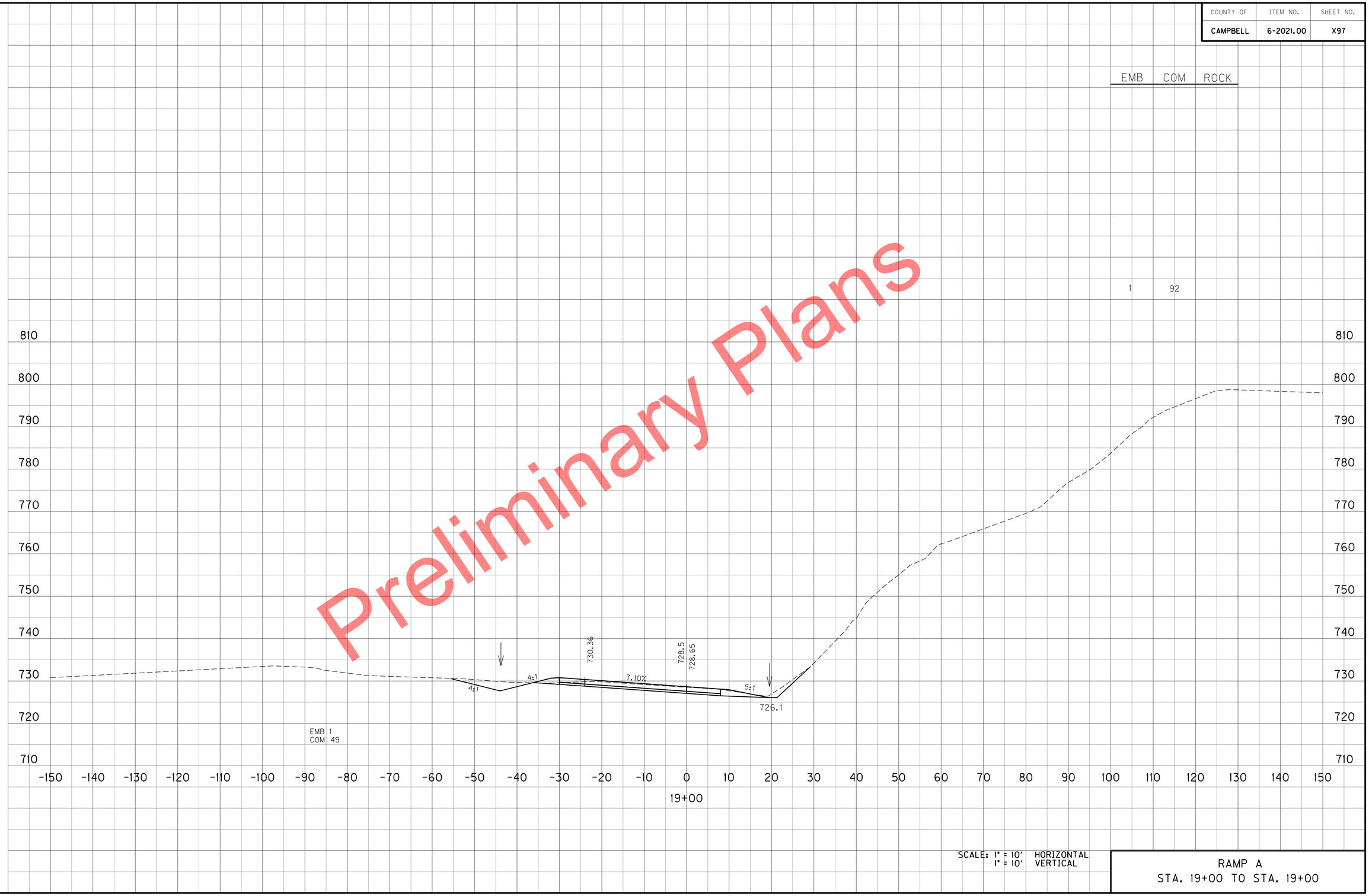

Preliminary Plans

SCALE: 1" = 10' HORIZONTAL
1" = 10' VERTICAL

RAMP A
STA. 19+00 TO STA. 19+00

FILE NAME: P:\CIVIL\147\N6-2021.00\CONTRACT PLANS AND PROPOSAL\CONTRACT PLAN SET\ROADWAY\CROSS SECTIONS.DGN
USER: tvonbehren
DATE PLOTTED: January 2, 2012
E-SHEET NAME:
MicroStation v8.11.7.443

COUNTY OF	ITEM NO.	SHEET NO.
CAMPBELL	6-2021.00	X98

EMB	COM	ROCK
	81	

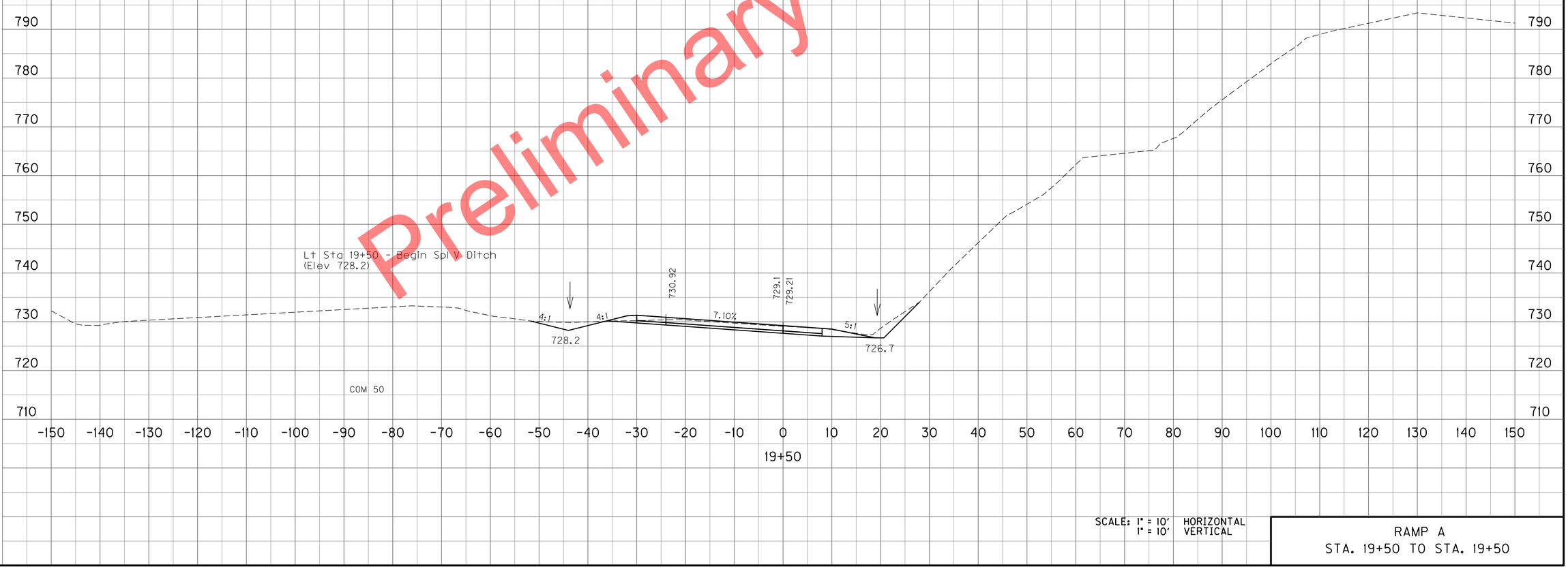

Preliminary Plans

SCALE: 1" = 10' HORIZONTAL
1" = 10' VERTICAL

RAMP A
STA. 19+50 TO STA. 19+50

MicroStation v8.11.7.443
E-SHEET NAME:
USER: tvanbehren
DATE PLOTTED: January 2, 2012
FILE NAME: P:\CIVIL\147\6-2021.00\CONTRACT PLANS AND PROPOSAL\CONTRACT PLAN SET\ROADWAY\CROSS SECTIONS.DGN

COUNTY OF	ITEM NO.	SHEET NO.
CAMPBELL	6-2021.00	X99

EMB	COM	ROCK
	56	



Preliminary Plans

SCALE: 1" = 10' HORIZONTAL
1" = 10' VERTICAL

RAMP A
STA. 20+00 TO STA. 20+00

MicroStation v8.11.7.443 E-SHEET NAME: USER: tvonbehren DATE PLOTTED: January 2, 2012 FILE NAME: P:\CIVIL\147\6-2021.00\CONTRACT PLANS AND PROPOSAL\CONTRACT PLAN SET\ROADWAY\CROSS SECTIONS.DGN

COUNTY OF	ITEM NO.	SHEET NO.
CAMPBELL	6-2021.00	X100

EMB	COM	ROCK
	54	

Preliminary Plans

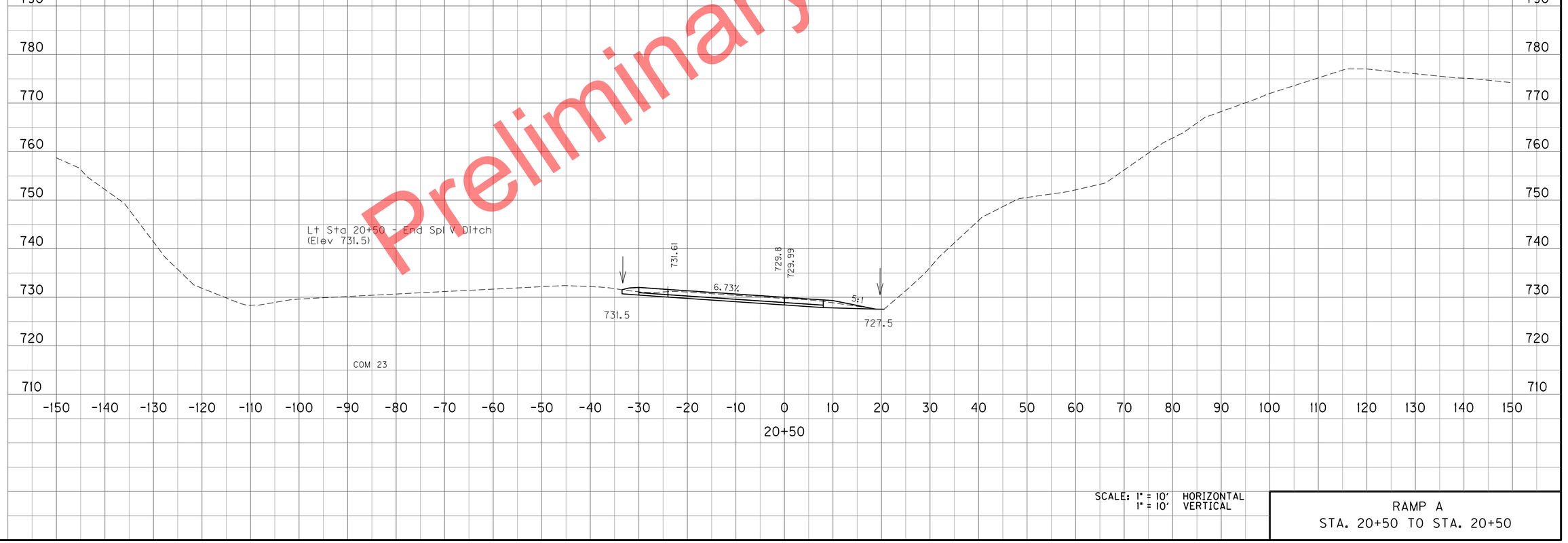

SCALE: 1" = 10' HORIZONTAL
1" = 10' VERTICAL

RAMP A
STA. 20+50 TO STA. 20+50

FILE NAME: P:\CIVIL\147\N6-2021.00\CONTRACT PLANS AND PROPOSAL\CONTRACT PLAN SET\ROADWAY\CROSS SECTIONS.DGN
USER: tvonbehren
DATE PLOTTED: January 2, 2012
E-SHEET NAME:
MicroStation v8.11.7.443

COUNTY OF	ITEM NO.	SHEET NO.
CAMPBELL	6-2021.00	X101

	EMB	COM	ROCK
TOTALS : RAMP A STA 0+00 TO STA 23+90.66	135	13946	5639



Preliminary Plans

SCALE: 1" = 10' HORIZONTAL
1" = 10' VERTICAL

RAMP A
STA. 21+00 TO STA. 21+50

FILE NAME: P:\CIVIL\147IN6-2021.00\CONTRACT PLANS AND PROPOSAL\CONTRACT PLAN SET\ROADWAY\CROSS SECTIONS.DGN
USER: tvonbehren
DATE PLOTTED: January 2, 2012
E-SHEET NAME:
MicroStation v8.11.7.443

COUNTY OF	ITEM NO.	SHEET NO.
CAMPBELL	6-2021.00	X102

Preliminary Plans

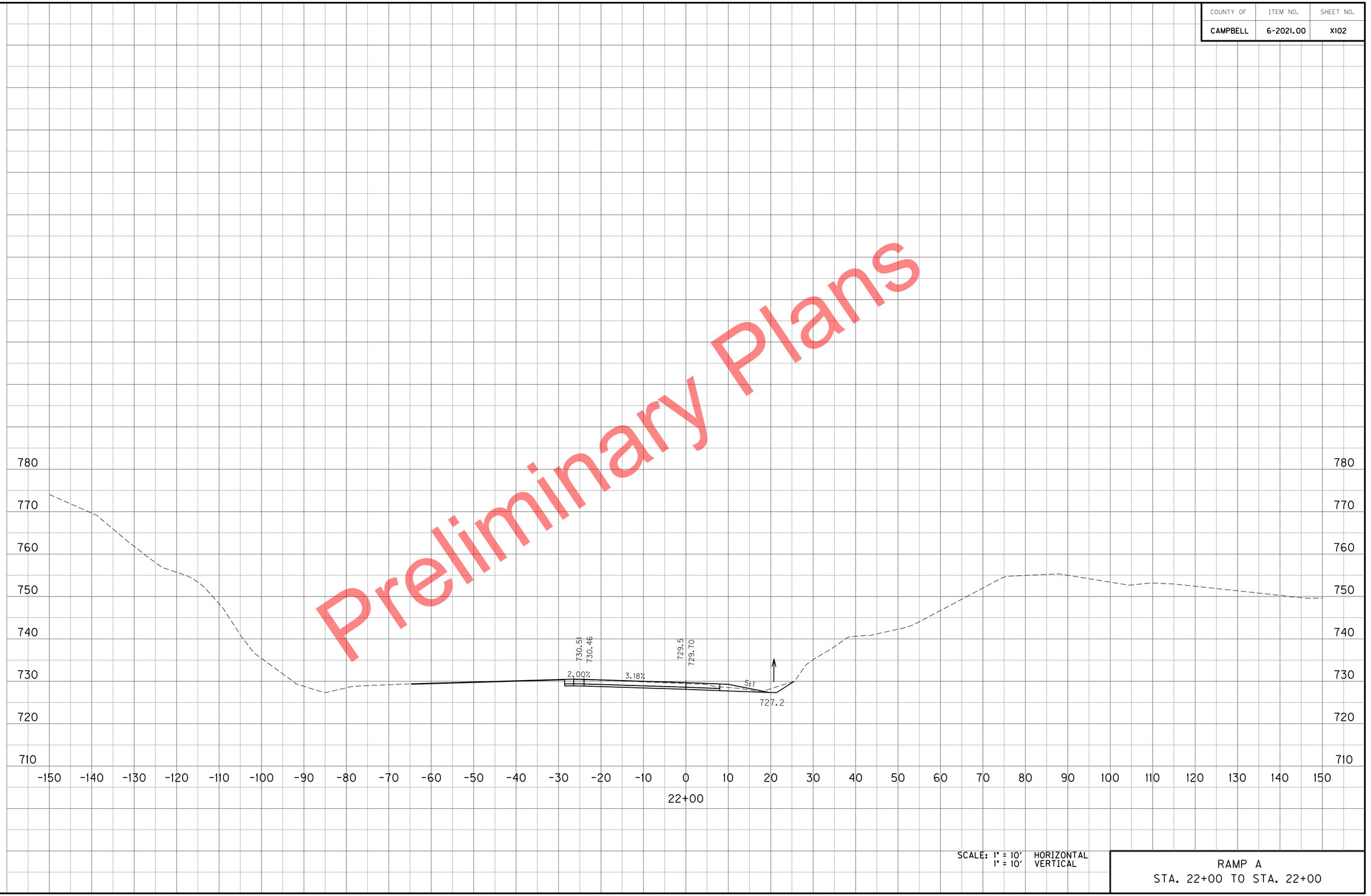

SCALE: 1" = 10' HORIZONTAL
1" = 10' VERTICAL

RAMP A
STA. 22+00 TO STA. 22+00

MicroStation v8.11.7.443
E-SHEET NAME:
USER: tvonbehren
DATE PLOTTED: January 2, 2012
FILE NAME: P:\CIVIL\147\6-2021.00\CONTRACT PLANS AND PROPOSAL\CONTRACT PLAN SET\ROADWAY\CROSS SECTIONS.DGN

COUNTY OF	ITEM NO.	SHEET NO.
CAMPBELL	6-2021.00	X103

STA 23+90.66 ~ END
RAMP A

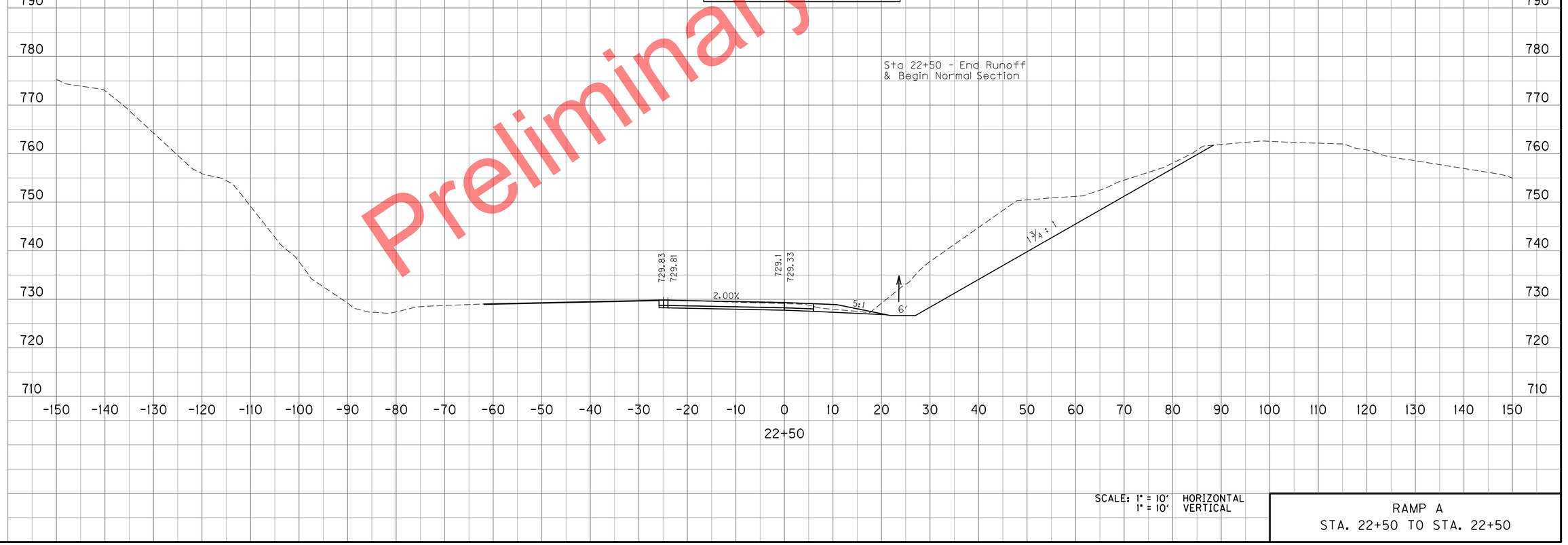

Preliminary Plans

SCALE: 1" = 10' HORIZONTAL
1" = 10' VERTICAL

RAMP A
STA. 22+50 TO STA. 22+50

FILE NAME: P:\CIVIL\147\N6-2021.00\CONTRACT PLANS AND PROPOSAL\CONTRACT PLAN SET\ROADWAY\CROSS SECTIONS.DGN
USER: tvonbehren
DATE PLOTTED: January 2, 2012
E-SHEET NAME:
MicroStation v8.11.7.443